Compal Confidential

Schematics Document

Intel CLARKSFIELD/ARRANDALE
with IBEX PEAK-M core logic

Cartier DIS

LA-4901P

2009-12-01

REV:1.0

機密	等級	硬體二部	
		產出人員	
		產出日期	
		解密日期	

Security Classification	Compal Secret Data		
Issued Date	2008/09/15	Deciphered Date	2009/12/31

THIS SHEET OF ENGINEERING DRAWING IS THE PROPRIETARY PROPERTY OF COMPAL ELECTRONICS, INC. AND CONTAINS CONFIDENTIAL AND TRADE SECRET INFORMATION. THIS SHEET MAY NOT BE TRANSFERED FROM THE CUSTODY OF THE COMPETENT DIVISION OF R&D DEPARTMENT EXCEPT AS AUTHORIZED BY COMPAL ELECTRONICS, INC. NEITHER THIS SHEET NOR THE INFORMATION IT CONTAINS MAY BE USED BY OR DISCLOSED TO ANY THIRD PARTY WITHOUT PRIOR WRITTEN CONSENT OF COMPAL ELECTRONICS, INC.

Compal Electronics, Inc.

Title: *Cover Sheet*

Size: Custom | Document Number: *LA-4901P* | Rev: 1.0

Date: Tuesday, December 15, 2009 | Sheet 1 of 54

Compal Confidential
File Name : LA-4901P

Cartier DIS

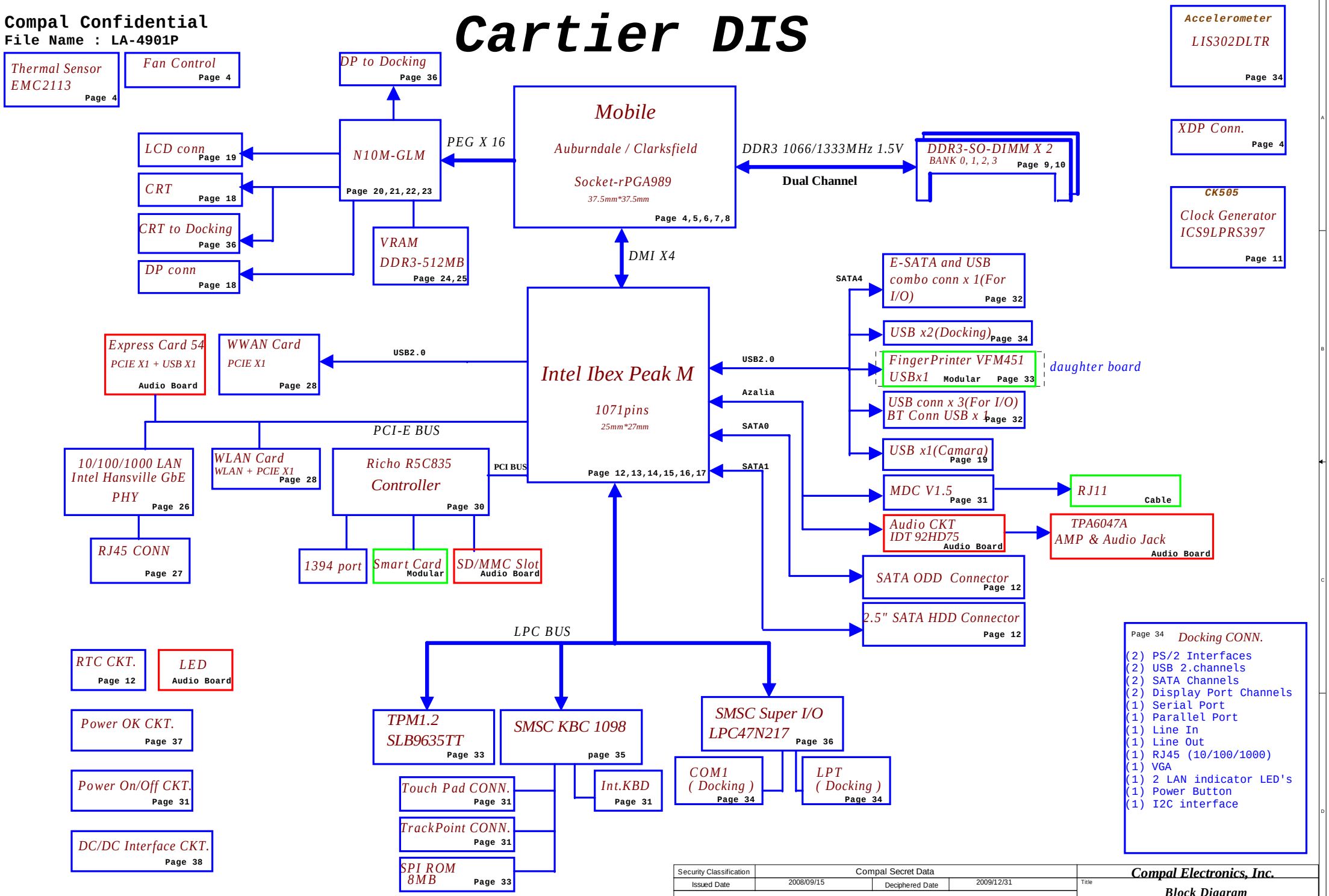

Security Classification	Compal Secret Data		
Issued Date	2008/09/15	Deciphered Date	2009/12/31

THIS SHEET OF ENGINEERING DRAWING IS THE PROPRIETARY PROPERTY OF COMPAL ELECTRONICS, INC. AND CONTAINS CONFIDENTIAL AND TRADE SECRET INFORMATION. THIS SHEET MAY NOT BE TRANSFERED FROM THE CUSTODY OF THE COMPETENT DIVISION OF R&D DEPARTMENT EXCEPT AS AUTHORIZED BY COMPAL ELECTRONICS, INC. NEITHER THIS SHEET NOR THE INFORMATION IT CONTAINS MAY BE USED BY OR DISCLOSED TO ANY THIRD PARTY WITHOUT PRIOR WRITTEN CONSENT OF COMPAL ELECTRONICS, INC.

Compal Electronics, Inc.

Title: Block Diagram

Size: Custom | Document Number: LA-4901P | Rev: 1.0

Date: Tuesday, December 15, 2009 | Sheet 2 of 54

Voltage Rails

(O MEANS ON X MEANS OFF)

power plane / State	+RTCVCC	+B +3VL	+5VALW +3VALW	+3VM +1.05VM	+1.5V +0.75V	+5VS +3VS +1.5VS +VGA_CORE +VCCP +CPU_CORE +1.05VS +1.8VS
S0	O	O	O	O	O	O
S1	O	O	O	O	O	O
S3	O	O	O	O	O	X
S5 S4/AC	O	O	O	O	X	X
S5 S4/ Battery only	O	O	X	X	X	X
S5 S4/AC & Battery don't exist	O	X	X	X	X	X

Symbol Note :

: means Digital Ground

: means Analog Ground

Install below 45 level BOM structure

45@ : means just put it in the BOM of 45 level.

Install below 43 level BOM structure

@ : means just reserve , no build
CONN@ : means ME part.
VRAM@ : means VRAM strip pin part.

SMBUS Control Table

	SOURCE	BATT	XDP	SODIMM	CLK CHIP	MINI CARD	DOCK	NIC	THERMAL SENSOR	G-SENSOR
SMB_EC_CK1 SMB_EC_DA1	SMSC1098	V	X	X	X	X	X	X	X	X
SMBCLK SMBDATA	Calpella	X	V	V	V	V	V	X	X	V
SML0CLK SML0DATA	Calpella	X	X	X	X	X	X	V	X	X
SML1CLK SML1DATA	Calpella	X	X	X	X	X	X	X	V	X

Security Classification	Compal Secret Data		
Issued Date	2008/09/15	Deciphered Date	2009/12/31

THIS SHEET OF ENGINEERING DRAWING IS THE PROPRIETARY PROPERTY OF COMPAL ELECTRONICS, INC. AND CONTAINS CONFIDENTIAL AND TRADE SECRET INFORMATION. THIS SHEET MAY NOT BE TRANSFERED FROM THE CUSTODY OF THE COMPETENT DIVISION OF R&D DEPARTMENT EXCEPT AS AUTHORIZED BY COMPAL ELECTRONICS, INC. NEITHER THIS SHEET NOR THE INFORMATION IT CONTAINS MAY BE USED BY OR DISCLOSED TO ANY THIRD PARTY WITHOUT PRIOR WRITTEN CONSENT OF COMPAL ELECTRONICS, INC.

Compal Electronics, Inc.

Title: **Notes List**

Size	Document Number	Rev
Custom	LA-4901P	1.0

Date: Tuesday, December 15, 2009 Sheet 3 of 54

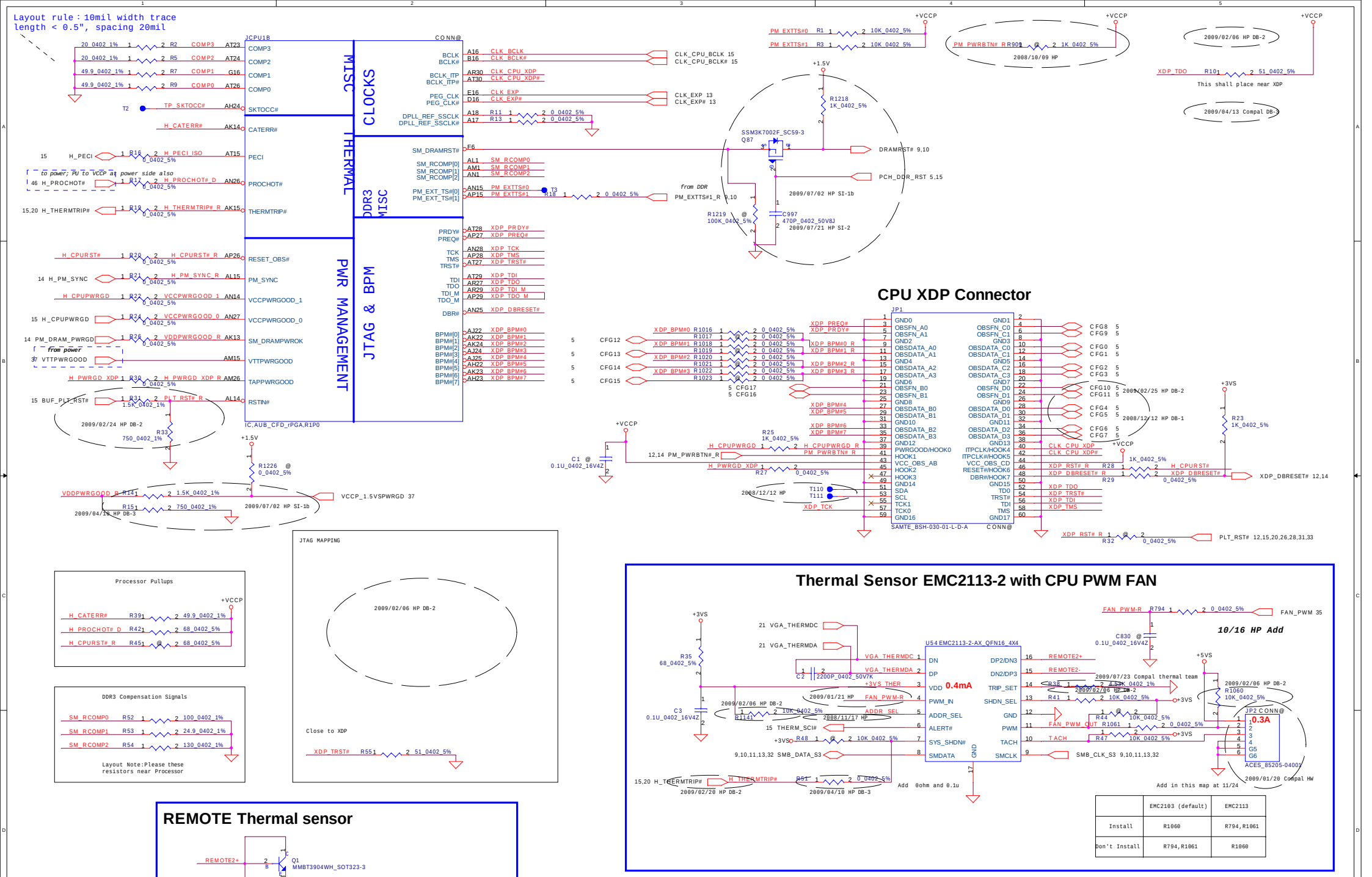

	EMC2103 (default)	EMC2113
Install	R1060	R794,R1061
Don't Install	R794,R1061	R1060

Security Classification	Compal Secret Data		
Issued Date	2008/09/15	Deciphered Date	2009/12/31

THIS SHEET OF ENGINEERING DRAWING IS THE PROPRIETARY PROPERTY OF COMPAL ELECTRONICS, INC. AND CONTAINS CONFIDENTIAL AND TRADE SECRET INFORMATION. THIS SHEET MAY NOT BE TRANSFERED FROM THE CUSTODY OF THE COMPETENT DIVISION OF R&D DEPARTMENT EXCEPT AS AUTHORIZED BY COMPAL ELECTRONICS, INC. NEITHER THIS SHEET NOR THE INFORMATION IT CONTAINS MAY BE USED BY OR DISCLOSED TO ANY THIRD PARTY WITHOUT PRIOR WRITTEN CONSENT OF COMPAL ELECTRONICS, INC.

Compal Electronics, Inc.

Title: ARD/CFD(1/5)-Thermal/XDP

Size	Document Number	Rev
Custom	LA-4901P	1.0

Date: Tuesday, December 15, 2009 | Sheet 4 of 54

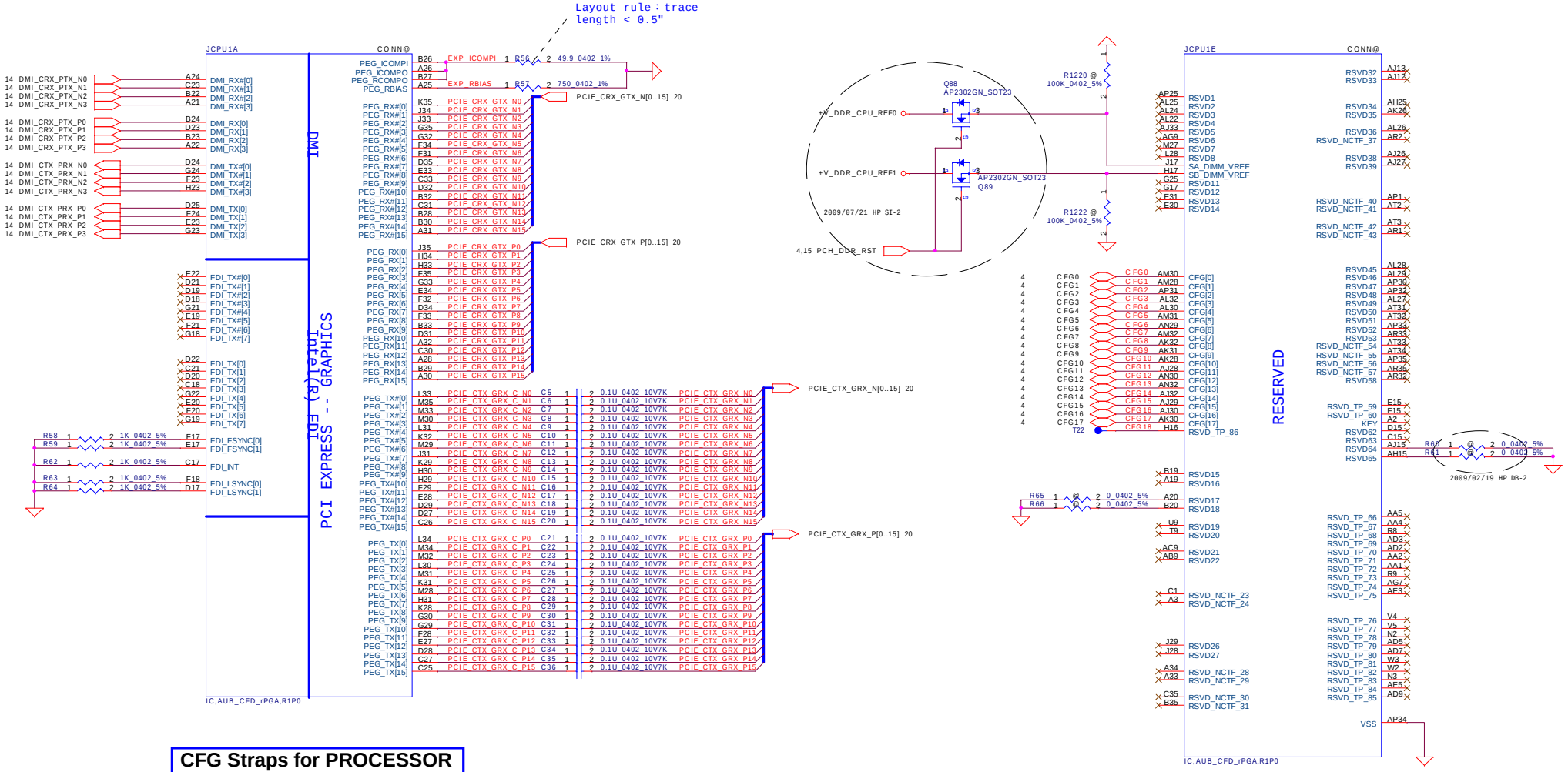

CFG Straps for PROCESSOR

CFG0 R67 1 @ 2 3.01K 0402 1%

PCI-Express Configuration Select	
CFG0	1: Single PEG 0: Bifurcation enabled

Not applicable for Clarksfield Processor

CFG3 R69 1 2 3.01K 0402 1%

CFG3-PCI Express Static Lane Reversal	
CFG3	1: Normal Operation 0: Lane Numbers Reversed 15 -> 0, 14 ->1, ...

CFG4 R70 1 @ 2 3.01K 0402 1%

CFG4-Display Port Presence	
CFG4	1: Disabled; No Physical Display Port attached to Embedded Display Port 0: Enabled; An external Display Port device is connected to the Embedded Display Port

CFG7 R68 1 @ 2 3.01K 0402 1%

Only temporary for early CFD samples (rPGA/BGA)

Security Classification	Compal Secret Data		
Issued Date	2008/09/15	Deciphered Date	2009/12/31

THIS SHEET OF ENGINEERING DRAWING IS THE PROPRIETARY PROPERTY OF COMPAL ELECTRONICS, INC. AND CONTAINS CONFIDENTIAL AND TRADE SECRET INFORMATION. THIS SHEET MAY NOT BE TRANSFERED FROM THE CUSTODY OF THE COMPETENT DIVISION OF R&D DEPARTMENT EXCEPT AS AUTHORIZED BY COMPAL ELECTRONICS, INC. NEITHER THIS SHEET NOR THE INFORMATION IT CONTAINS MAY BE USED BY OR DISCLOSED TO ANY THIRD PARTY WITHOUT PRIOR WRITTEN CONSENT OF COMPAL ELECTRONICS, INC.

Compal Electronics, Inc.

Title: **ARD/CFD(2/5)-DMI/PEG/FDI**

Size	Document Number	Rev
Custom	LA-4901P	1.0

Date: Tuesday, December 15, 2009 | Sheet 5 of 54

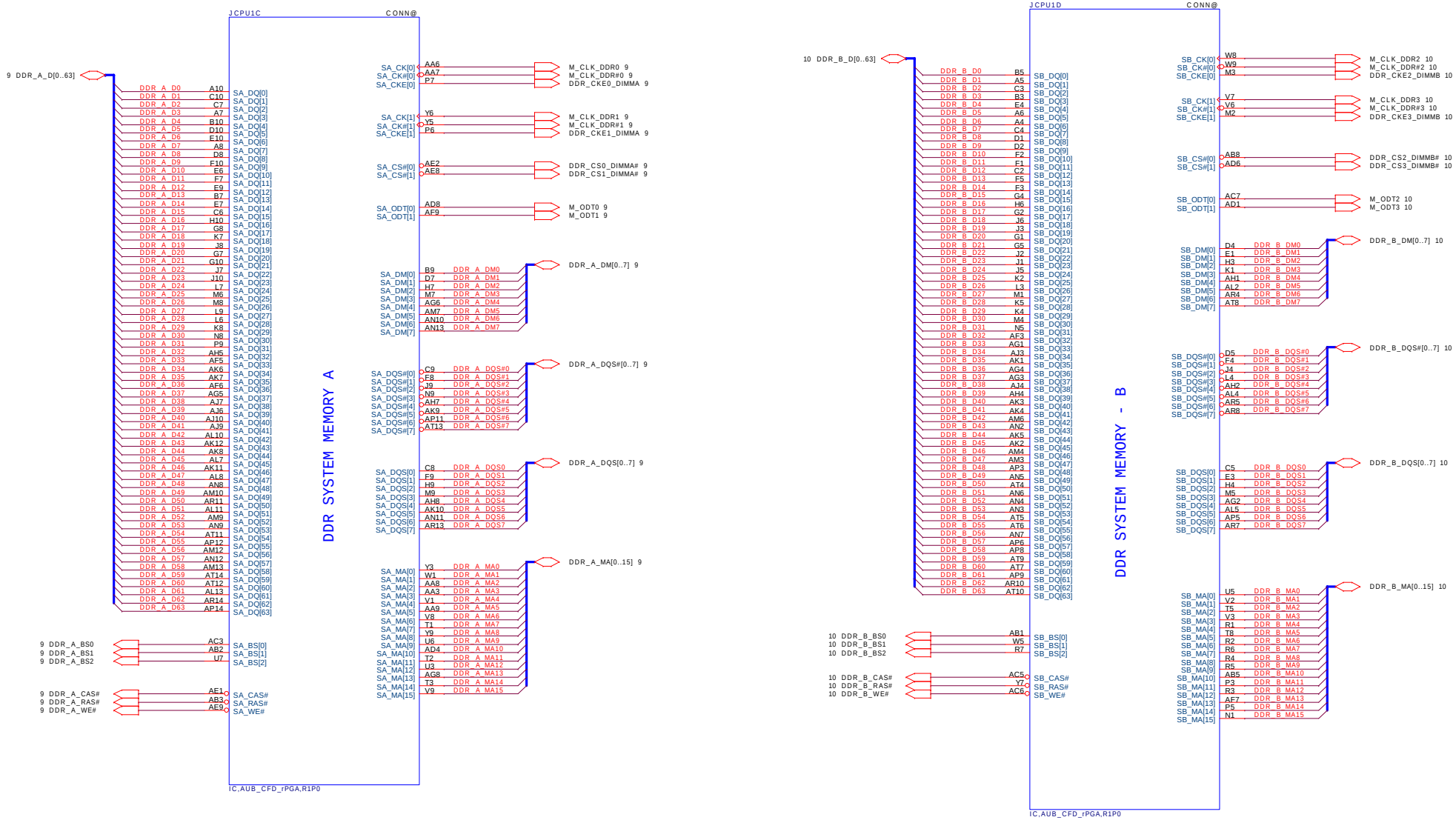

Security Classification	Compal Secret Data		
Issued Date	2008/09/15	Deciphered Date	2009/12/31

THIS SHEET OF ENGINEERING DRAWING IS THE PROPRIETARY PROPERTY OF COMPAL ELECTRONICS, INC. AND CONTAINS CONFIDENTIAL AND TRADE SECRET INFORMATION. THIS SHEET MAY NOT BE TRANSFERED FROM THE CUSTODY OF THE COMPETENT DIVISION OF R&D DEPARTMENT EXCEPT AS AUTHORIZED BY COMPAL ELECTRONICS, INC. NEITHER THIS SHEET NOR THE INFORMATION IT CONTAINS MAY BE USED BY OR DISCLOSED TO ANY THIRD PARTY WITHOUT PRIOR WRITTEN CONSENT OF COMPAL ELECTRONICS, INC.

Compal Electronics, Inc.

Title: **ARD/CFD(3/5)-DDR3**

Size	Document Number	Rev
Custom	LA-4901P	1.0

Date: Tuesday, December 15, 2009 | Sheet 6 of 54

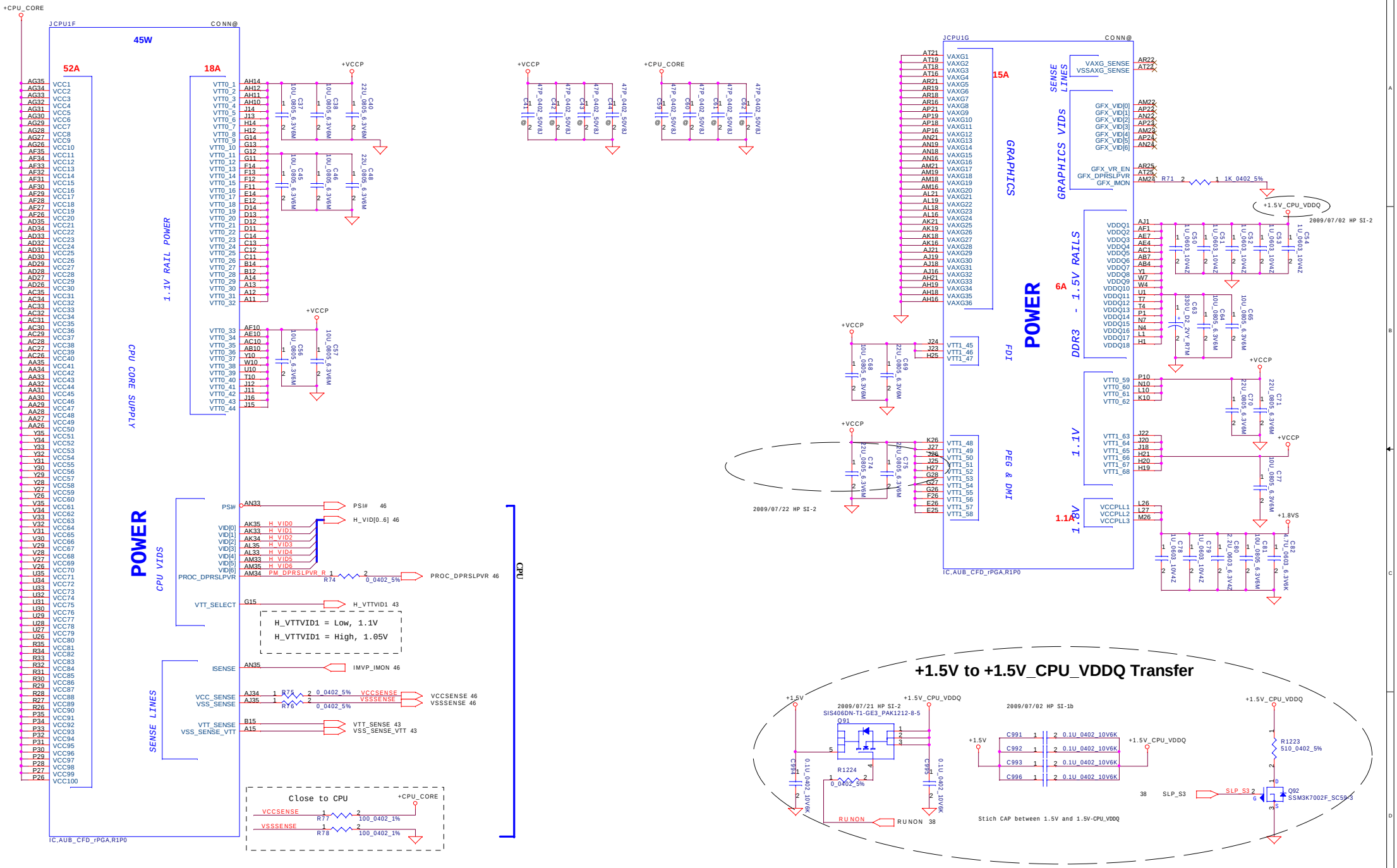

Security Classification	Compal Secret Data		
Issued Date	2008/09/15	Deciphered Date	2009/12/31

THIS SHEET OF ENGINEERING DRAWING IS THE PROPRIETARY PROPERTY OF COMPAL ELECTRONICS, INC. AND CONTAINS CONFIDENTIAL AND TRADE SECRET INFORMATION. THIS SHEET MAY NOT BE TRANSFERED FROM THE CUSTODY OF THE COMPETENT DIVISION OF R&D DEPARTMENT EXCEPT AS AUTHORIZED BY COMPAL ELECTRONICS, INC. NEITHER THIS SHEET NOR THE INFORMATION IT CONTAINS MAY BE USED BY OR DISCLOSED TO ANY THIRD PARTY WITHOUT PRIOR WRITTEN CONSENT OF COMPAL ELECTRONICS, INC.

Compal Electronics, Inc.

Title: ARD/CFD(4/5)-PWR

Size: Custom | Document Number: LA-4901P | Rev: 1.0

Date: Tuesday, December 15, 2009 | Sheet 7 of 54

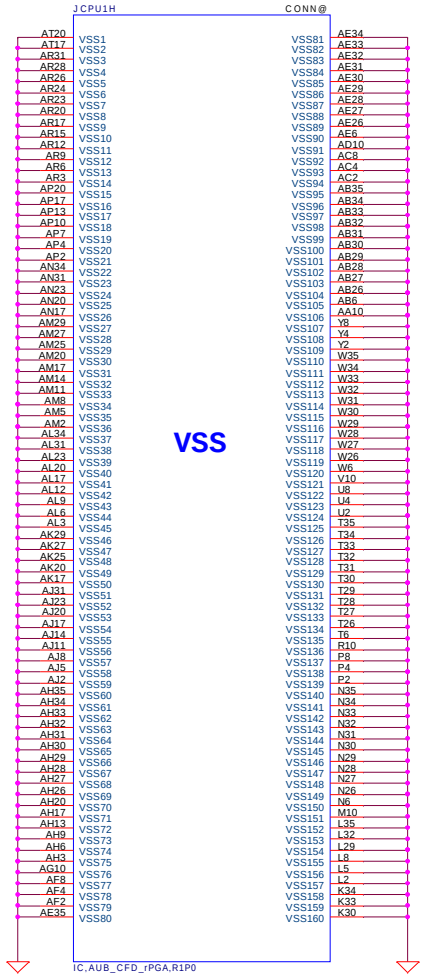

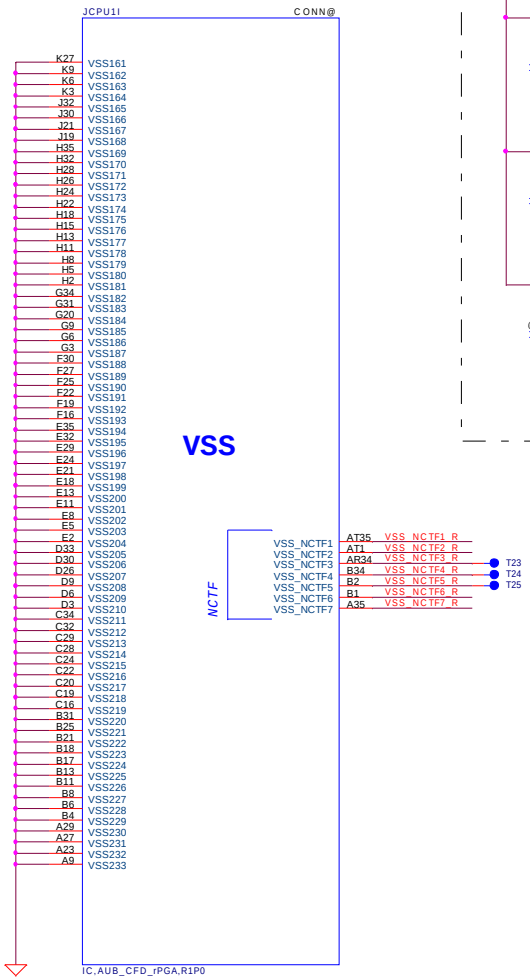

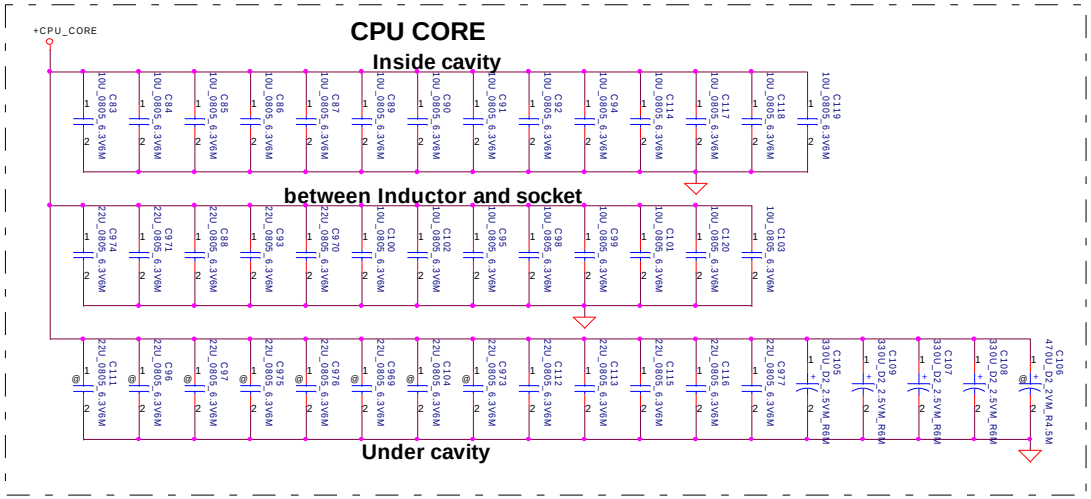

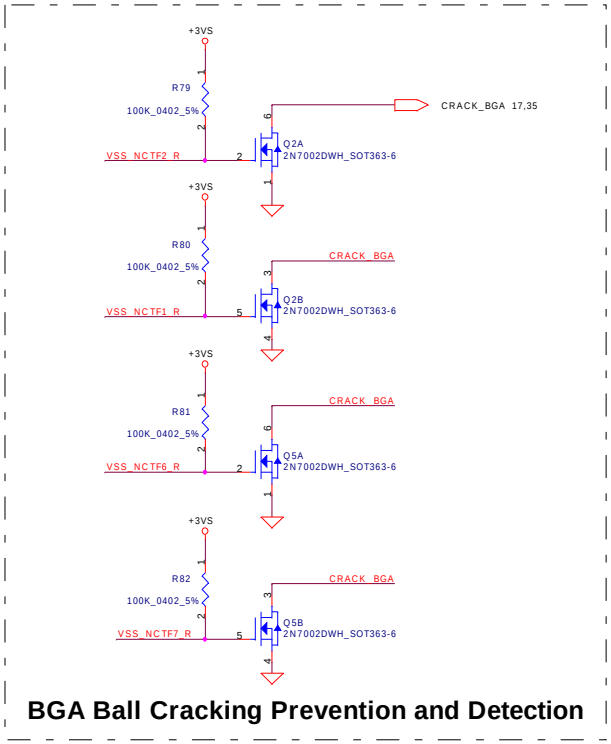

Security Classification	Compal Secret Data		
Issued Date	2008/09/15	Deciphered Date	2009/12/31

THIS SHEET OF ENGINEERING DRAWING IS THE PROPRIETARY PROPERTY OF COMPAL ELECTRONICS, INC. AND CONTAINS CONFIDENTIAL AND TRADE SECRET INFORMATION. THIS SHEET MAY NOT BE TRANSFERED FROM THE CUSTODY OF THE COMPETENT DIVISION OF R&D DEPARTMENT EXCEPT AS AUTHORIZED BY COMPAL ELECTRONICS, INC. NEITHER THIS SHEET NOR THE INFORMATION IT CONTAINS MAY BE USED BY OR DISCLOSED TO ANY THIRD PARTY WITHOUT PRIOR WRITTEN CONSENT OF COMPAL ELECTRONICS, INC.

Compal Electronics, Inc.

Title: ARD/CFD(5/5)-GND/Bypass

Size: Custom | Document Number: LA-4901P | Rev: 1.0

Date: Tuesday, December 15, 2009 | Sheet 8 of 54

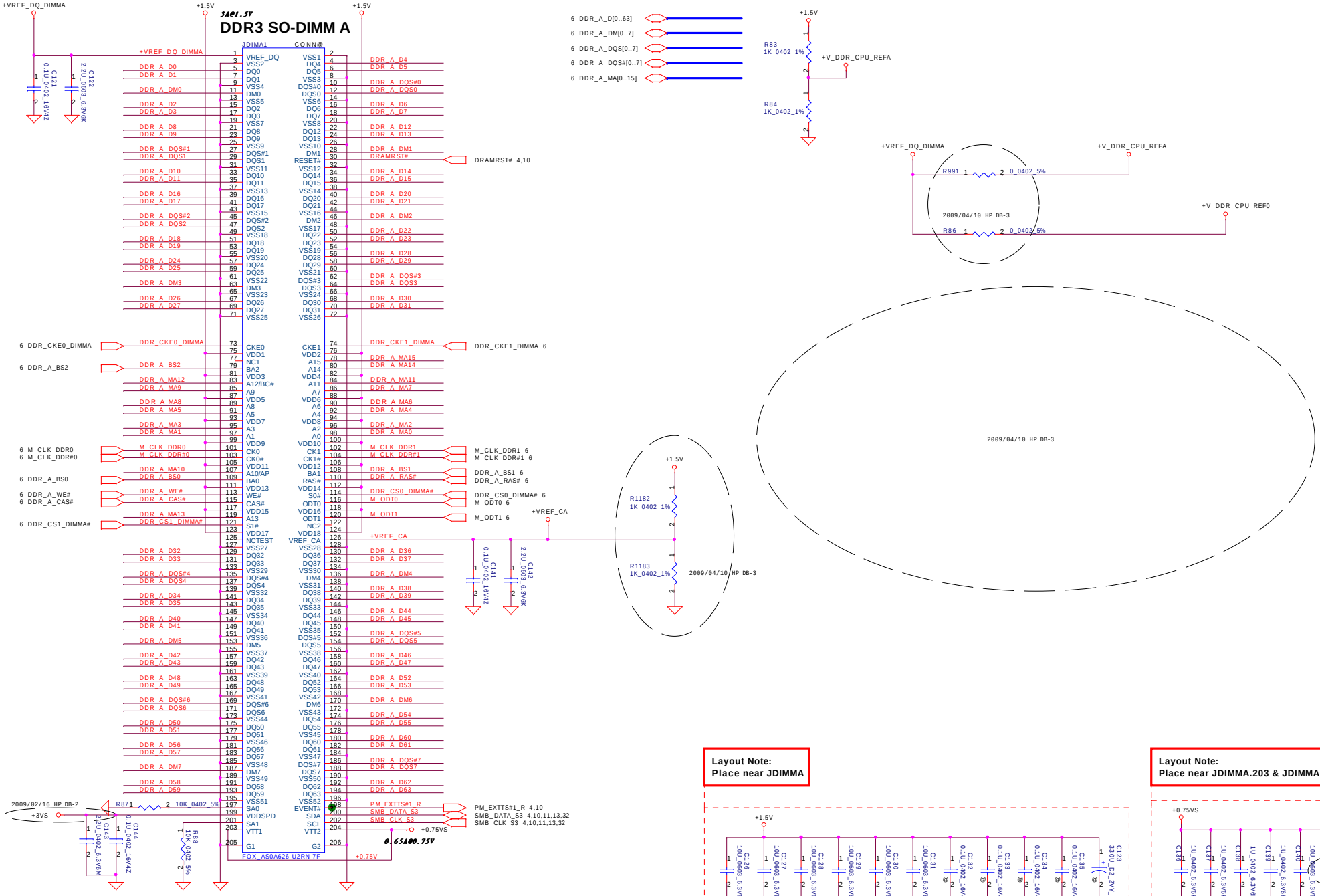

Security Classification	Compal Secret Data		
Issued Date	2008/09/15	Deciphered Date	2009/12/31

THIS SHEET OF ENGINEERING DRAWING IS THE PROPRIETARY PROPERTY OF COMPAL ELECTRONICS, INC. AND CONTAINS CONFIDENTIAL AND TRADE SECRET INFORMATION. THIS SHEET MAY NOT BE TRANSFERED FROM THE CUSTODY OF THE COMPETENT DIVISION OF R&D DEPARTMENT EXCEPT AS AUTHORIZED BY COMPAL ELECTRONICS, INC. NEITHER THIS SHEET NOR THE INFORMATION IT CONTAINS MAY BE USED BY OR DISCLOSED TO ANY THIRD PARTY WITHOUT PRIOR WRITTEN CONSENT OF COMPAL ELECTRONICS, INC.

Compal Electronics, Inc.

Title: **DDRIII-SODIMM SLOT1**

Size	Document Number	Rev
Custom	LA-4901P	1.0

Date: Tuesday, December 15, 2009 | Sheet 9 of 54

DDR3 SO-DIMM B REVERSE

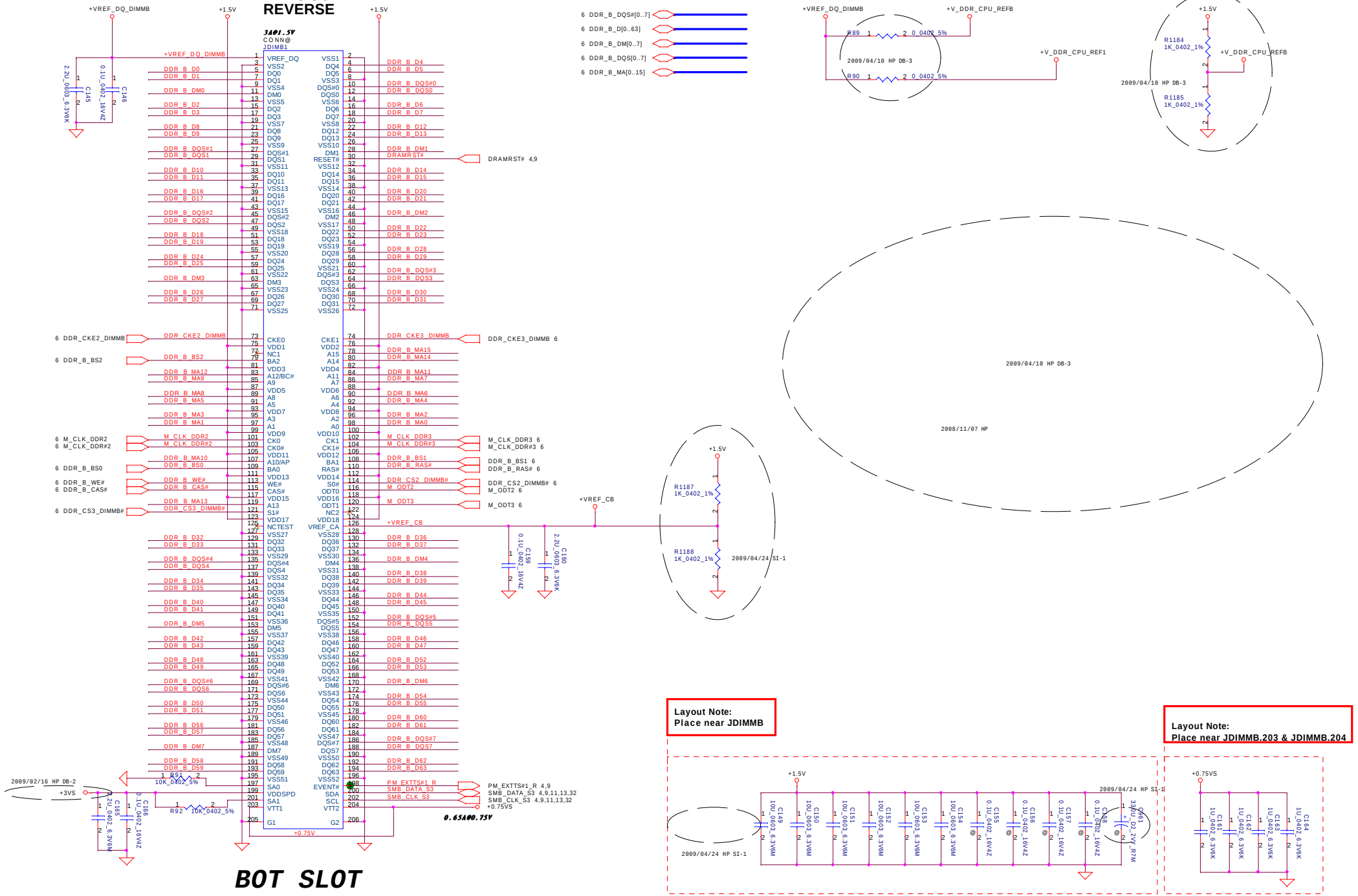

Security Classification	Compal Secret Data		
Issued Date	2008/09/15	Deciphered Date	2009/12/31

THIS SHEET OF ENGINEERING DRAWING IS THE PROPRIETARY PROPERTY OF COMPAL ELECTRONICS, INC. AND CONTAINS CONFIDENTIAL AND TRADE SECRET INFORMATION. THIS SHEET MAY NOT BE TRANSFERED FROM THE CUSTODY OF THE COMPETENT DIVISION OF R&D DEPARTMENT EXCEPT AS AUTHORIZED BY COMPAL ELECTRONICS, INC. NEITHER THIS SHEET NOR THE INFORMATION IT CONTAINS MAY BE USED BY OR DISCLOSED TO ANY THIRD PARTY WITHOUT PRIOR WRITTEN CONSENT OF COMPAL ELECTRONICS, INC.

Compal Electronics, Inc.

Title: **DDRIII-SODIMM SLOT2**

Size	Document Number	Rev
	LA-4901P	1.0

Date: Tuesday, December 15, 2009 | Sheet 10 of 54

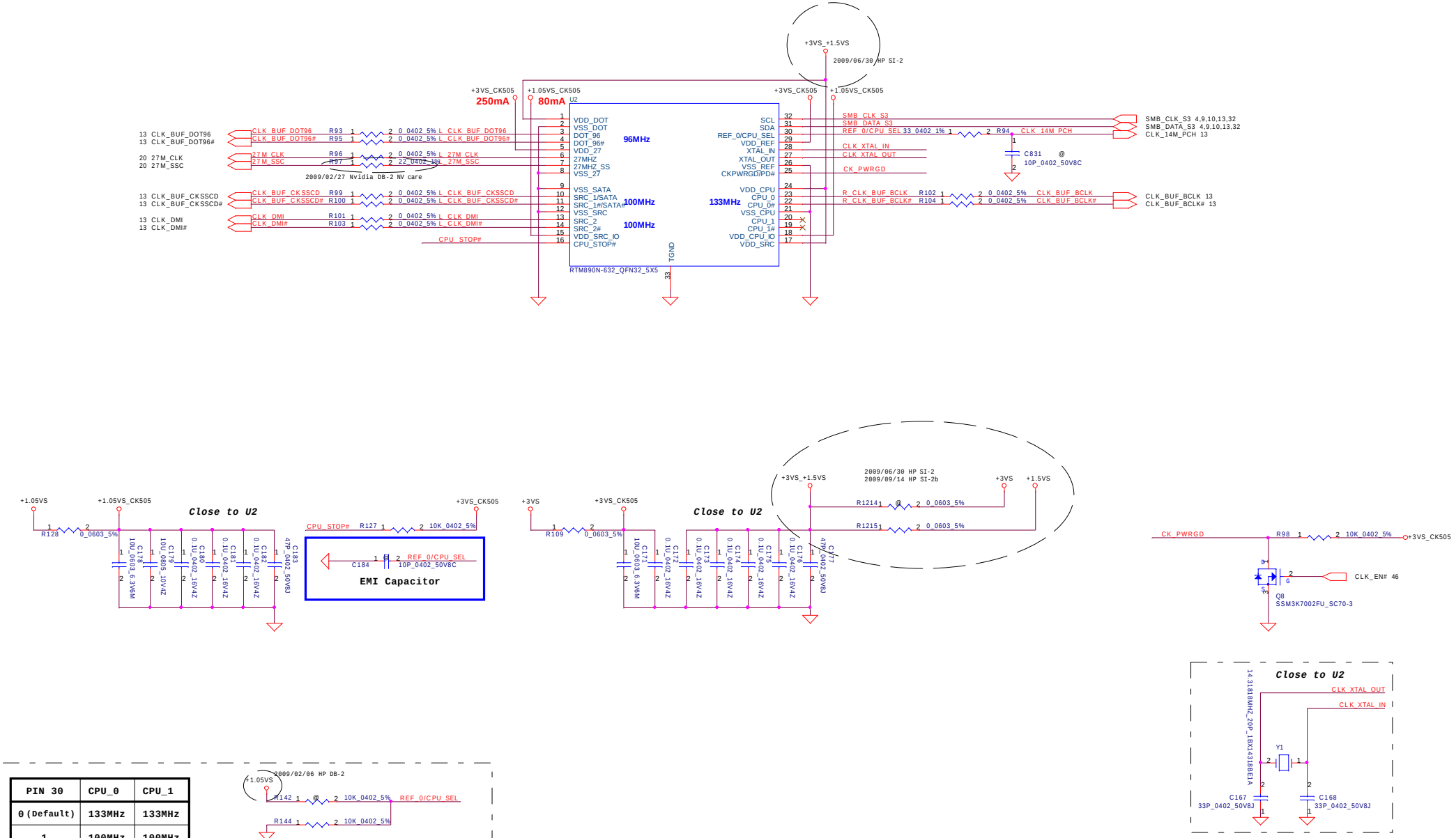

PIN 30	CPU_0	CPU_1
0 (Default)	133MHz	133MHz
1	100MHz	100MHz

Security Classification	Compal Secret Data		
Issued Date	2008/09/15	Deciphered Date	2009/12/31

THIS SHEET OF ENGINEERING DRAWING IS THE PROPRIETARY PROPERTY OF COMPAL ELECTRONICS, INC. AND CONTAINS CONFIDENTIAL AND TRADE SECRET INFORMATION. THIS SHEET MAY NOT BE TRANSFERED FROM THE CUSTODY OF THE COMPETENT DIVISION OF R&D DEPARTMENT EXCEPT AS AUTHORIZED BY COMPAL ELECTRONICS, INC. NEITHER THIS SHEET NOR THE INFORMATION IT CONTAINS MAY BE USED BY OR DISCLOSED TO ANY THIRD PARTY WITHOUT PRIOR WRITTEN CONSENT OF COMPAL ELECTRONICS, INC.

Compal Electronics, Inc.

Title: **CLOCK GENERATOR**

Size | Document Number: LA-4901P | Rev: 1.0

Date: Tuesday, December 15, 2009 | Sheet 11 of 54

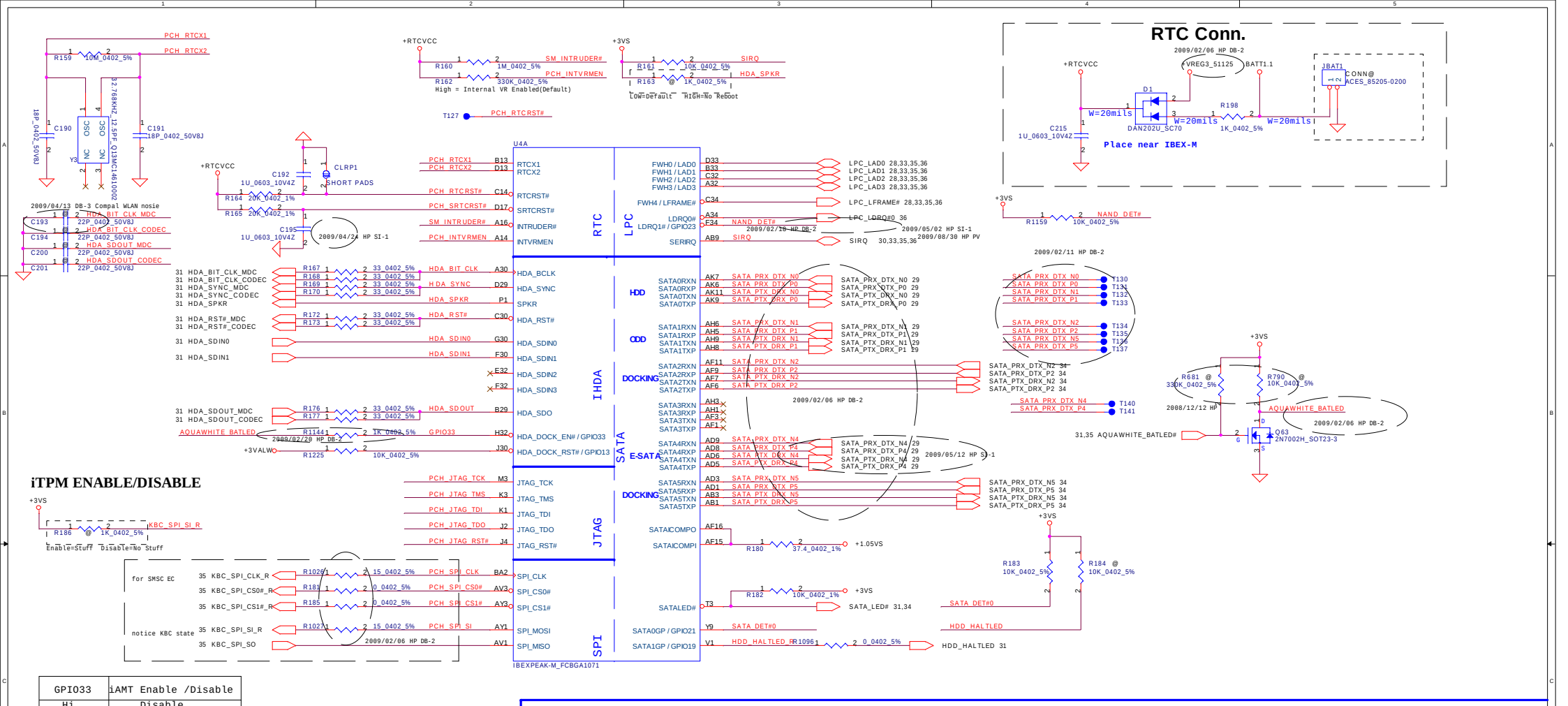

GPIO33	iAMT Enable /Disable
Hi	Disable
Lo	Enable Default

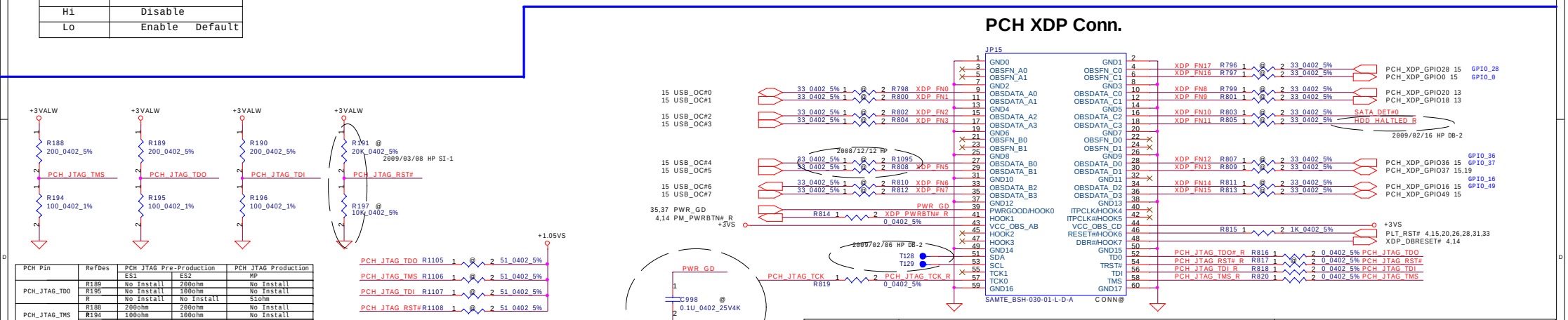

PCH Pin	RefDes	PCH JTAG Pre-Production		PCH JTAG Production
		ES1	ES2	MP
PCH_JTAG_TDO	R189	No Install	200ohm	No Install
	R195	No Install	100ohm	No Install
	R	No Install	No Install	51ohm
PCH_JTAG_TMS	R188	200ohm	200ohm	No Install
	R194	100ohm	100ohm	No Install
	R	No Install	No Install	51ohm
PCH_JTAG_TDI	R190	200ohm	200ohm	No Install
	R196	100ohm	100ohm	No Install
	R	No Install	No Install	51ohm
PCH_JTAG_TCK	R199	51ohm	51ohm	51ohm
PCH_JTAG_RST#	R191	20Kohm	20Kohm	No Install
	R197	10Kohm	10Kohm	No Install
	R	No Install	No Install	51ohm

Security Classification	Compal Secret Data		
Issued Date	2008/09/15	Deciphered Date	2009/12/31

THIS SHEET OF ENGINEERING DRAWING IS THE PROPRIETARY PROPERTY OF COMPAL ELECTRONICS, INC. AND CONTAINS CONFIDENTIAL AND TRADE SECRET INFORMATION. THIS SHEET MAY NOT BE TRANSFERED FROM THE CUSTODY OF THE COMPETENT DIVISION OF R&D DEPARTMENT EXCEPT AS AUTHORIZED BY COMPAL ELECTRONICS, INC. NEITHER THIS SHEET NOR THE INFORMATION IT CONTAINS MAY BE USED BY OR DISCLOSED TO ANY THIRD PARTY WITHOUT PRIOR WRITTEN CONSENT OF COMPAL ELECTRONICS, INC.

Compal Electronics, Inc.

Title: **IBEX-M(1/6)-HDA/JTAG/SATA**

Size: Custom | Document Number: LA-4901P | Rev: 1.0

Date: Tuesday, December 15, 2009 | Sheet 12 of 54

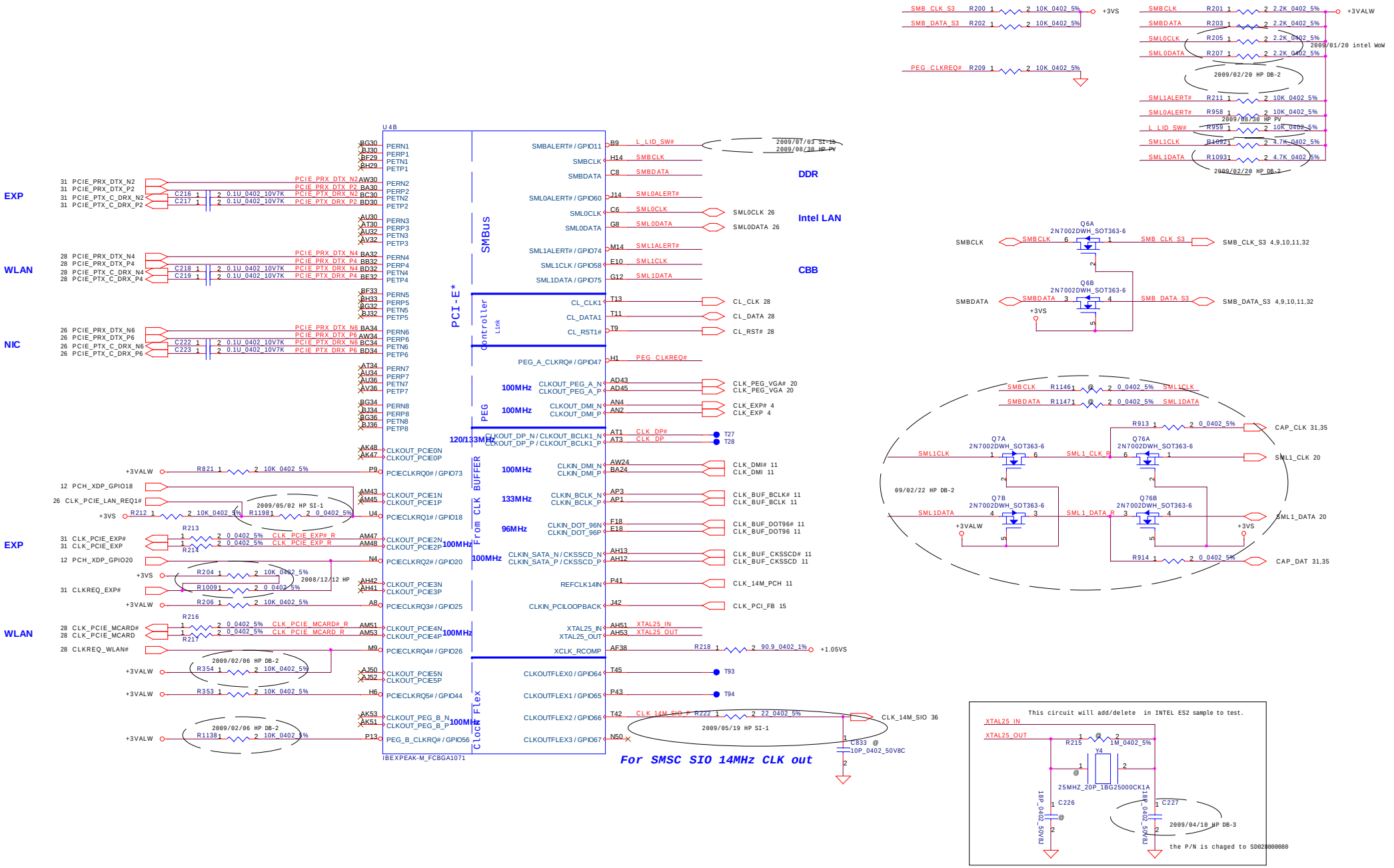

Security Classification	Compal Secret Data		
Issued Date	2008/09/15	Deciphered Date	2009/12/31

THIS SHEET OF ENGINEERING DRAWING IS THE PROPRIETARY PROPERTY OF COMPAL ELECTRONICS, INC. AND CONTAINS CONFIDENTIAL AND TRADE SECRET INFORMATION. THIS SHEET MAY NOT BE TRANSFERED FROM THE CUSTODY OF THE COMPETENT DIVISION OF R&D DEPARTMENT EXCEPT AS AUTHORIZED BY COMPAL ELECTRONICS, INC. NEITHER THIS SHEET NOR THE INFORMATION IT CONTAINS MAY BE USED BY OR DISCLOSED TO ANY THIRD PARTY WITHOUT PRIOR WRITTEN CONSENT OF COMPAL ELECTRONICS, INC.

Compal Electronics, Inc.

Title: **IBEX-M(2/6)-PCI-E/SMBUS/CLK**

Size	Document Number	Rev
Custom	LA-4901P	1.0

Date: Tuesday, December 15, 2009 | Sheet 13 of 54

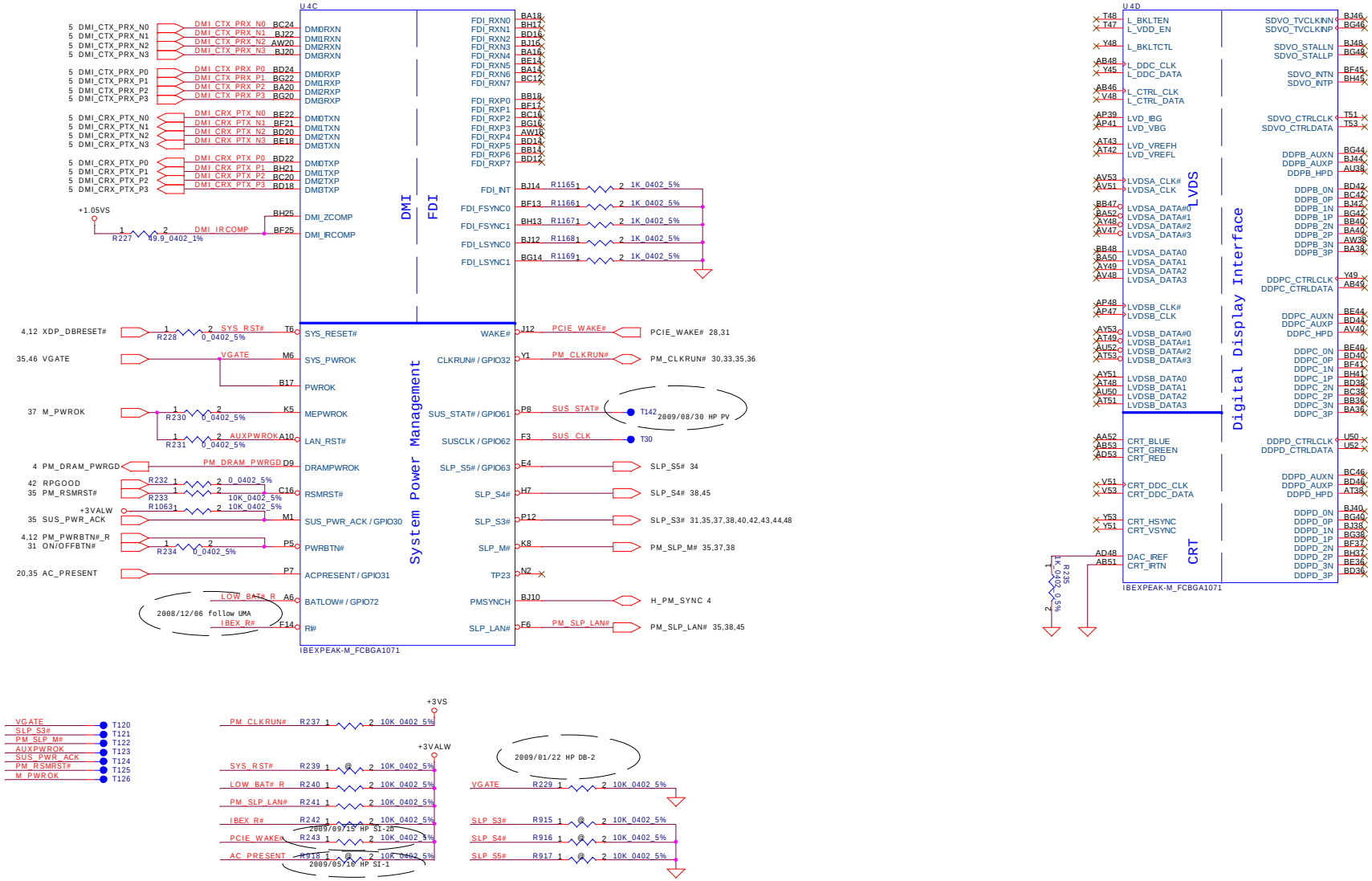

Security Classification	Compal Secret Data		
Issued Date	2008/09/15	Deciphered Date	2009/12/31

THIS SHEET OF ENGINEERING DRAWING IS THE PROPRIETARY PROPERTY OF COMPAL ELECTRONICS, INC. AND CONTAINS CONFIDENTIAL AND TRADE SECRET INFORMATION. THIS SHEET MAY NOT BE TRANSFERED FROM THE CUSTODY OF THE COMPETENT DIVISION OF R&D DEPARTMENT EXCEPT AS AUTHORIZED BY COMPAL ELECTRONICS, INC. NEITHER THIS SHEET NOR THE INFORMATION IT CONTAINS MAY BE USED BY OR DISCLOSED TO ANY THIRD PARTY WITHOUT PRIOR WRITTEN CONSENT OF COMPAL ELECTRONICS, INC.

Compal Electronics, Inc.

Title: **IBEX-M(3/6)-DMI/GPIO/LVDS**

Size: Custom | Document Number: LA-4901P | Rev: 1.0

Date: Tuesday, December 15, 2009 | Sheet 14 of 54

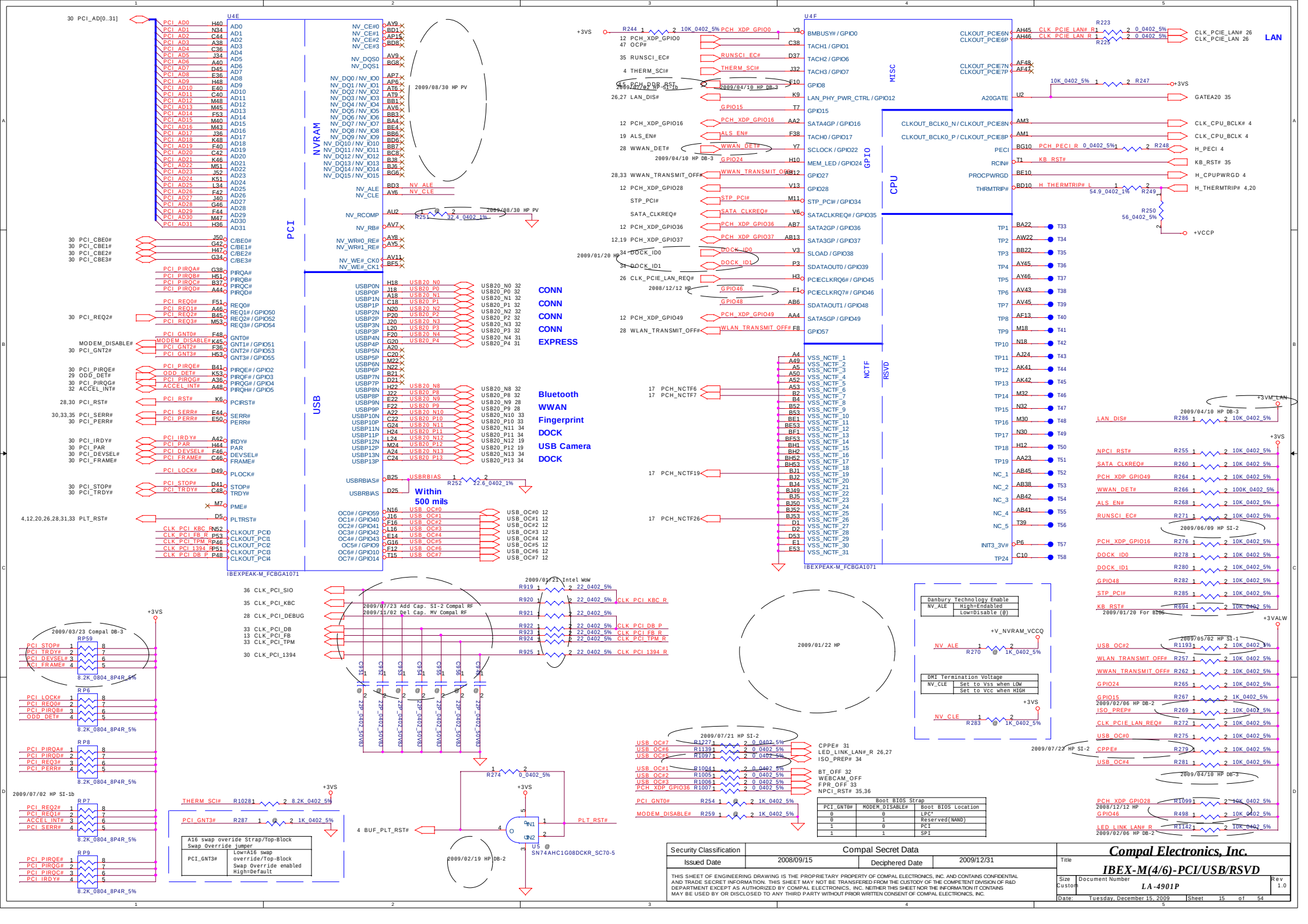
U4E
PCI
NVRAM
USB
IBEXPEAK-M_FCBGA1071
U4F
MISC
GPIO
CPU
NCTF
RSVD
LAN
CONN
CONN
CONN
CONN
EXPRESS
Bluetooth
WWAN
Fingerprint
DOCK
USB Camera
DOCK
Within 500 mils
2009/08/30 HP PV
2009/01/22 HP
2009/01/21 Intel WoW
2009/07/23 Add Cap. SI-2 Compal RF
2009/11/02 Del Cap. MV Compal RF
2009/03/23 Compal DB-3
2009/07/02 HP SI-1b
2009/07/21 HP SI-2
2009/04/10 HP DB-3
2009/02/19 HP DB-2
2009/05/02 HP SI-1
2009/06/09 HP SI-2
2009/06/09 HP DB-2
2009/01/20 For BT05
2008/12/12 HP
Danbury Technology Enable
NV_ALE High=Endabled Low=Disable (@)
DMI Termination Voltage
NV_CLE Set to Vss when LOW Set to Vcc when HIGH
A16 swap overide Strap/Top-Block Swap Override jumper
PCI_GNT3# Low=A16 swap override/Top-Block Swap Override enabled High=Default
Boot BIOS Strap
PCI_GNT0# MODEM_DISABLE# Boot BIOS Location
0 0 LPC*
0 1 Reserved(NAND)
1 0 PCI
1 1 SPI
Security Classification Compal Secret Data
Issued Date 2008/09/15 Deciphered Date 2009/12/31
THIS SHEET OF ENGINEERING DRAWING IS THE PROPRIETARY PROPERTY OF COMPAL ELECTRONICS, INC. AND CONTAINS CONFIDENTIAL AND TRADE SECRET INFORMATION. THIS SHEET MAY NOT BE TRANSFERED FROM THE CUSTODY OF THE COMPETENT DIVISION OF R&D DEPARTMENT EXCEPT AS AUTHORIZED BY COMPAL ELECTRONICS, INC. NEITHER THIS SHEET NOR THE INFORMATION IT CONTAINS MAY BE USED BY OR DISCLOSED TO ANY THIRD PARTY WITHOUT PRIOR WRITTEN CONSENT OF COMPAL ELECTRONICS, INC.
Compal Electronics, Inc.
Title IBEX-M(4/6)-PCI/USB/RSVD
Size Custom Document Number LA-4901P Rev 1.0
Date: Tuesday, December 15, 2009 Sheet 15 of 54

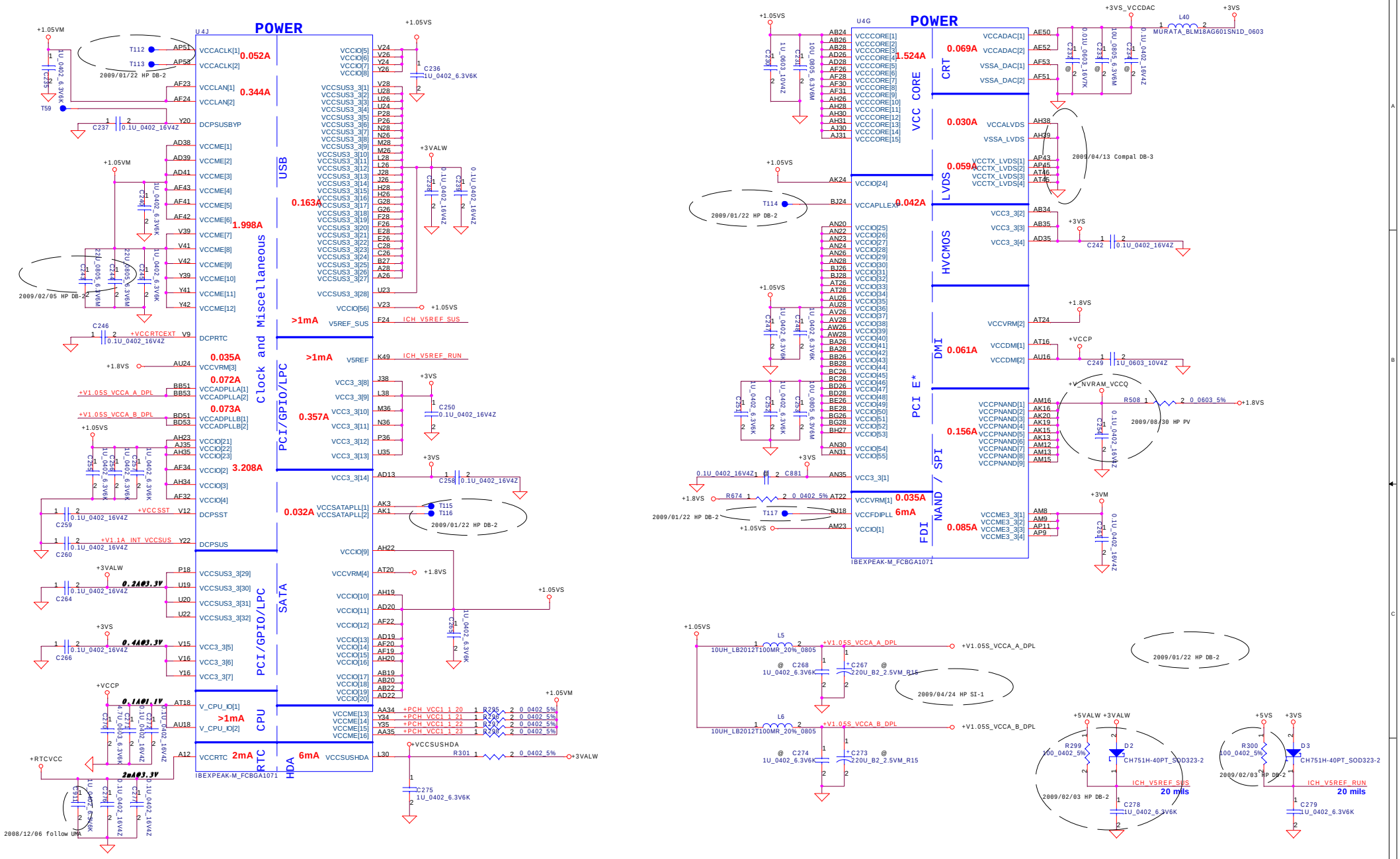

Security Classification	Compal Secret Data		
Issued Date	2008/09/15	Deciphered Date	2009/12/31

THIS SHEET OF ENGINEERING DRAWING IS THE PROPRIETARY PROPERTY OF COMPAL ELECTRONICS, INC. AND CONTAINS CONFIDENTIAL AND TRADE SECRET INFORMATION. THIS SHEET MAY NOT BE TRANSFERRED FROM THE CUSTODY OF THE COMPETENT DIVISION OF R&D DEPARTMENT EXCEPT AS AUTHORIZED BY COMPAL ELECTRONICS, INC. NEITHER THIS SHEET NOR THE INFORMATION IT CONTAINS MAY BE USED BY OR DISCLOSED TO ANY THIRD PARTY WITHOUT PRIOR WRITTEN CONSENT OF COMPAL ELECTRONICS, INC.

Compal Electronics, Inc.

Title: **IBEX-M(5/6)-PWR**

Size	Document Number	Rev
Custom	LA-4901P	1.0

Date: Tuesday, December 15, 2009 | Sheet 16 of 54

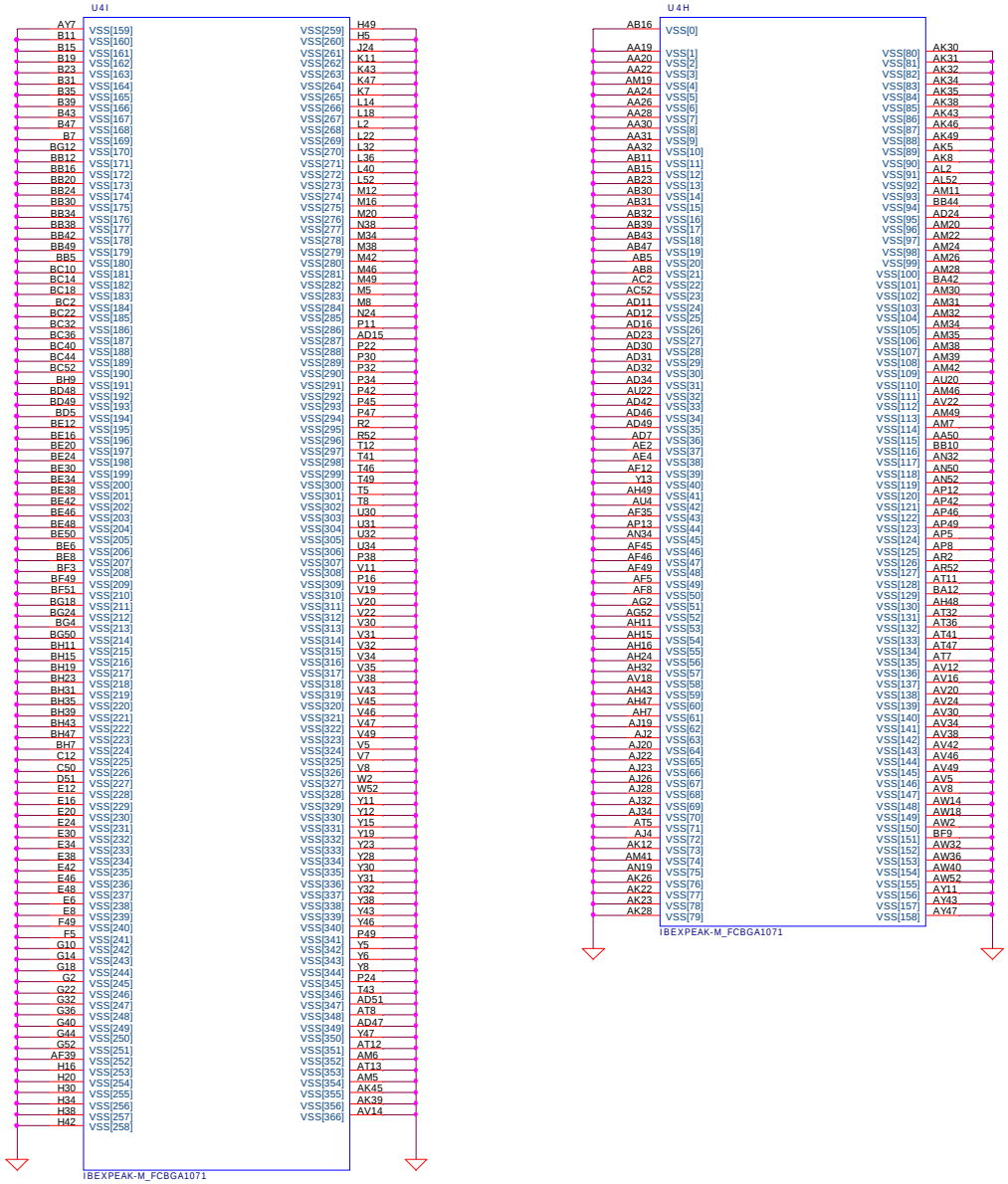

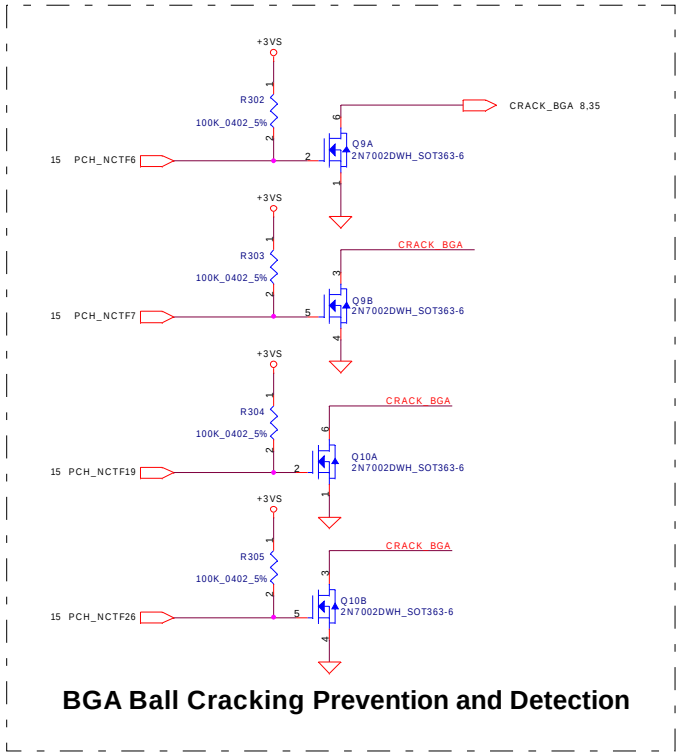

Security Classification	Compal Secret Data		
Issued Date	2008/09/15	Deciphered Date	2009/12/31

THIS SHEET OF ENGINEERING DRAWING IS THE PROPRIETARY PROPERTY OF COMPAL ELECTRONICS, INC. AND CONTAINS CONFIDENTIAL AND TRADE SECRET INFORMATION. THIS SHEET MAY NOT BE TRANSFERED FROM THE CUSTODY OF THE COMPETENT DIVISION OF R&D DEPARTMENT EXCEPT AS AUTHORIZED BY COMPAL ELECTRONICS, INC. NEITHER THIS SHEET NOR THE INFORMATION IT CONTAINS MAY BE USED BY OR DISCLOSED TO ANY THIRD PARTY WITHOUT PRIOR WRITTEN CONSENT OF COMPAL ELECTRONICS, INC.

Compal Electronics, Inc.

Title: **IBEX-M(6/6)-GND**

Size: Custom | Document Number: LA-4901P | Rev: 1.0

Date: Tuesday, December 15, 2009 | Sheet 17 of 54

CRT Connector

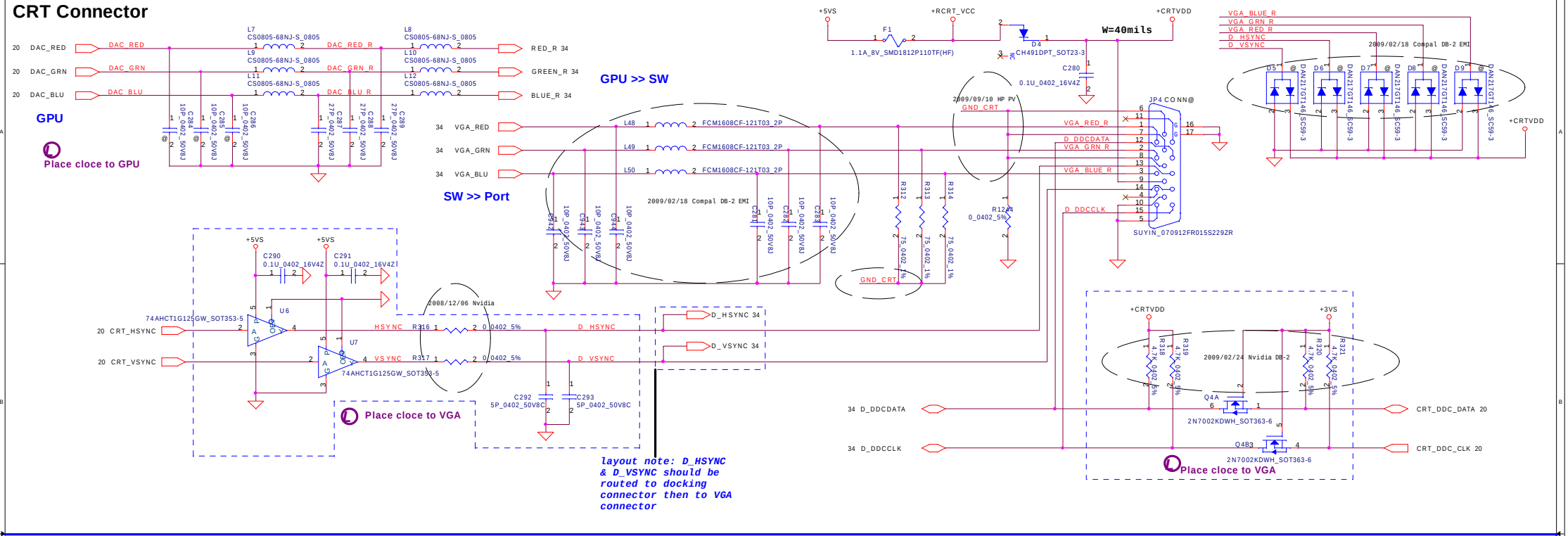

Display Port Connector

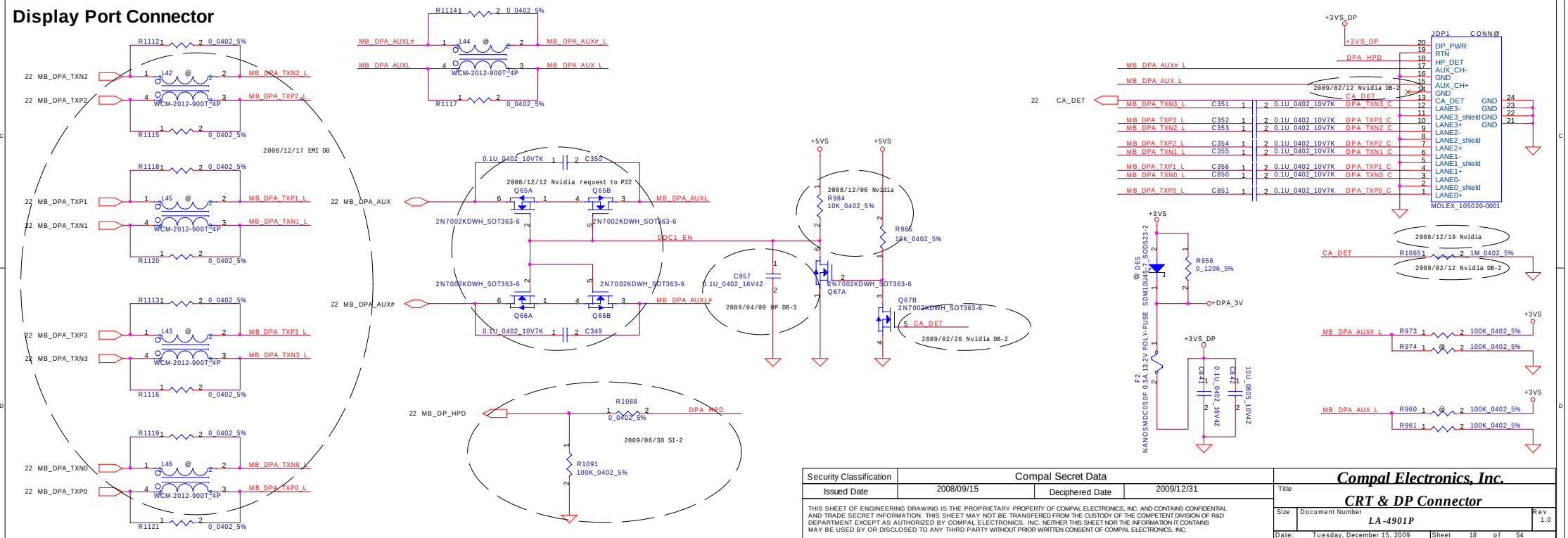

Security Classification	Compal Secret Data		
Issued Date	2008/09/15	Deciphered Date	2009/12/31

THIS SHEET OF ENGINEERING DRAWING IS THE PROPRIETARY PROPERTY OF COMPAL ELECTRONICS, INC. AND CONTAINS CONFIDENTIAL AND TRADE SECRET INFORMATION. THIS SHEET MAY NOT BE TRANSFERRED FROM THE CUSTODY OF THE COMPETENT DIVISION OF R&D DEPARTMENT EXCEPT AS AUTHORIZED BY COMPAL ELECTRONICS, INC. NEITHER THIS SHEET NOR THE INFORMATION IT CONTAINS MAY BE USED BY OR DISCLOSED TO ANY THIRD PARTY WITHOUT PRIOR WRITTEN CONSENT OF COMPAL ELECTRONICS, INC.

Compal Electronics, Inc.

Title: **CRT & DP Connector**

Size	Document Number	Rev
	LA-4901P	1.0

Date: Tuesday, December 15, 2009 | Sheet 18 of 54

LCD/PANEL BD. CONN.

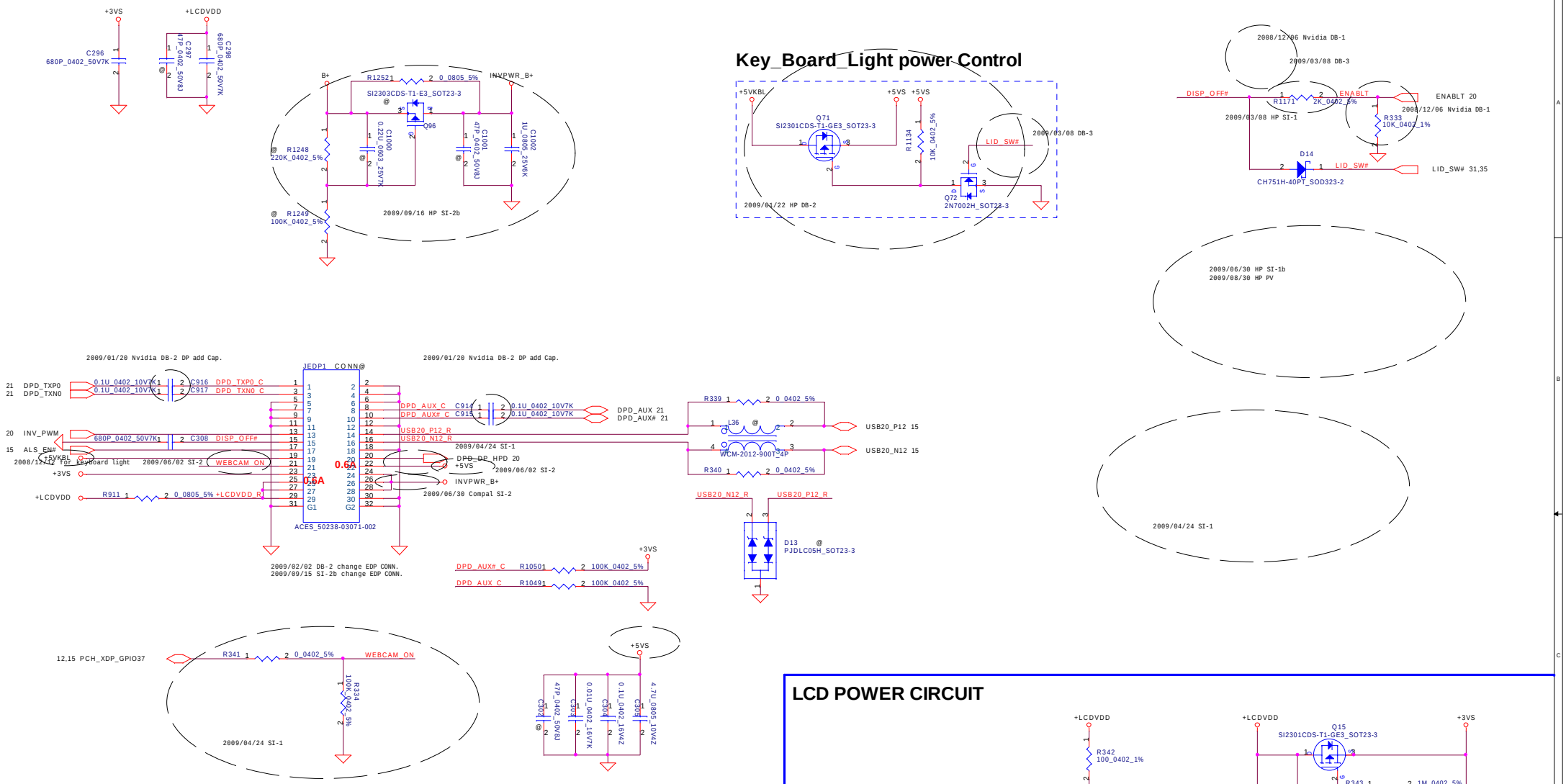

LCD POWER CIRCUIT

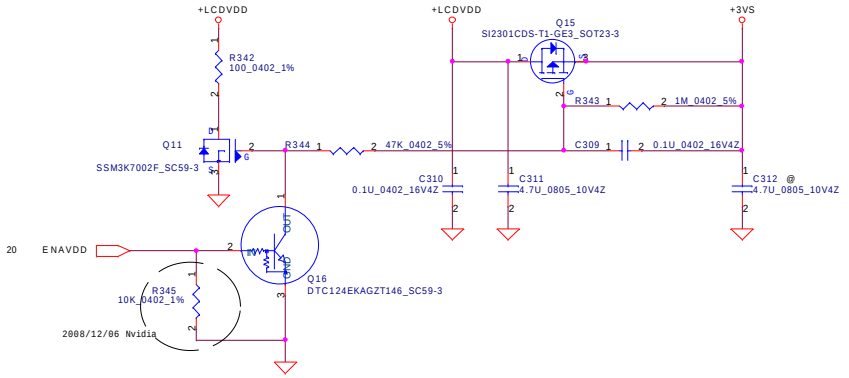

Security Classification	Compal Secret Data		
Issued Date	2008/09/15	Deciphered Date	2009/12/31

THIS SHEET OF ENGINEERING DRAWING IS THE PROPRIETARY PROPERTY OF COMPAL ELECTRONICS, INC. AND CONTAINS CONFIDENTIAL AND TRADE SECRET INFORMATION. THIS SHEET MAY NOT BE TRANSFERED FROM THE CUSTODY OF THE COMPETENT DIVISION OF R&D DEPARTMENT EXCEPT AS AUTHORIZED BY COMPAL ELECTRONICS, INC. NEITHER THIS SHEET NOR THE INFORMATION IT CONTAINS MAY BE USED BY OR DISCLOSED TO ANY THIRD PARTY WITHOUT PRIOR WRITTEN CONSENT OF COMPAL ELECTRONICS, INC.

Compal Electronics, Inc.

Title: **LCD & eDP CONN.**

Size | Document Number: **LA-4901P** | Rev: 1.0

Date: Tuesday, December 15, 2009 | Sheet 19 of 54

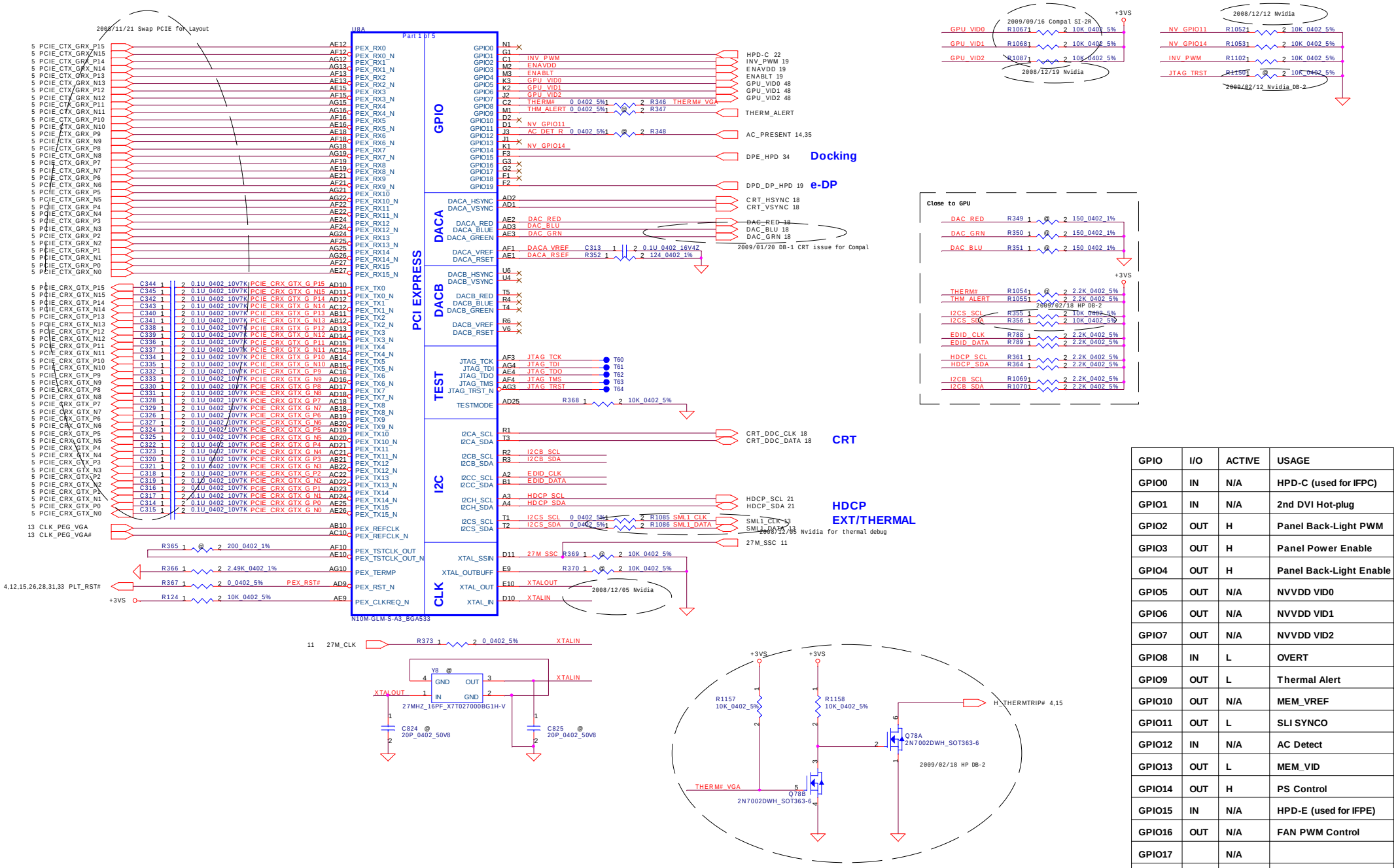

GPIO	I/O	ACTIVE	USAGE
GPIO0	IN	N/A	HPD-C (used for IFPC)
GPIO1	IN	N/A	2nd DVI Hot-plug
GPIO2	OUT	H	Panel Back-Light PWM
GPIO3	OUT	H	Panel Power Enable
GPIO4	OUT	H	Panel Back-Light Enable
GPIO5	OUT	N/A	NVVDD VID0
GPIO6	OUT	N/A	NVVDD VID1
GPIO7	OUT	N/A	NVVDD VID2
GPIO8	IN	L	OVERT
GPIO9	OUT	L	Thermal Alert
GPIO10	OUT	N/A	MEM_VREF
GPIO11	OUT	L	SLI SYNCO
GPIO12	IN	N/A	AC Detect
GPIO13	OUT	L	MEM_VID
GPIO14	OUT	H	PS Control
GPIO15	IN	N/A	HPD-E (used for IFPE)
GPIO16	OUT	N/A	FAN PWM Control
GPIO17		N/A	
GPIO18		N/A	
GPIO19	IN	N/A	HPD-D (used for IFPD)

Security Classification	Compal Secret Data		
Issued Date	2008/09/15	Deciphered Date	2009/12/31

THIS SHEET OF ENGINEERING DRAWING IS THE PROPRIETARY PROPERTY OF COMPAL ELECTRONICS, INC. AND CONTAINS CONFIDENTIAL AND TRADE SECRET INFORMATION. THIS SHEET MAY NOT BE TRANSFERED FROM THE CUSTODY OF THE COMPETENT DIVISION OF R&D DEPARTMENT EXCEPT AS AUTHORIZED BY COMPAL ELECTRONICS, INC. NEITHER THIS SHEET NOR THE INFORMATION IT CONTAINS MAY BE USED BY OR DISCLOSED TO ANY THIRD PARTY WITHOUT PRIOR WRITTEN CONSENT OF COMPAL ELECTRONICS, INC.

Compal Electronics, Inc.

Title: PEG Interface

Size: Custom | Document Number: LA-4901P | Rev: 1.0

Date: Tuesday, December 15, 2009 | Sheet 20 of 54

LVDS Interface

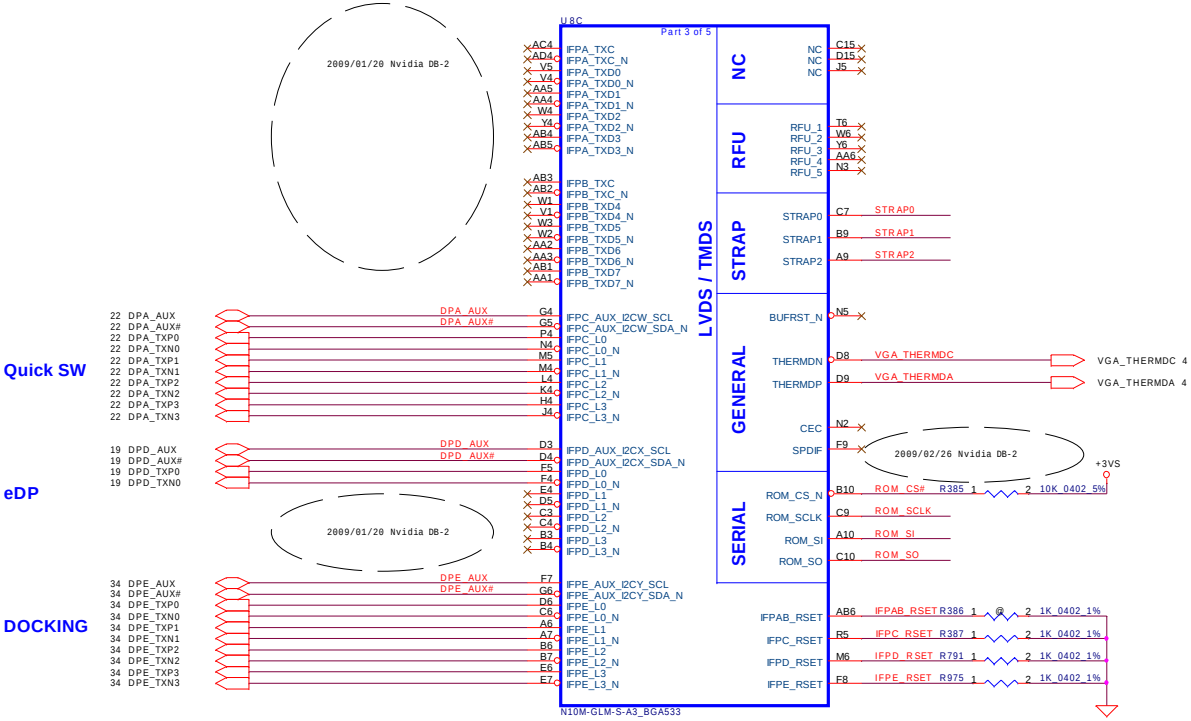

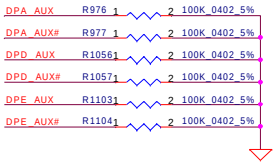

GLM:SA000030V20 : S IC N10M-GLM-S-QS(GT218-920) BGA 533P

Hynix : SD034150280 S RES 1/16W 15K +-1% 0402
Samsung: SD034200280 S RES 1/16W 20K +-1% 0402

V-BIOS ROM

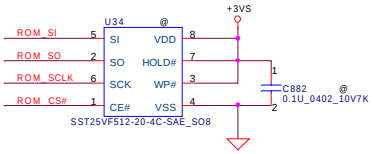

HDCP ROM

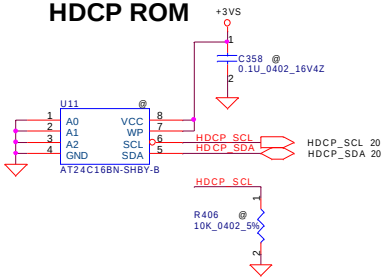

Straps

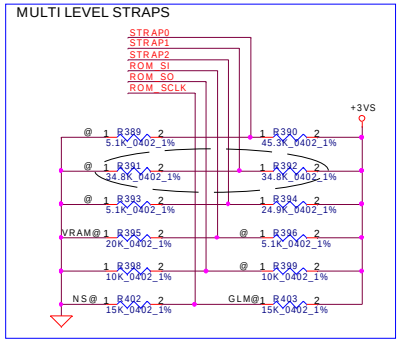

FB HW Strap for DDR3: (RAM_CFG @ROM_SI)
- Hynix 64Mx16: 0000 (R395 pull-down 15K)
- Samsung 64Mx16: 0001 (R395 pull-down 20K)

Stuff R394 --> N10M-GLM, N10M-NS
Stuff R402 --> N10M-NS
Stuff R403 --> N10M-GLM

R402/R403:
- 15K: VBIOS combined in SBIOS
- 35K: use VBIOS rom chip

Security Classification	Compal Secret Data		
Issued Date	2008/09/15	Deciphered Date	2009/12/31

THIS SHEET OF ENGINEERING DRAWING IS THE PROPRIETARY PROPERTY OF COMPAL ELECTRONICS, INC. AND CONTAINS CONFIDENTIAL AND TRADE SECRET INFORMATION. THIS SHEET MAY NOT BE TRANSFERED FROM THE CUSTODY OF THE COMPETENT DIVISION OF R&D DEPARTMENT EXCEPT AS AUTHORIZED BY COMPAL ELECTRONICS, INC. NEITHER THIS SHEET NOR THE INFORMATION IT CONTAINS MAY BE USED BY OR DISCLOSED TO ANY THIRD PARTY WITHOUT PRIOR WRITTEN CONSENT OF COMPAL ELECTRONICS, INC.

Compal Electronics, Inc.

Title: **N10M(2) LVDS&DP&HDCP**

Size: Custom | Document Number: LA-4901P | Rev: 1.0

Date: Tuesday, December 15, 2009 | Sheet 21 of 54

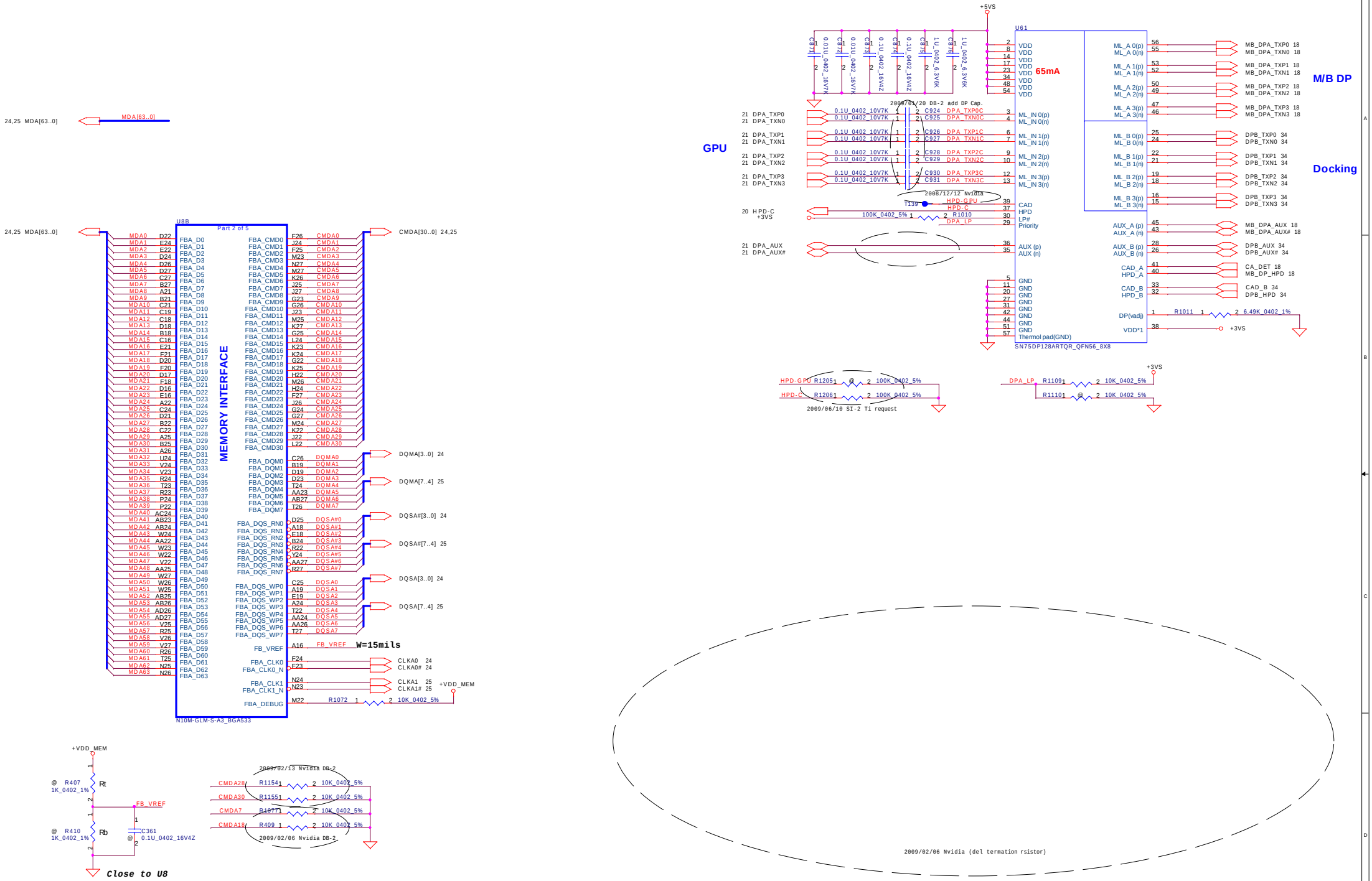

Security Classification	Compal Secret Data		
Issued Date	2008/09/15	Deciphered Date	2009/12/31

THIS SHEET OF ENGINEERING DRAWING IS THE PROPRIETARY PROPERTY OF COMPAL ELECTRONICS, INC. AND CONTAINS CONFIDENTIAL AND TRADE SECRET INFORMATION. THIS SHEET MAY NOT BE TRANSFERED FROM THE CUSTODY OF THE COMPETENT DIVISION OF R&D DEPARTMENT EXCEPT AS AUTHORIZED BY COMPAL ELECTRONICS, INC. NEITHER THIS SHEET NOR THE INFORMATION IT CONTAINS MAY BE USED BY OR DISCLOSED TO ANY THIRD PARTY WITHOUT PRIOR WRITTEN CONSENT OF COMPAL ELECTRONICS, INC.

Compal Electronics, Inc.

Title: **N10M(3)_VGA RAM Interface**

Size	Document Number	Rev
Custom	LA-4901P	1.0

Date: Tuesday, December 15, 2009 | Sheet 22 of 54

VGA Power sequence: +.3VS->+NVVDD->+VDD_MEM

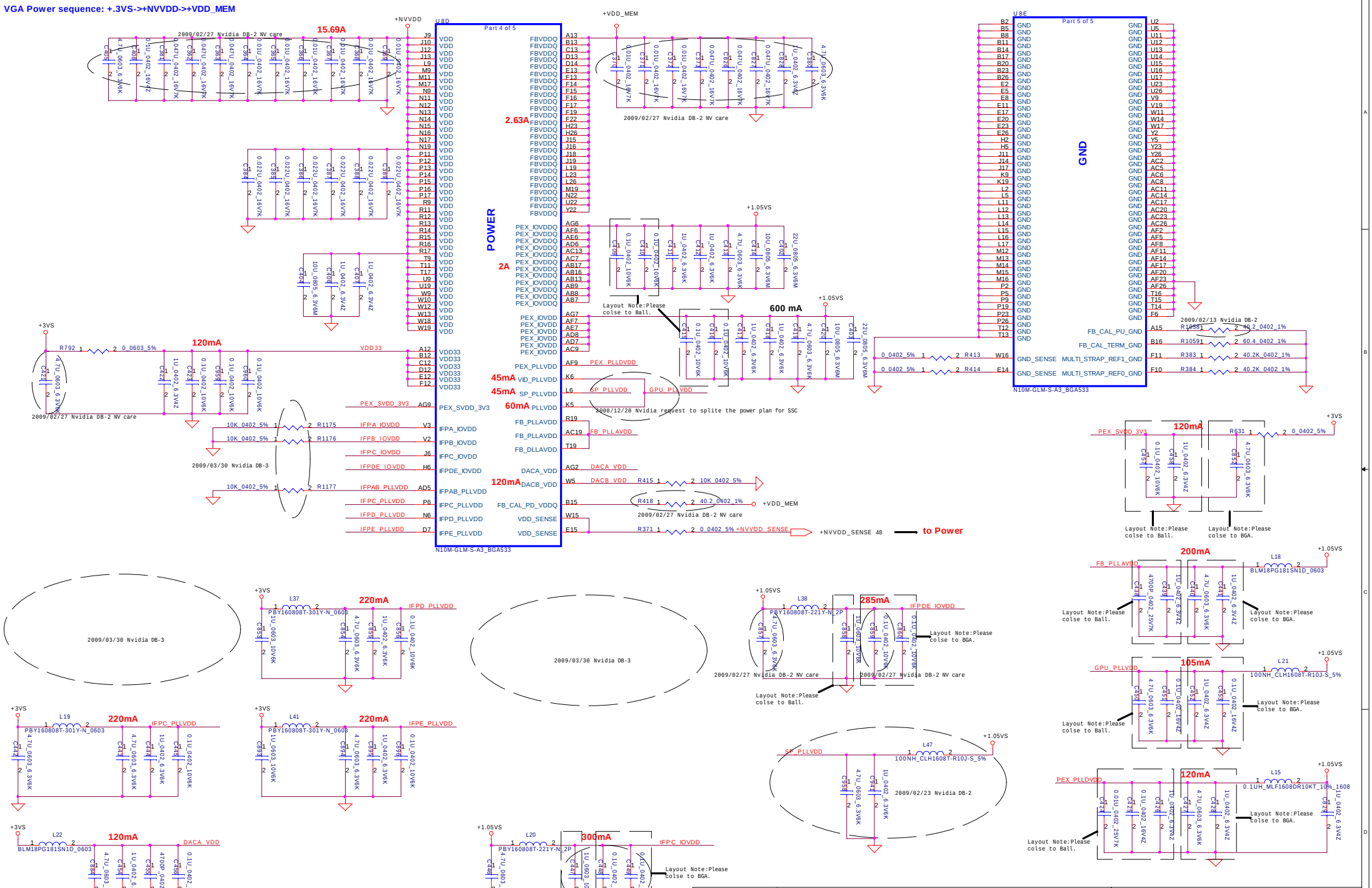

Security Classification	Compal Secret Data		
Issued Date	2008/09/15	Deciphered Date	2009/12/31

THIS SHEET OF ENGINEERING DRAWING IS THE PROPRIETARY PROPERTY OF COMPAL ELECTRONICS, INC. AND CONTAINS CONFIDENTIAL AND TRADE SECRET INFORMATION. THIS SHEET MAY NOT BE TRANSFERED FROM THE CUSTODY OF THE COMPETENT DIVISION OF R&D DEPARTMENT EXCEPT AS AUTHORIZED BY COMPAL ELECTRONICS, INC. NEITHER THIS SHEET NOR THE INFORMATION IT CONTAINS MAY BE USED BY OR DISCLOSED TO ANY THIRD PARTY WITHOUT PRIOR WRITTEN CONSENT OF COMPAL ELECTRONICS, INC.

Compal Electronics, Inc.

Title: **N10M(4)_Power/GND**

Size	Document Number	Rev
Custom	LA-4901P	1.0

Date: Tuesday, December 15, 2009 | Sheet 23 of 54

VRAM DDR3 chips (512MB)

Hynix : H5TQ1G63BFR-12C-->SA000032400
Samsung : K4W1G1646E-HC12-->SA000035700

64Mx16 DDR3 800MHz*4==>512MB

Low 32 bit FB

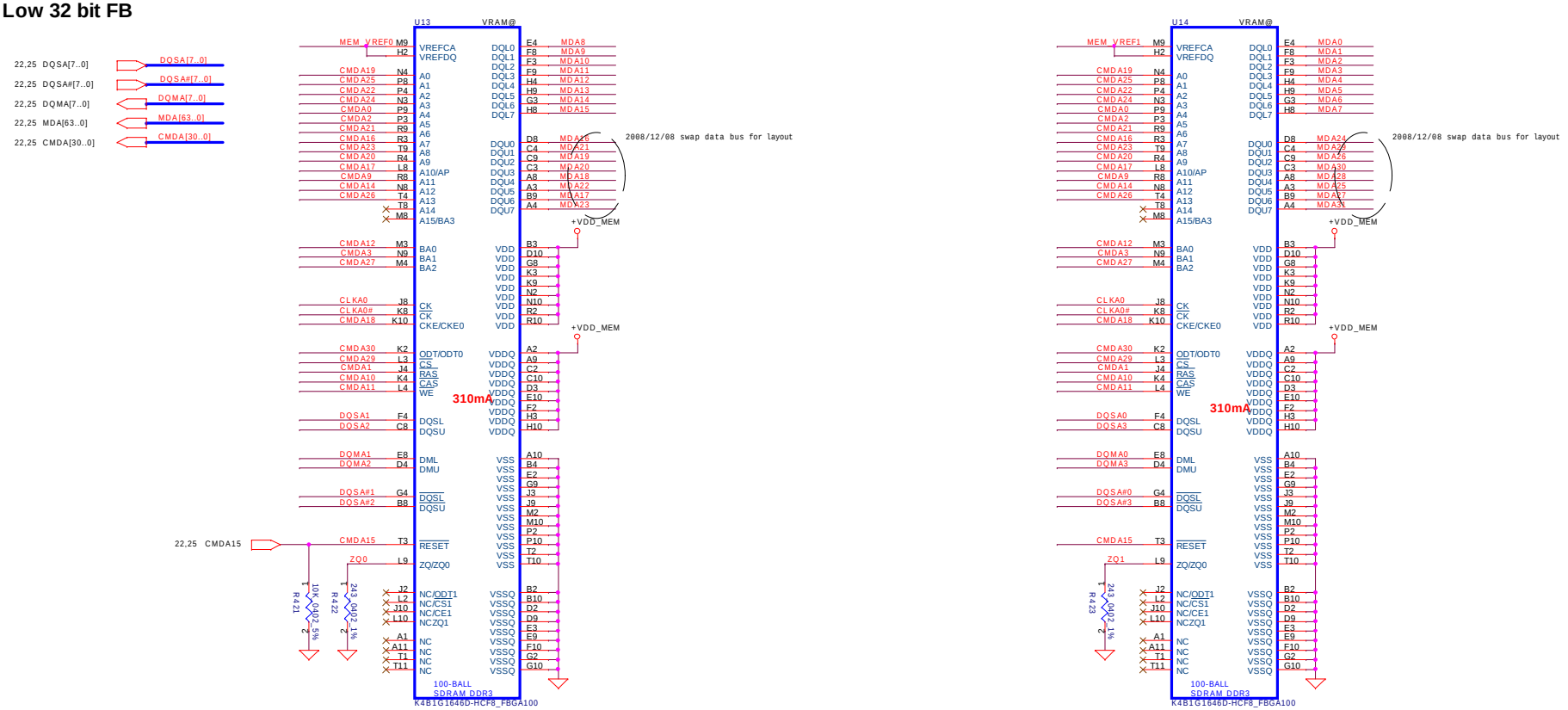

	DATA Bus	
Address	0..31	32..63
CMD0	A4	
CMD1	RAS#	RAS#
CMD2	A5	
CMD3	BA1	BA1
CMD4		A2
CMD5		A4
CMD6		A3
CMD7		CKE
CMD8		CS#
CMD9	A11	A11
CMD10	CAS#	CAS#
CMD11	WE#	WE#
CMD12	BA0	BA0
CMD13		A5
CMD14	A12	A12
CMD15	RST	RST
CMD16	A7	A7
CMD17	A10	A10
CMD18	CKE	
CMD19	A0	A0
CMD20	A9	A9
CMD21	A6	A6
CMD22	A2	
CMD23	A8	A8
CMD24	A3	
CMD25	A1	A1
CMD26	A13	A13
CMD27	BA2	BA2
CMD28		ODT
CMD29	CS#	
CMD30	ODT	
	LOW	HIGH

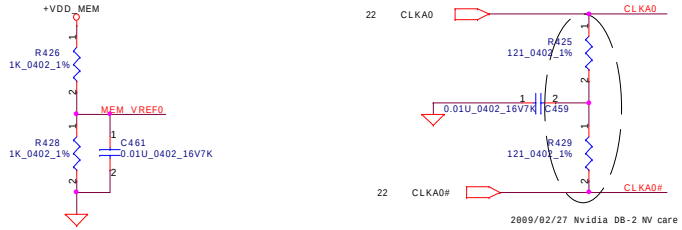

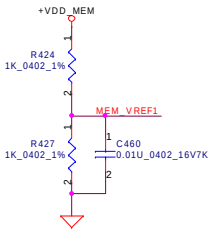

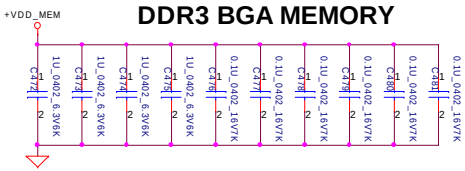

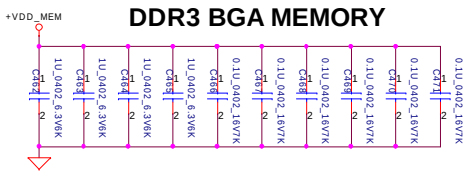

Security Classification	Compal Secret Data		
Issued Date	2008/09/15	Deciphered Date	2009/12/31

THIS SHEET OF ENGINEERING DRAWING IS THE PROPRIETARY PROPERTY OF COMPAL ELECTRONICS, INC. AND CONTAINS CONFIDENTIAL AND TRADE SECRET INFORMATION. THIS SHEET MAY NOT BE TRANSFERED FROM THE CUSTODY OF THE COMPETENT DIVISION OF R&D DEPARTMENT EXCEPT AS AUTHORIZED BY COMPAL ELECTRONICS, INC. NEITHER THIS SHEET NOR THE INFORMATION IT CONTAINS MAY BE USED BY OR DISCLOSED TO ANY THIRD PARTY WITHOUT PRIOR WRITTEN CONSENT OF COMPAL ELECTRONICS, INC.

Compal Electronics, Inc.

Title: VRAM DDR3

Size | Document Number: LA-4901P | Rev 0.1

Date: Tuesday, December 15, 2009 | Sheet 24 of 54

VRAM DDR3 chips (512MB)

64Mx16 DDR3 800MHz*4==>512MB

High 32 bit FB

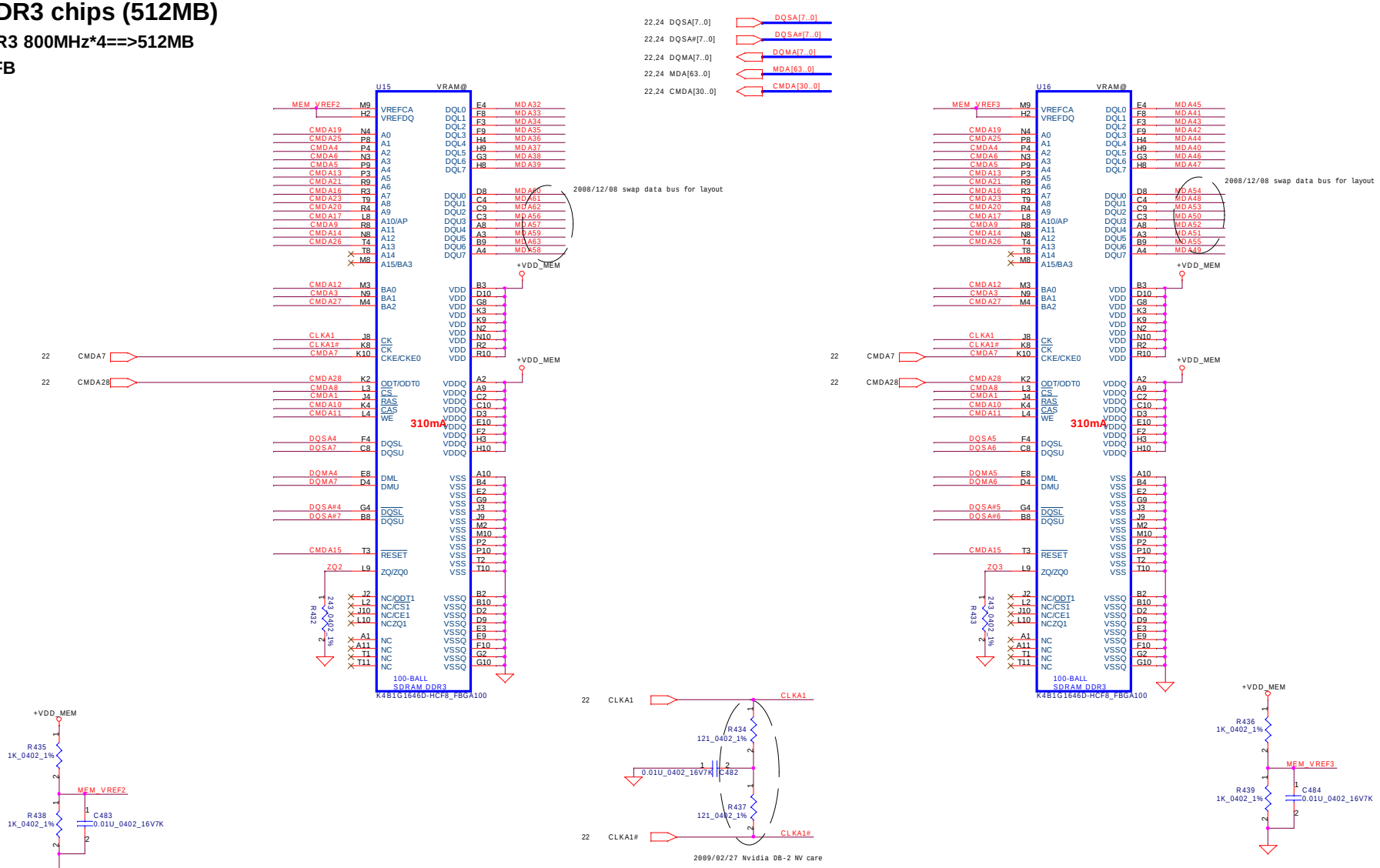

Security Classification	Compal Secret Data		
Issued Date	2008/09/15	Deciphered Date	2009/12/31

THIS SHEET OF ENGINEERING DRAWING IS THE PROPRIETARY PROPERTY OF COMPAL ELECTRONICS, INC. AND CONTAINS CONFIDENTIAL AND TRADE SECRET INFORMATION. THIS SHEET MAY NOT BE TRANSFERED FROM THE CUSTODY OF THE COMPETENT DIVISION OF R&D DEPARTMENT EXCEPT AS AUTHORIZED BY COMPAL ELECTRONICS, INC. NEITHER THIS SHEET NOR THE INFORMATION IT CONTAINS MAY BE USED BY OR DISCLOSED TO ANY THIRD PARTY WITHOUT PRIOR WRITTEN CONSENT OF COMPAL ELECTRONICS, INC.

Compal Electronics, Inc.

Title: VRAM DDR3

Size: Cartier DIS | Document Number | Rev 0.1

Date: Tuesday, December 15, 2009 | Sheet 25 of 54

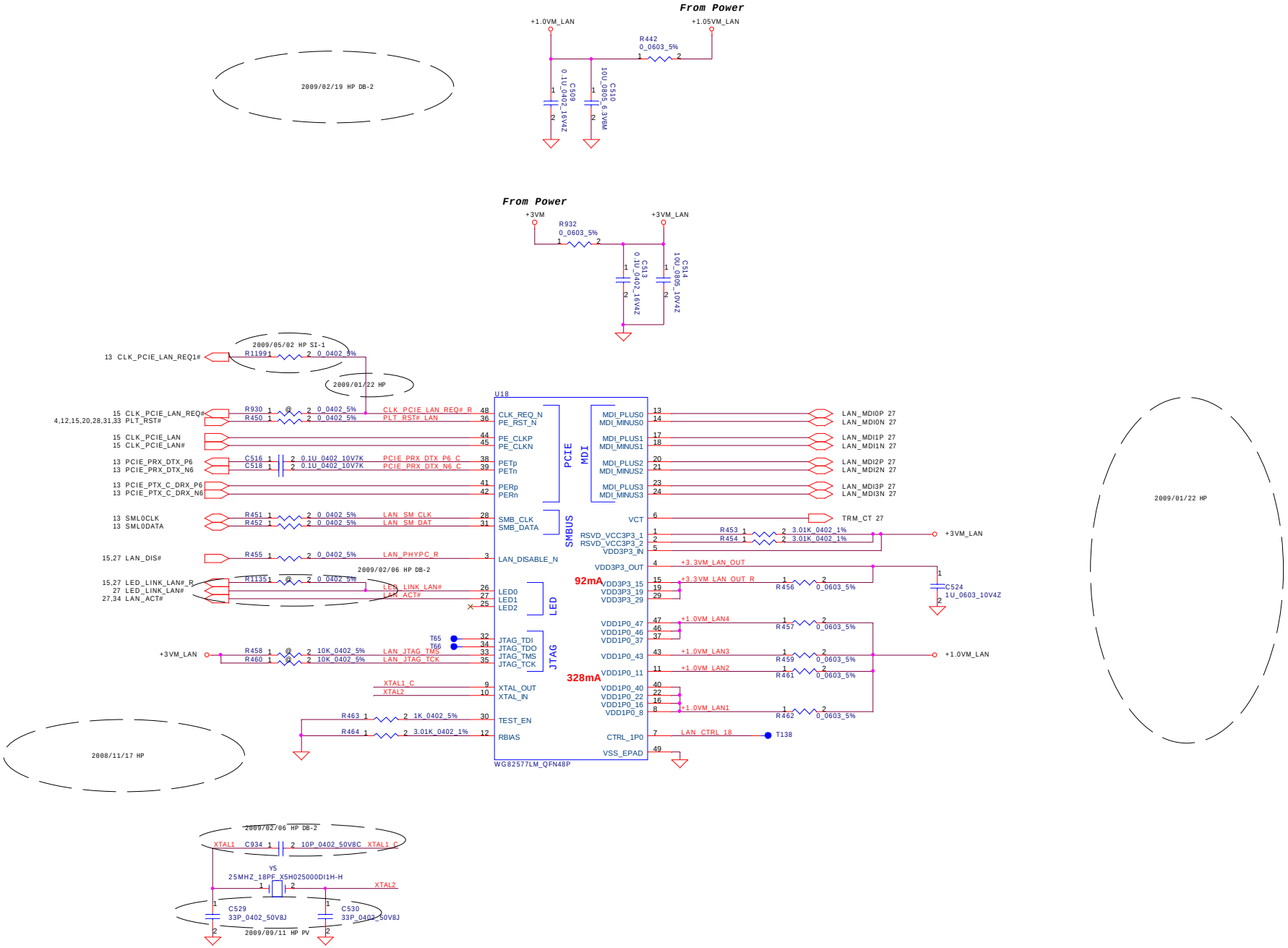

Security Classification	Compal Secret Data		
Issued Date	2008/09/15	Deciphered Date	2009/12/31

THIS SHEET OF ENGINEERING DRAWING IS THE PROPRIETARY PROPERTY OF COMPAL ELECTRONICS, INC. AND CONTAINS CONFIDENTIAL AND TRADE SECRET INFORMATION. THIS SHEET MAY NOT BE TRANSFERED FROM THE CUSTODY OF THE COMPETENT DIVISION OF R&D DEPARTMENT EXCEPT AS AUTHORIZED BY COMPAL ELECTRONICS, INC. NEITHER THIS SHEET NOR THE INFORMATION IT CONTAINS MAY BE USED BY OR DISCLOSED TO ANY THIRD PARTY WITHOUT PRIOR WRITTEN CONSENT OF COMPAL ELECTRONICS, INC.

Compal Electronics, Inc.

Title: **Intel 82566 Nineveh**

Size: | Document Number: **LA-4901P** | Rev: 1.0

Date: Tuesday, December 15, 2009 | Sheet 26 of 54

RJ-45 CONN.

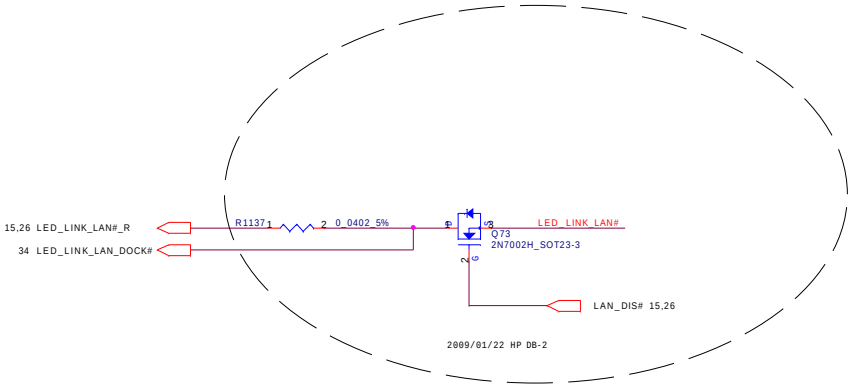

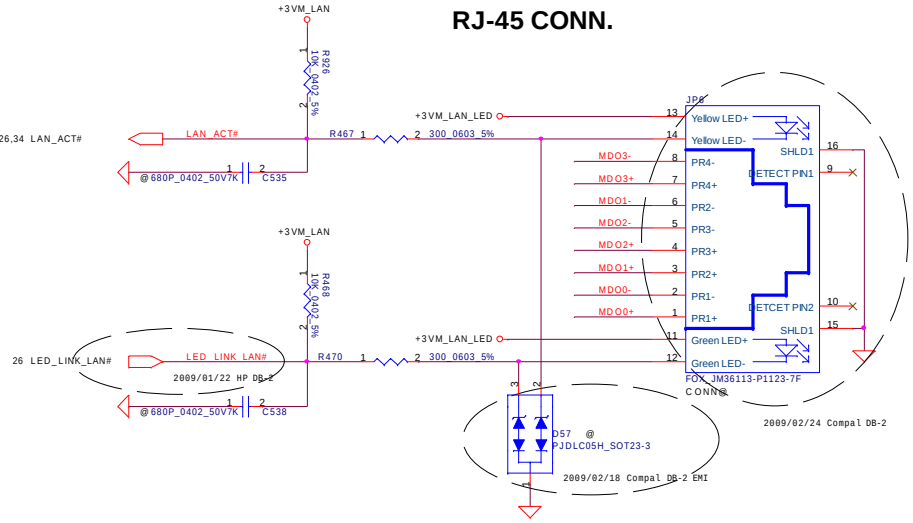

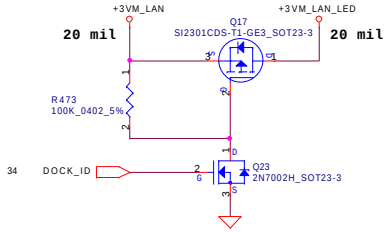

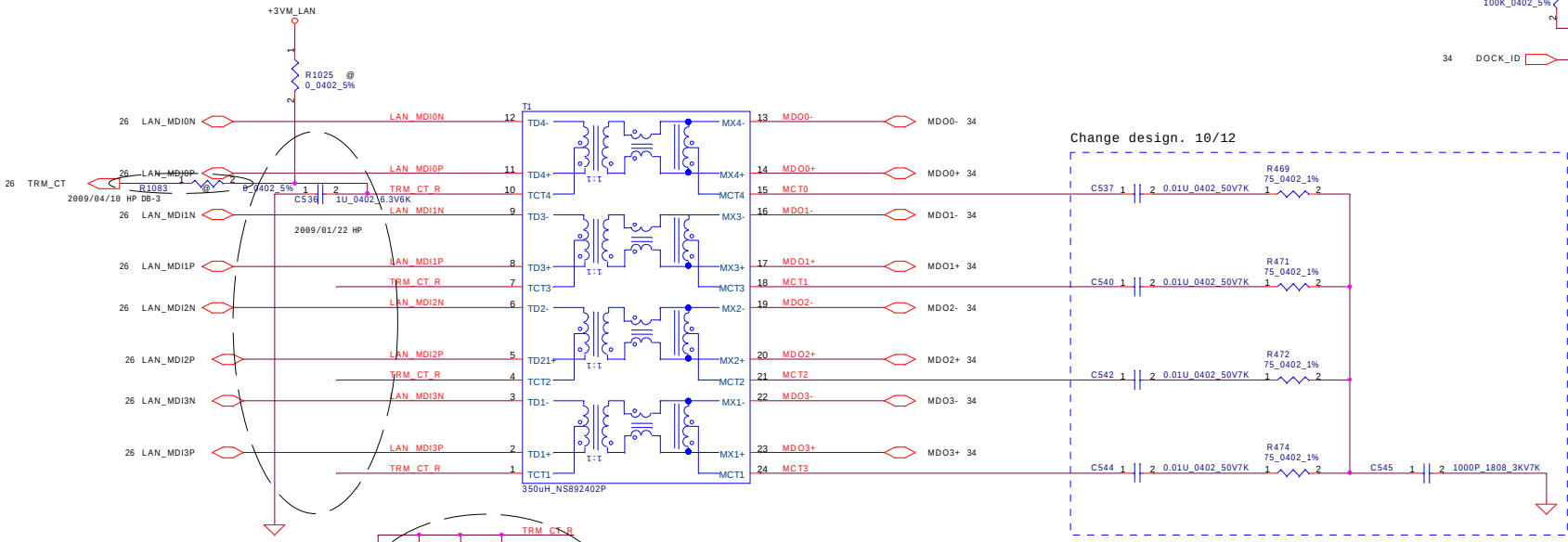

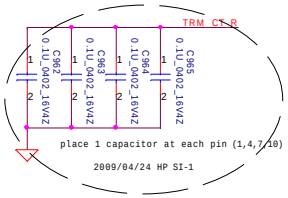

Security Classification	Compal Secret Data		
Issued Date	2008/09/15	Deciphered Date	2009/12/31

THIS SHEET OF ENGINEERING DRAWING IS THE PROPRIETARY PROPERTY OF COMPAL ELECTRONICS, INC. AND CONTAINS CONFIDENTIAL AND TRADE SECRET INFORMATION. THIS SHEET MAY NOT BE TRANSFERED FROM THE CUSTODY OF THE COMPETENT DIVISION OF R&D DEPARTMENT EXCEPT AS AUTHORIZED BY COMPAL ELECTRONICS, INC. NEITHER THIS SHEET NOR THE INFORMATION IT CONTAINS MAY BE USED BY OR DISCLOSED TO ANY THIRD PARTY WITHOUT PRIOR WRITTEN CONSENT OF COMPAL ELECTRONICS, INC.

Compal Electronics, Inc.

Title: **Magnetic & RJ45**

Size: | Document Number: **LA-4901P** | Rev: 1.0

Date: Tuesday, December 15, 2009 | Sheet 27 of 54

WLAN (Halt mini Card)

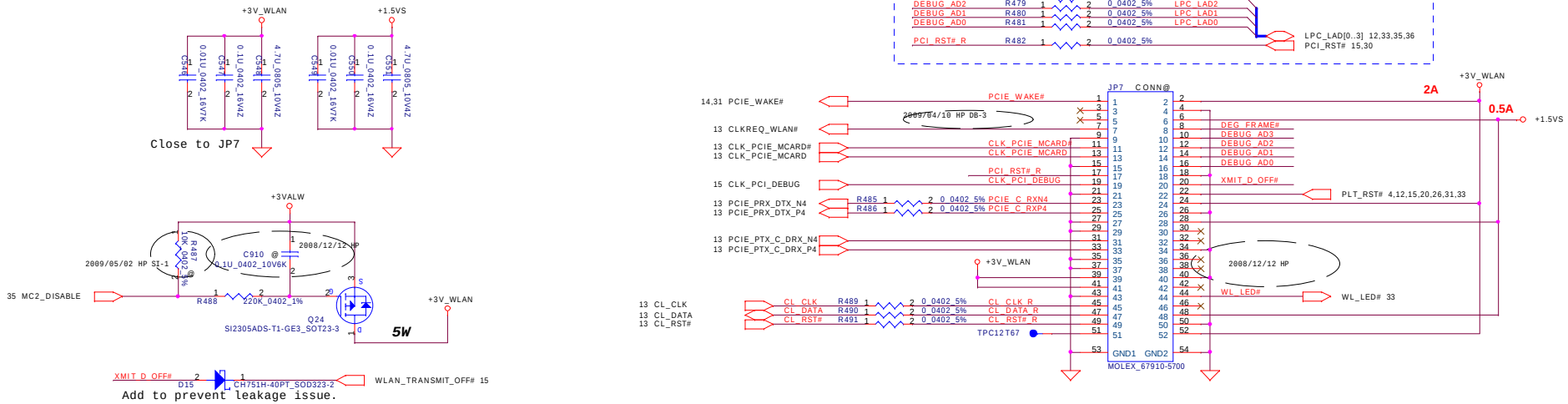

WWAN (Full mini Card)

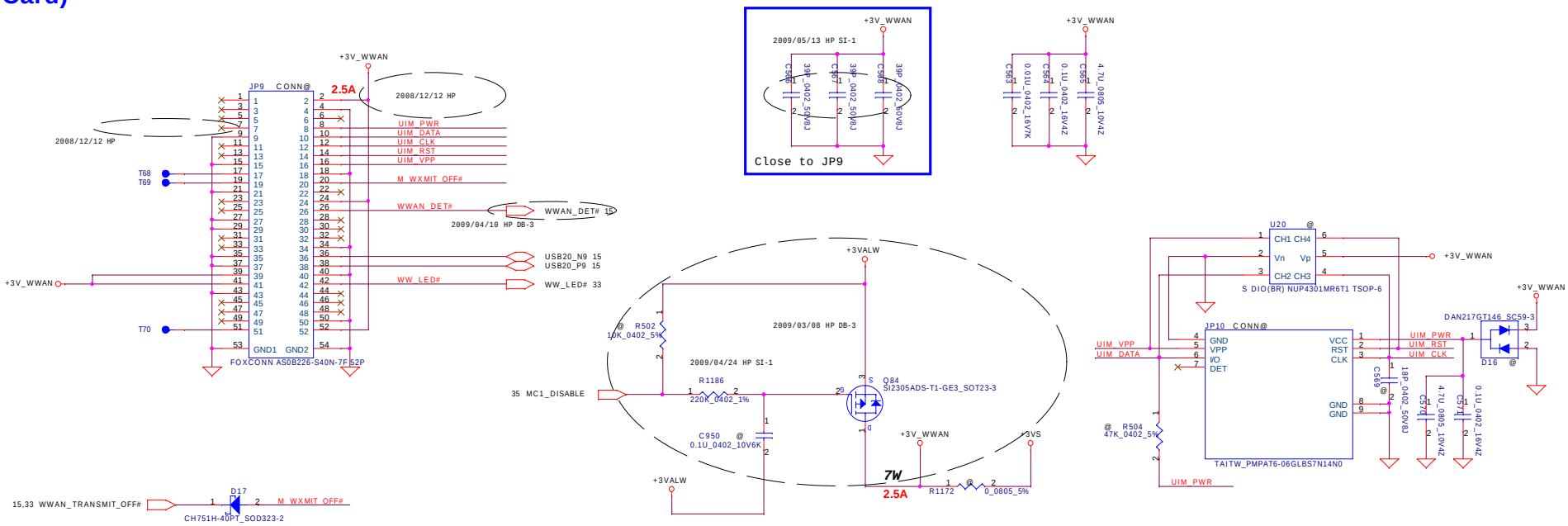

Security Classification	Compal Secret Data		
Issued Date	2008/09/15	Deciphered Date	2009/12/31

THIS SHEET OF ENGINEERING DRAWING IS THE PROPRIETARY PROPERTY OF COMPAL ELECTRONICS, INC. AND CONTAINS CONFIDENTIAL AND TRADE SECRET INFORMATION. THIS SHEET MAY NOT BE TRANSFERED FROM THE CUSTODY OF THE COMPETENT DIVISION OF R&D DEPARTMENT EXCEPT AS AUTHORIZED BY COMPAL ELECTRONICS, INC. NEITHER THIS SHEET NOR THE INFORMATION IT CONTAINS MAY BE USED BY OR DISCLOSED TO ANY THIRD PARTY WITHOUT PRIOR WRITTEN CONSENT OF COMPAL ELECTRONICS, INC.

Compal Electronics, Inc.

Title: **WLAN&WWAN**

Size	Document Number	Rev
	LA-4901P	1.0

Date: Tuesday, December 15, 2009 Sheet 28 of 54

SATA HDD CONN.

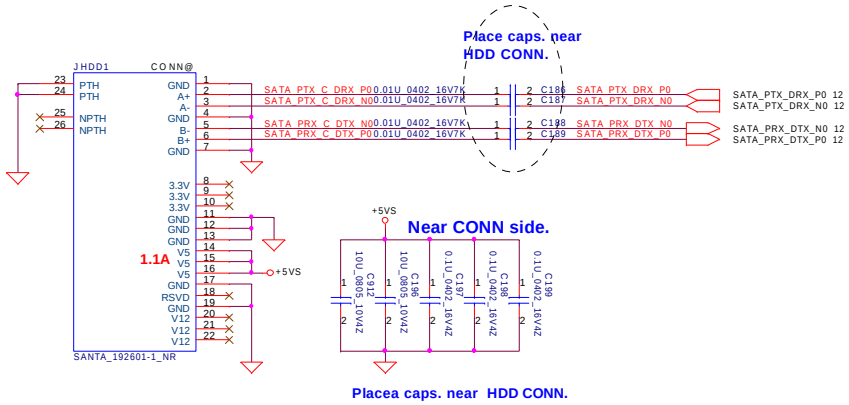

SATA ODD CONN.

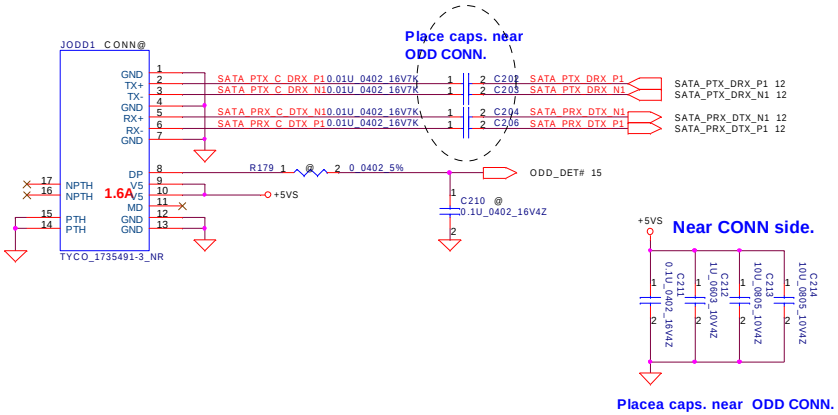

NAND FLASH

2009/04/24 SI-1

2009/04/24 SI-1

2009/08/30 HP PV

2009/02/26 HP DB-2

E-SATA Redriver

2009/05/12 HP SI-1
2009/06/30 HP SI-2
Change TI to Pericom
PI3EQX4951ST_PEND and 1.5V power rail option 6/30

2009/09/10 HP PV

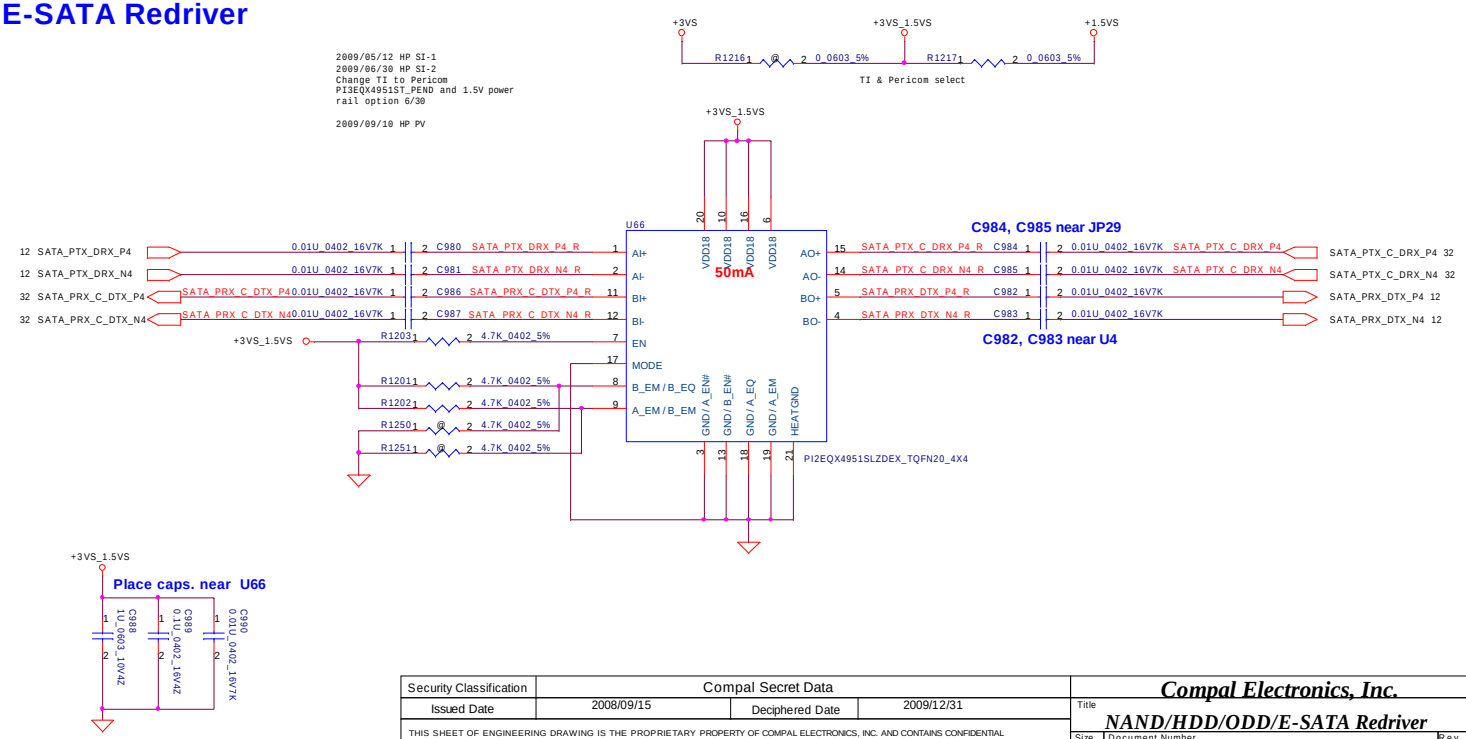

Security Classification	Compal Secret Data		
Issued Date	2008/09/15	Deciphered Date	2009/12/31

THIS SHEET OF ENGINEERING DRAWING IS THE PROPRIETARY PROPERTY OF COMPAL ELECTRONICS, INC. AND CONTAINS CONFIDENTIAL AND TRADE SECRET INFORMATION. THIS SHEET MAY NOT BE TRANSFERED FROM THE CUSTODY OF THE COMPETENT DIVISION OF R&D DEPARTMENT EXCEPT AS AUTHORIZED BY COMPAL ELECTRONICS, INC. NEITHER THIS SHEET NOR THE INFORMATION IT CONTAINS MAY BE USED BY OR DISCLOSED TO ANY THIRD PARTY WITHOUT PRIOR WRITTEN CONSENT OF COMPAL ELECTRONICS, INC.

Compal Electronics, Inc.

Title: NAND/HDD/ODD/E-SATA Redriver

Size | Document Number: LA-4901P | Rev 1.0

Date: Tuesday, December 15, 2009 | Sheet 29 of 54

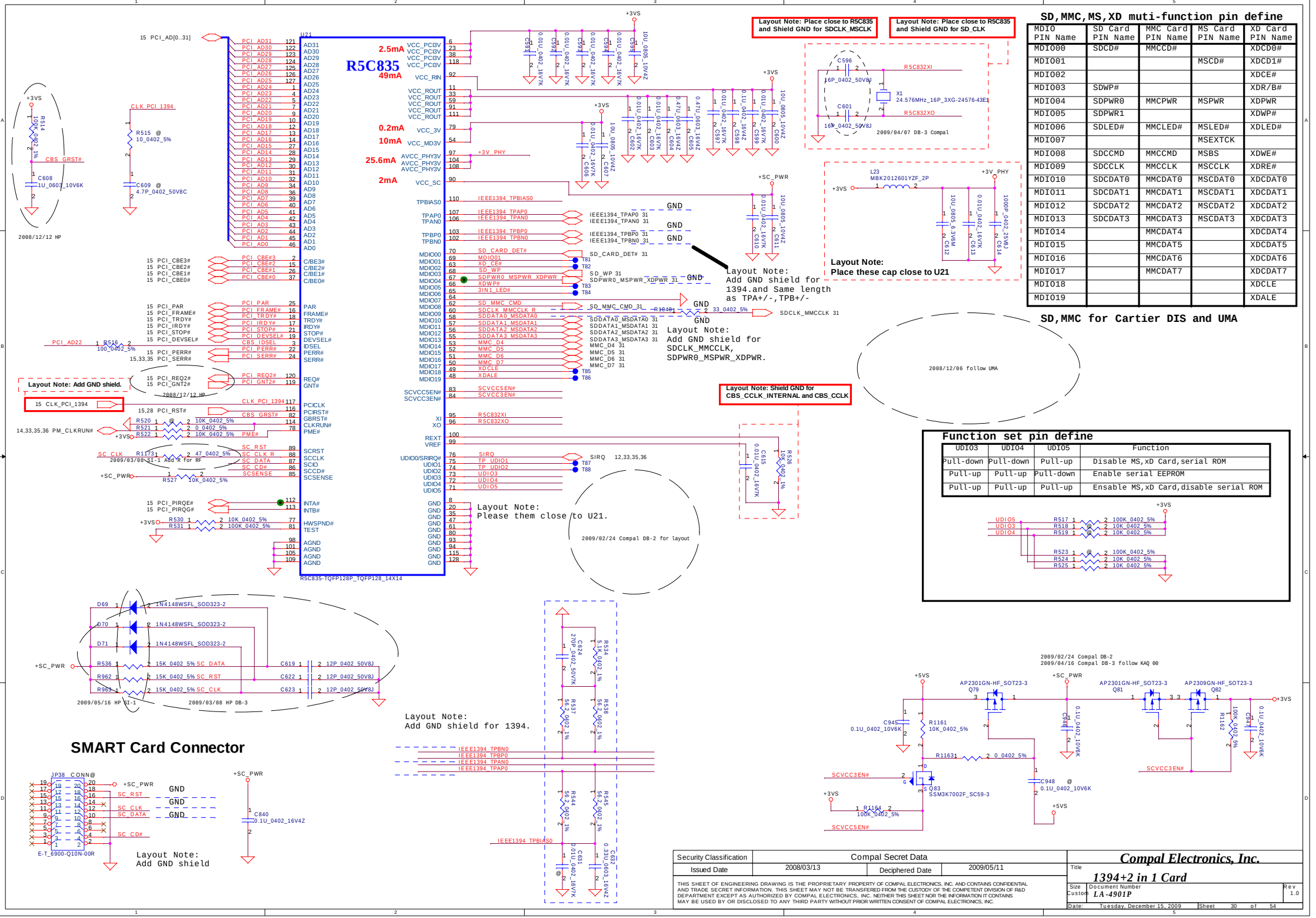

SD,MMC,MS,XD muti-function pin define

MDIO PIN Name	SD Card PIN Name	MMC Card PIN Name	MS Card PIN Name	XD Card PIN Name
MDIO00	SDCD#	MMCCD#		XDCD0#
MDIO01			MSCD#	XDCD1#
MDIO02				XDCE#
MDIO03	SDWP#			XDR/B#
MDIO04	SDPWR0	MMCPWR	MSPWR	XDPWR
MDIO05	SDPWR1			XDWP#
MDIO06	SDLED#	MMCLED#	MSLED#	XDLED#
MDIO07			MSEXTCK	
MDIO08	SDCCMD	MMCCMD	MSBS	XDWE#
MDIO09	SDCCLK	MMCCLK	MSCCLK	XDRE#
MDIO10	SDCDAT0	MMCDAT0	MSCDAT0	XDCDAT0
MDIO11	SDCDAT1	MMCDAT1	MSCDAT1	XDCDAT1
MDIO12	SDCDAT2	MMCDAT2	MSCDAT2	XDCDAT2
MDIO13	SDCDAT3	MMCDAT3	MSCDAT3	XDCDAT3
MDIO14		MMCDAT4		XDCDAT4
MDIO15		MMCDAT5		XDCDAT5
MDIO16		MMCDAT6		XDCDAT6
MDIO17		MMCDAT7		XDCDAT7
MDIO18				XDCLE
MDIO19				XDALE

SD,MMC for Cartier DIS and UMA

Function set pin define

UDIO3	UDIO4	UDIO5	Function
Pull-down	Pull-down	Pull-up	Disable MS,xD Card,serial ROM
Pull-up	Pull-up	Pull-down	Enable serial EEPROM
Pull-up	Pull-up	Pull-up	Ensable MS,xD Card,disable serial ROM

SMART Card Connector

Security Classification	Compal Secret Data		
Issued Date	2008/03/13	Deciphered Date	2009/05/11

THIS SHEET OF ENGINEERING DRAWING IS THE PROPRIETARY PROPERTY OF COMPAL ELECTRONICS, INC. AND CONTAINS CONFIDENTIAL AND TRADE SECRET INFORMATION. THIS SHEET MAY NOT BE TRANSFERED FROM THE CUSTODY OF THE COMPETENT DIVISION OF R&D DEPARTMENT EXCEPT AS AUTHORIZED BY COMPAL ELECTRONICS, INC. NEITHER THIS SHEET NOR THE INFORMATION IT CONTAINS MAY BE USED BY OR DISCLOSED TO ANY THIRD PARTY WITHOUT PRIOR WRITTEN CONSENT OF COMPAL ELECTRONICS, INC.

Compal Electronics, Inc.

Title: *1394+2 in 1 Card*

Size: Custom | Document Number: *LA-4901P* | Rev: 1.0

Date: Tuesday, December 15, 2009 | Sheet 30 of 54

AUDIO BOARD CONNECTOR (MALE)

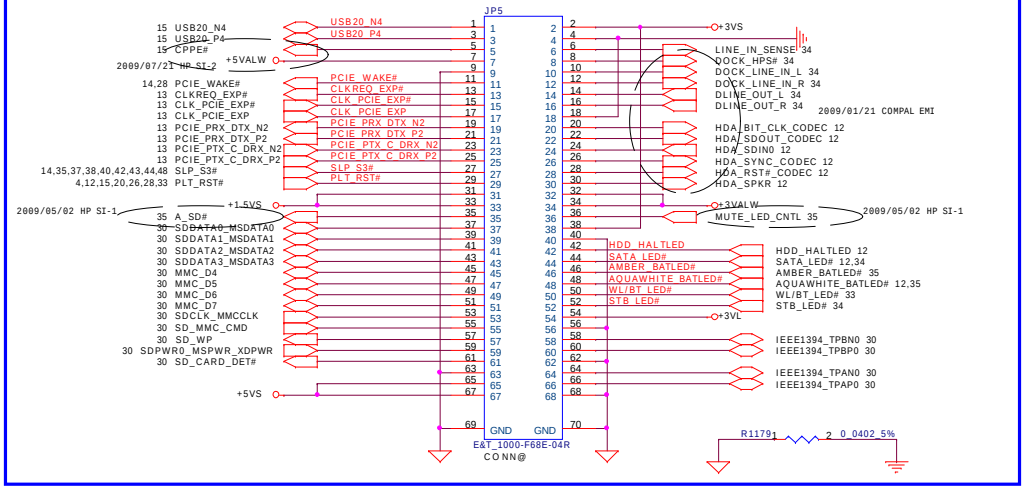

INT_KBD CONN.

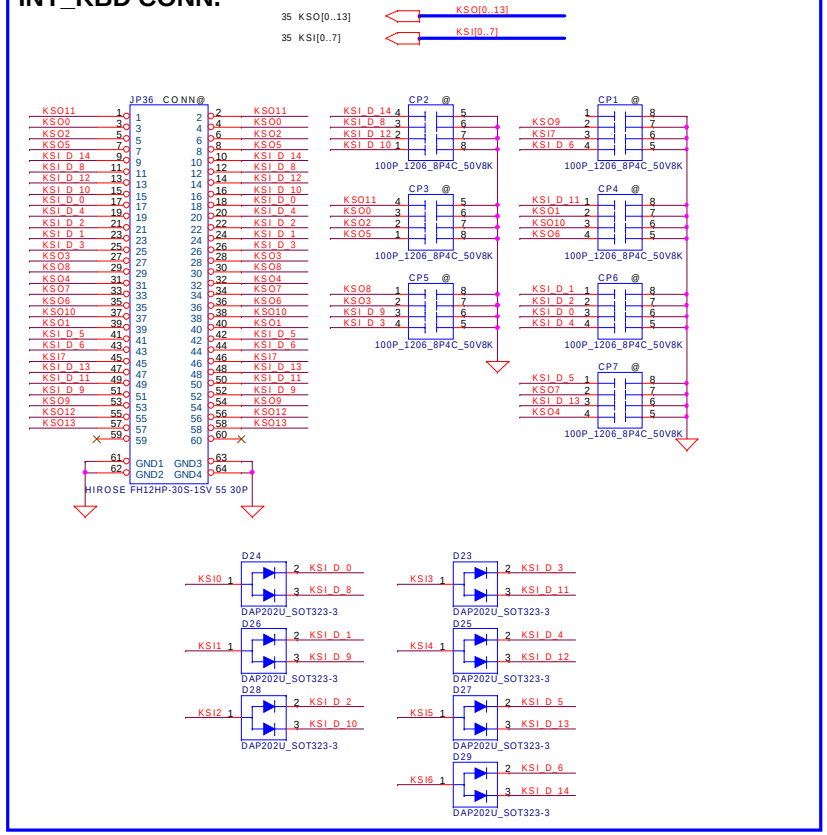

Power Button

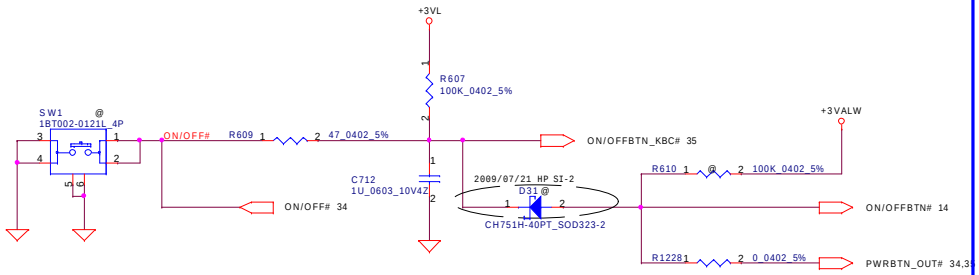

MDC 1.5 Conn.

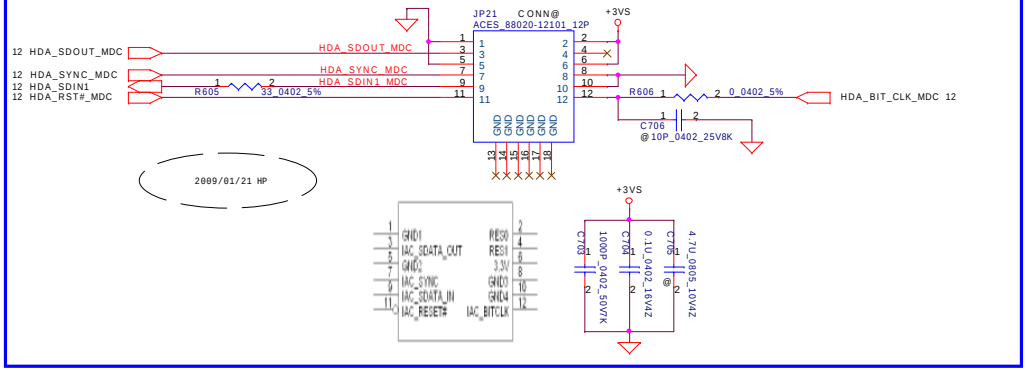

CAP SWITCH BOARD.

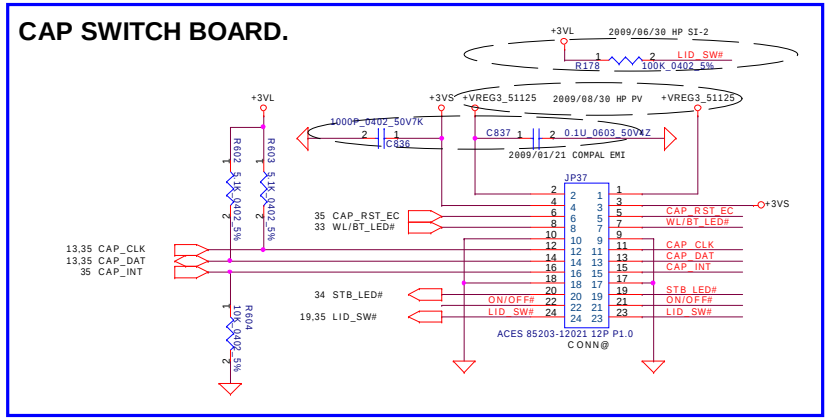

Security Classification	Compal Secret Data		
Issued Date	2008/09/15	Deciphered Date	2009/12/31

THIS SHEET OF ENGINEERING DRAWING IS THE PROPRIETARY PROPERTY OF COMPAL ELECTRONICS, INC. AND CONTAINS CONFIDENTIAL AND TRADE SECRET INFORMATION. THIS SHEET MAY NOT BE TRANSFERED FROM THE CUSTODY OF THE COMPETENT DIVISION OF R&D DEPARTMENT EXCEPT AS AUTHORIZED BY COMPAL ELECTRONICS, INC. NEITHER THIS SHEET NOR THE INFORMATION IT CONTAINS MAY BE USED BY OR DISCLOSED TO ANY THIRD PARTY WITHOUT PRIOR WRITTEN CONSENT OF COMPAL ELECTRONICS, INC.

Compal Electronics, Inc.

Title: **MDC/KBD/ON_OFF/CAP**

Size | Document Number: **LA-4901P** | Rev: 1.0

Date: Tuesday, December 15, 2009 | Sheet 31 of 54

USB CONN.

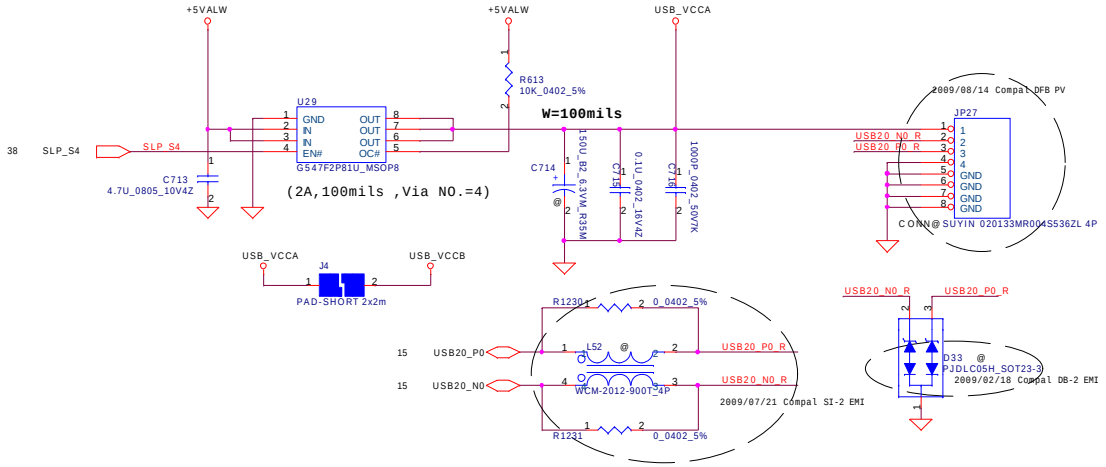

ACCELEROMETER

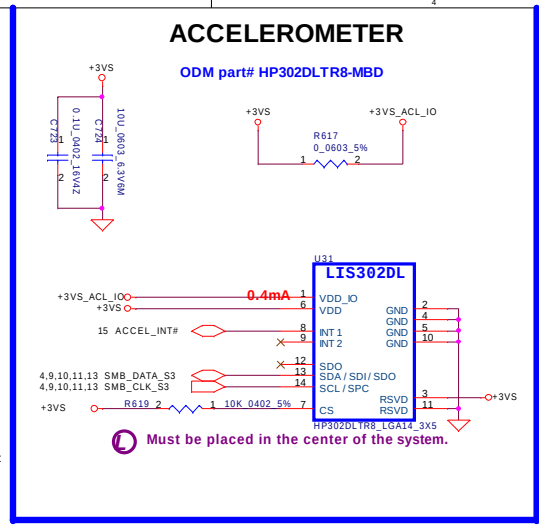

BT Connector

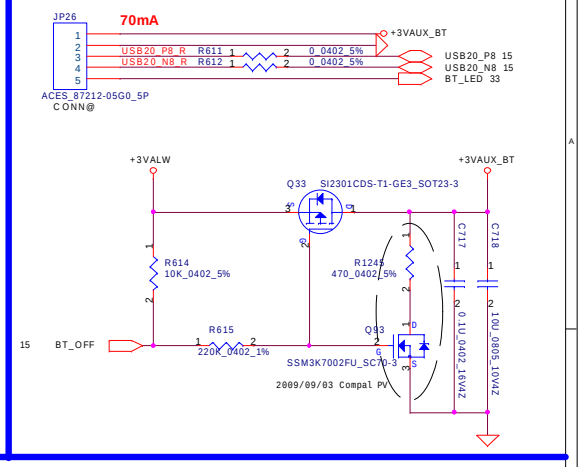

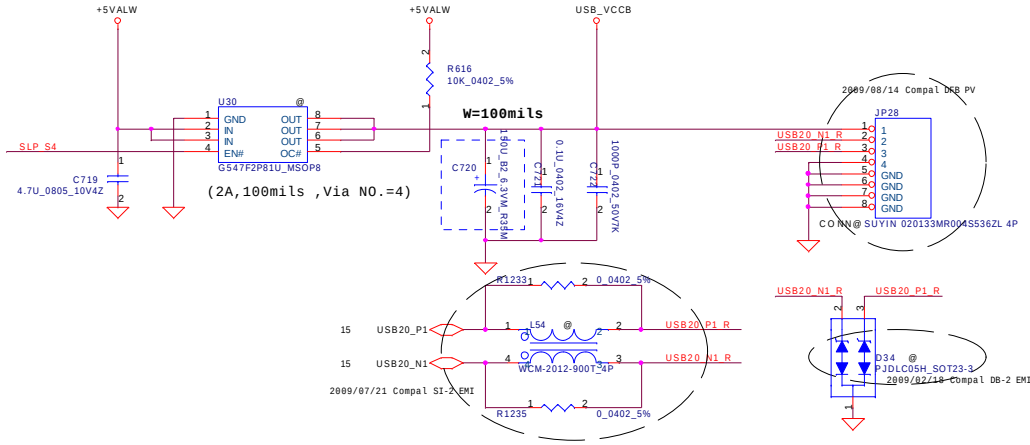

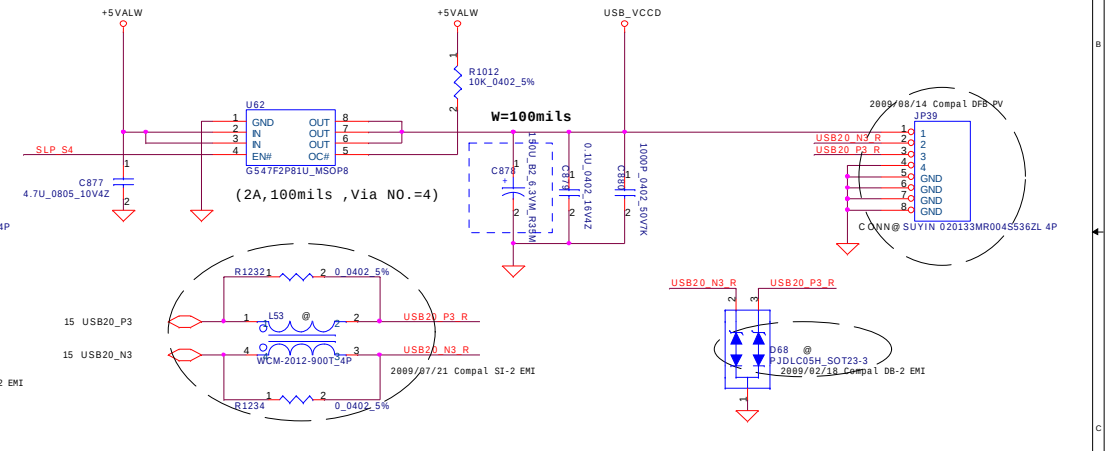

USB and E-SATA Combo CONN.

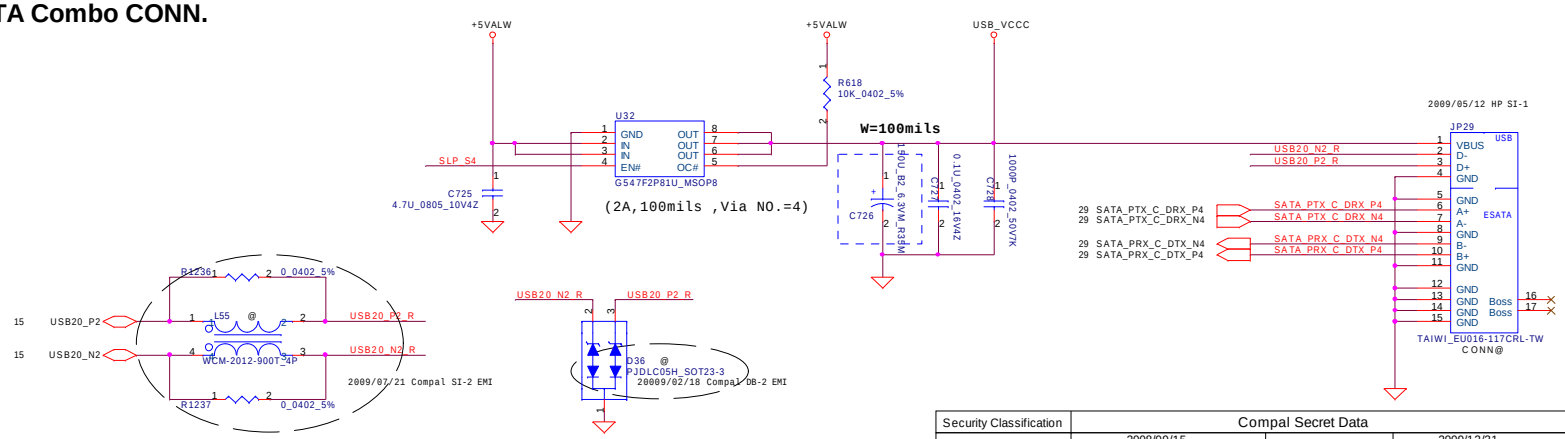

Security Classification	Compal Secret Data		
Issued Date	2008/09/15	Deciphered Date	2009/12/31

THIS SHEET OF ENGINEERING DRAWING IS THE PROPRIETARY PROPERTY OF COMPAL ELECTRONICS, INC. AND CONTAINS CONFIDENTIAL AND TRADE SECRET INFORMATION. THIS SHEET MAY NOT BE TRANSFERED FROM THE CUSTODY OF THE COMPETENT DIVISION OF R&D DEPARTMENT EXCEPT AS AUTHORIZED BY COMPAL ELECTRONICS, INC. NEITHER THIS SHEET NOR THE INFORMATION IT CONTAINS MAY BE USED BY OR DISCLOSED TO ANY THIRD PARTY WITHOUT PRIOR WRITTEN CONSENT OF COMPAL ELECTRONICS, INC.

Compal Electronics, Inc.

Title: **USB/BT/E-SATA Conn/Acclerometer**

Size	Document Number	Rev
	LA-4901P	1.0

Date: Tuesday, December 15, 2009 | Sheet 32 of 54

LPC Debug Port

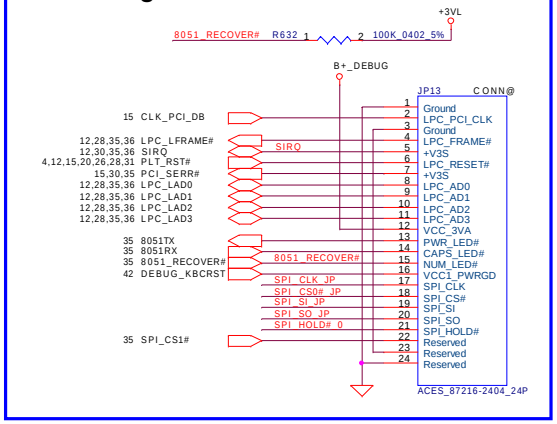

Finger Printer

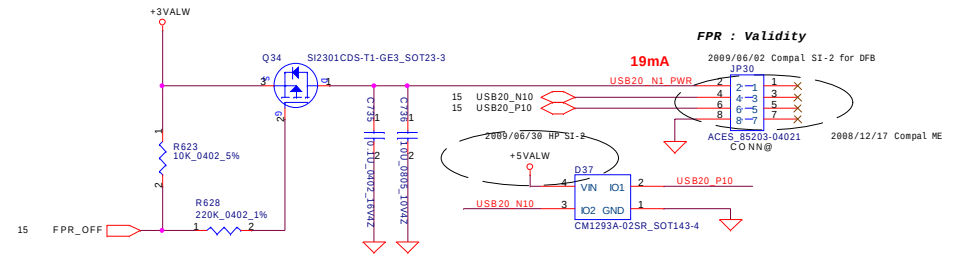

BIOS ROM(16MB)

8MB SPI ROM

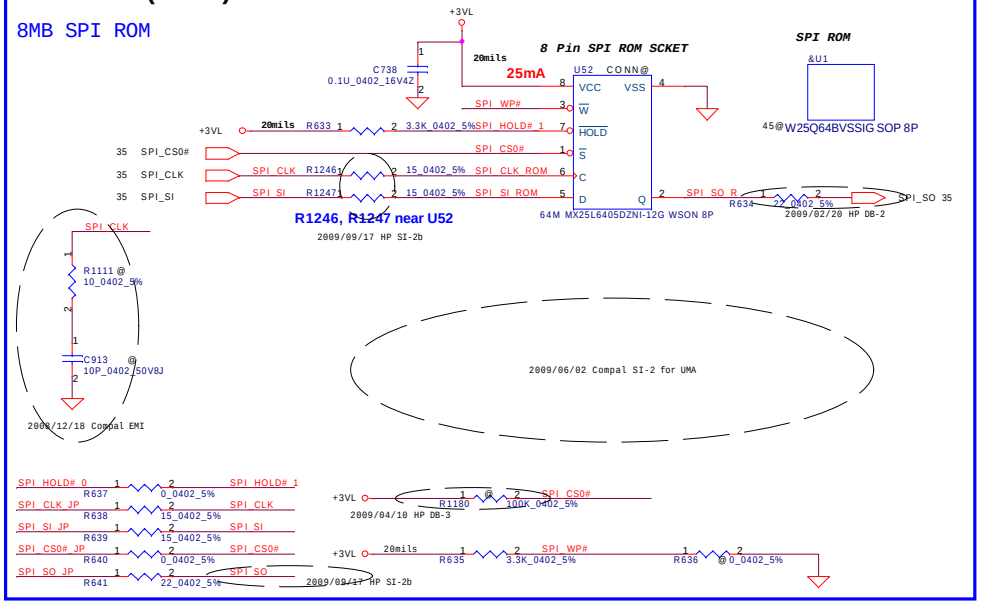

TrackPoint CONN.

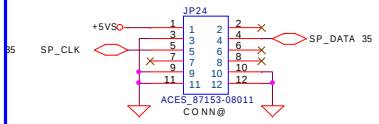

T/P CONN.

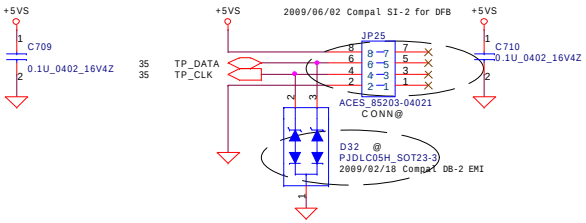

WLAN/WWAN/BT LED

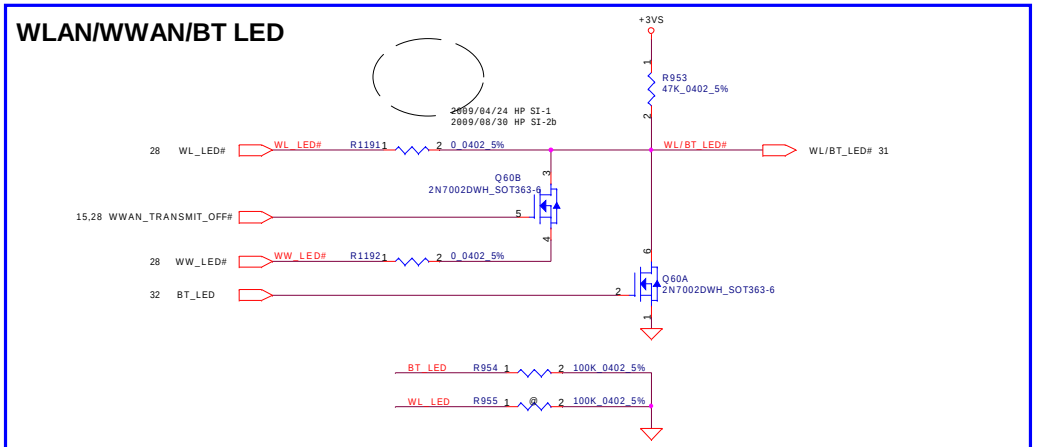

TPM1.2 on board

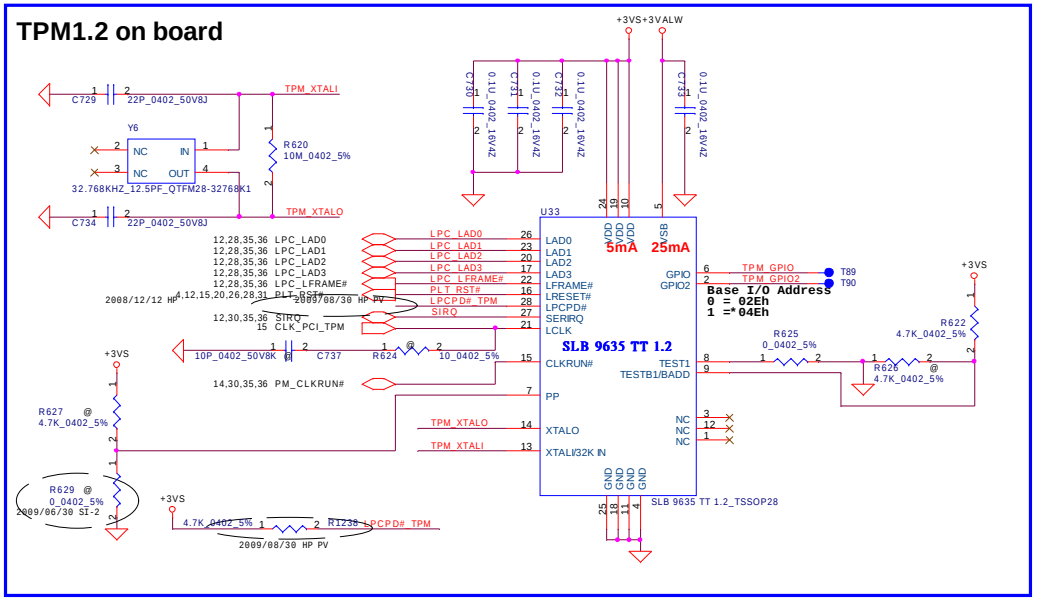

Security Classification	Compal Secret Data		
Issued Date	2008/09/15	Deciphered Date	2009/12/31

THIS SHEET OF ENGINEERING DRAWING IS THE PROPRIETARY PROPERTY OF COMPAL ELECTRONICS, INC. AND CONTAINS CONFIDENTIAL AND TRADE SECRET INFORMATION. THIS SHEET MAY NOT BE TRANSFERED FROM THE CUSTODY OF THE COMPETENT DIVISION OF R&D DEPARTMENT EXCEPT AS AUTHORIZED BY COMPAL ELECTRONICS, INC. NEITHER THIS SHEET NOR THE INFORMATION IT CONTAINS MAY BE USED BY OR DISCLOSED TO ANY THIRD PARTY WITHOUT PRIOR WRITTEN CONSENT OF COMPAL ELECTRONICS, INC.

Compal Electronics, Inc.

Title: FPR/BIOS/LPC DEBUG/LED/TPM/TP

Size | Document Number: LA-4901P | Rev: 1.0

Date: Tuesday, December 15, 2009 | Sheet 33 of 54

DOCK CONN. 184PIN

DOCKING CONNECT

(1) PCI Express x1 channels
(2) PS/2 Interfaces
(2) USB 2.channels
(2) SATA Channels
(2) Display Port Channels
(1) Serial Port
(1) Parallel Port
(1) Line In
(1) Line Out
(1) RJ45 (10/100/1000)
(1) VGA
(1) 2 LAN indicator LED's
(1) Power Button
(1) I2C interface

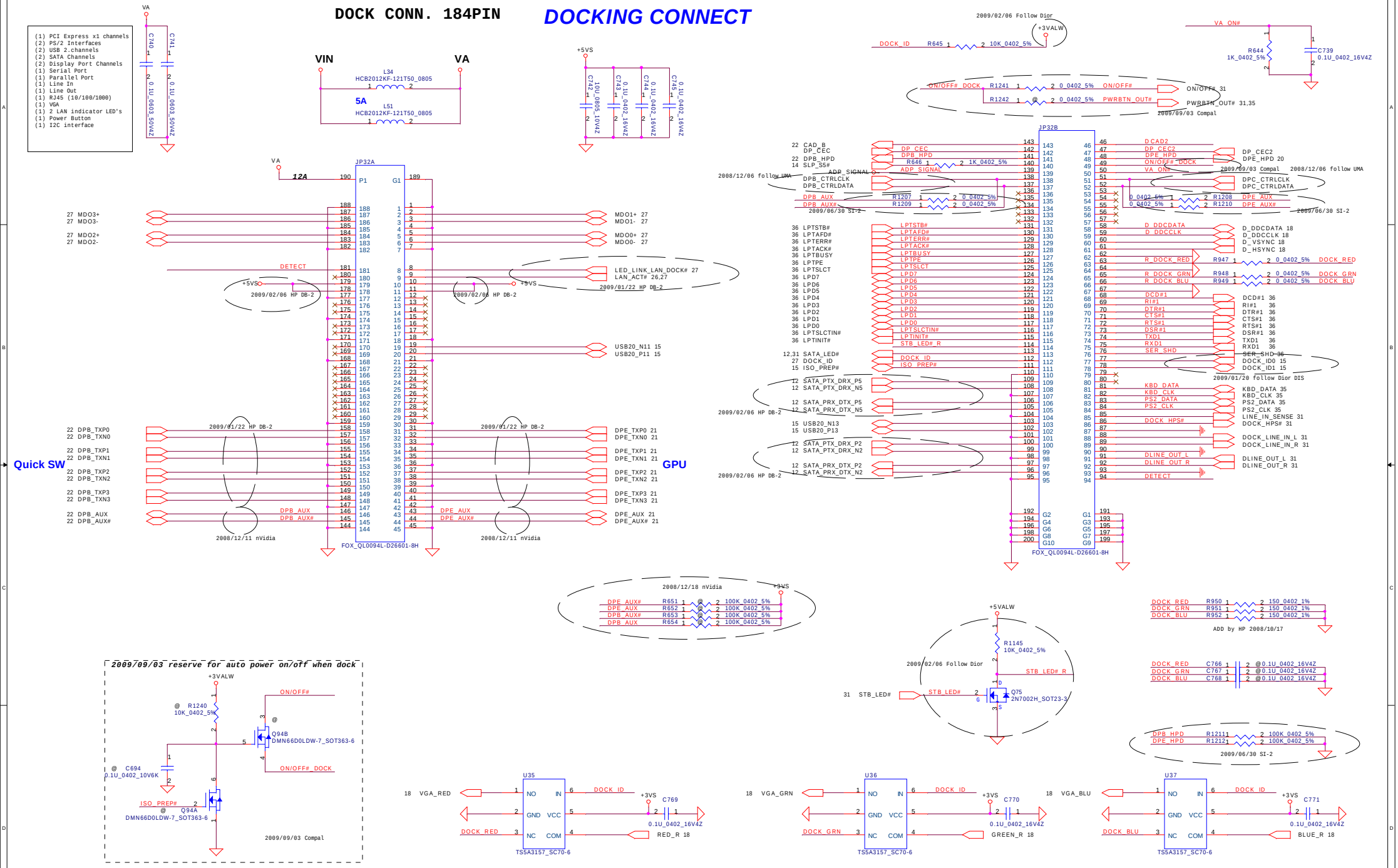

IN	NC<-->COM	NO<-->COM
L	ON	OFF
H	OFF	ON

Security Classification	Compal Secret Data		
Issued Date	2008/09/15	Deciphered Date	2009/12/31

THIS SHEET OF ENGINEERING DRAWING IS THE PROPRIETARY PROPERTY OF COMPAL ELECTRONICS, INC. AND CONTAINS CONFIDENTIAL AND TRADE SECRET INFORMATION. THIS SHEET MAY NOT BE TRANSFERED FROM THE CUSTODY OF THE COMPETENT DIVISION OF R&D DEPARTMENT EXCEPT AS AUTHORIZED BY COMPAL ELECTRONICS, INC. NEITHER THIS SHEET NOR THE INFORMATION IT CONTAINS MAY BE USED BY OR DISCLOSED TO ANY THIRD PARTY WITHOUT PRIOR WRITTEN CONSENT OF COMPAL ELECTRONICS, INC.

Compal Electronics, Inc.

Title: **DOCK CONN**

Size: Custom | Document Number: LA-4901P | Rev: 1.0

Date: Tuesday, December 15, 2009 | Sheet 34 of 54

System Board ID Detect

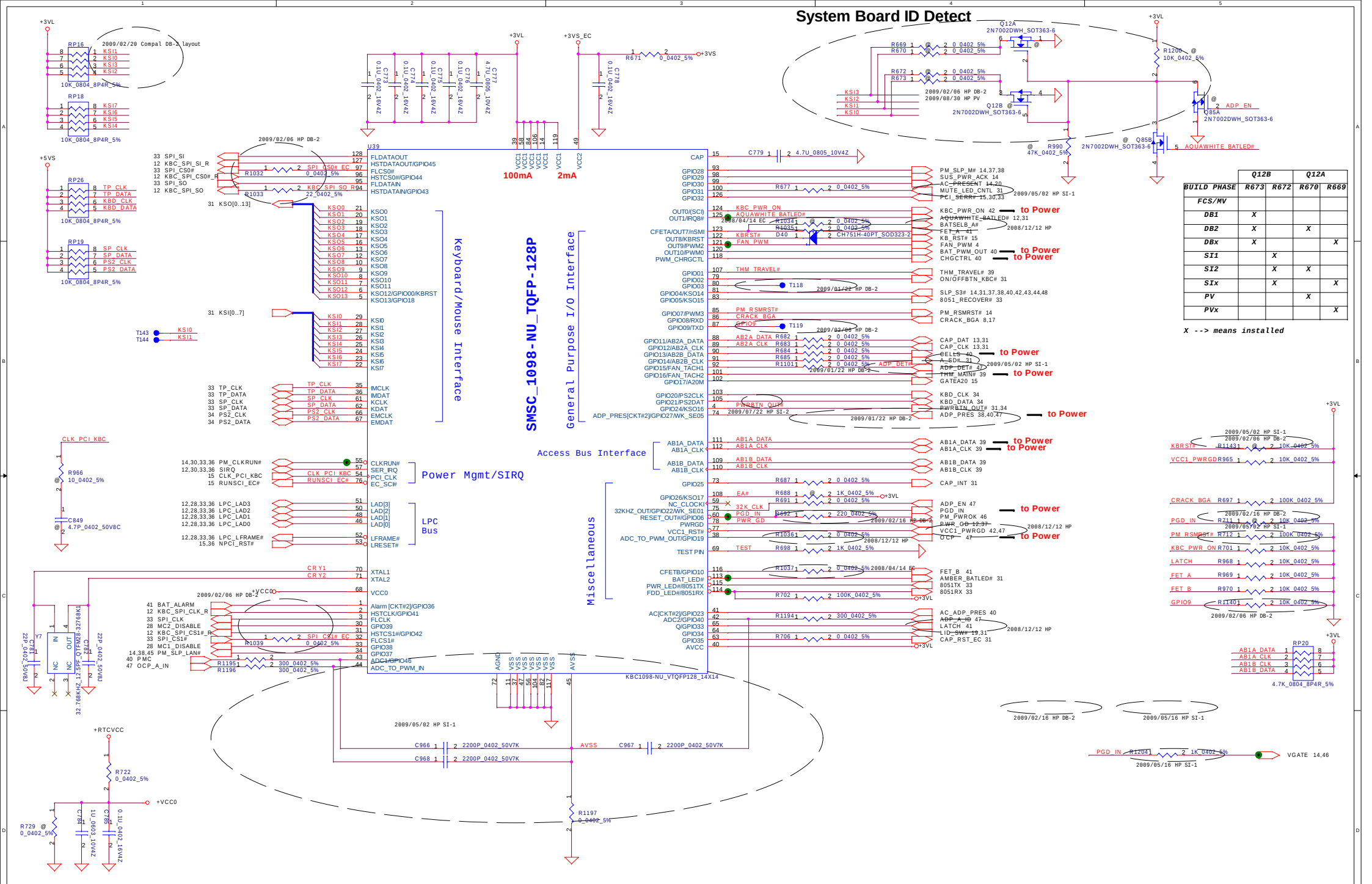

BUILD PHASE	Q12B R673	Q12B R672	Q12A R670	Q12A R669
FCS/MV				
DB1	X			
DB2	X		X	
DBx	X			X
SI1		X		
SI2		X	X	
SIx		X		X
PV			X	
PVx				X

X --> means installed

Security Classification	Compal Secret Data		
Issued Date	2008/09/15	Deciphered Date	2009/12/31

THIS SHEET OF ENGINEERING DRAWING IS THE PROPRIETARY PROPERTY OF COMPAL ELECTRONICS, INC. AND CONTAINS CONFIDENTIAL AND TRADE SECRET INFORMATION. THIS SHEET MAY NOT BE TRANSFERED FROM THE CUSTODY OF THE COMPETENT DIVISION OF R&D DEPARTMENT EXCEPT AS AUTHORIZED BY COMPAL ELECTRONICS, INC. NEITHER THIS SHEET NOR THE INFORMATION IT CONTAINS MAY BE USED BY OR DISCLOSED TO ANY THIRD PARTY WITHOUT PRIOR WRITTEN CONSENT OF COMPAL ELECTRONICS, INC.

Compal Electronics, Inc.

Title: **KBC1098**

Size: | Document Number: *LA-4901P* | Rev: 1.0

Date: Tuesday, December 15, 2009 | Sheet 35 of 54

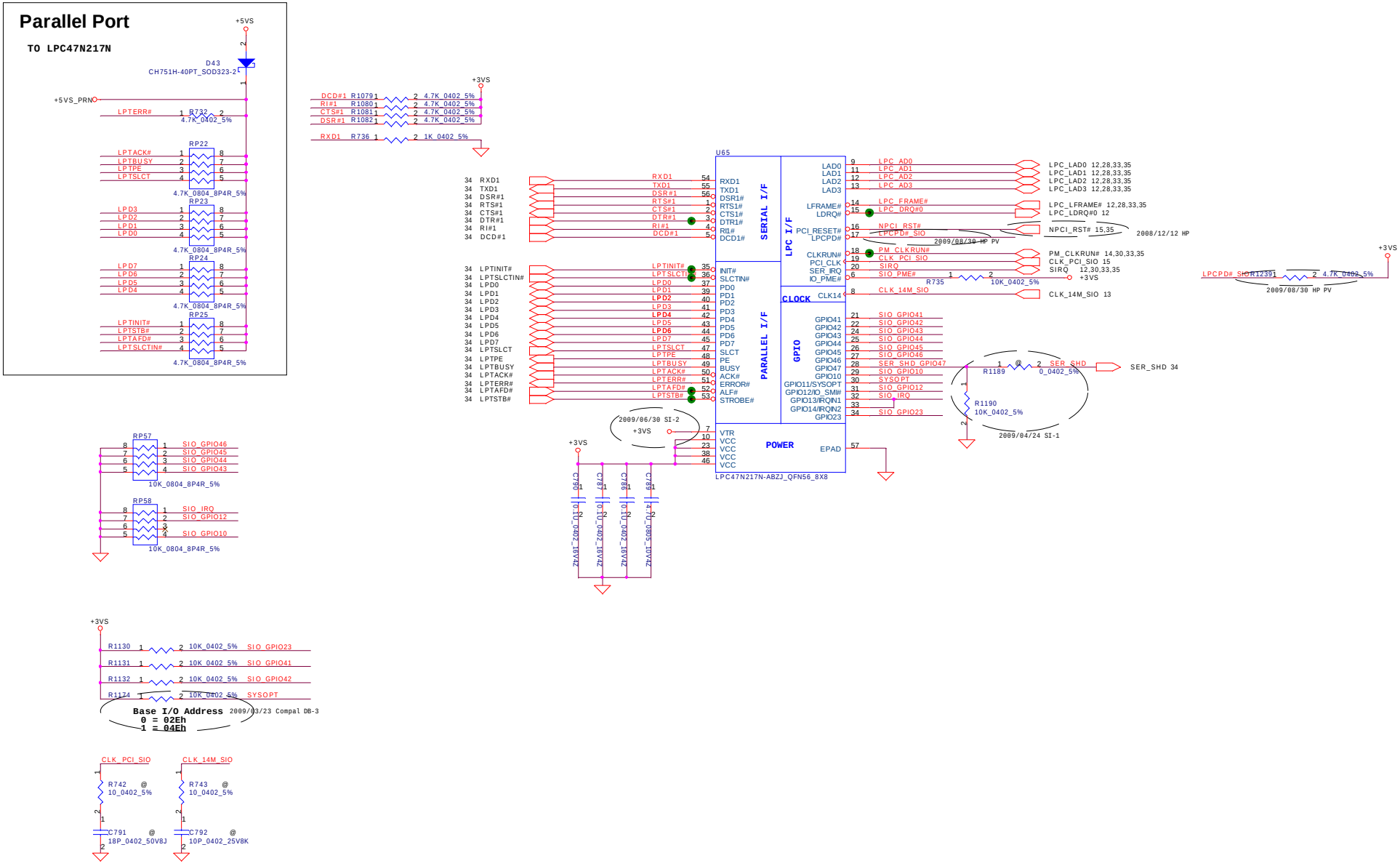

Security Classification	Compal Secret Data		
Issued Date	2008/09/09	Deciphered Date	2009/09/09

THIS SHEET OF ENGINEERING DRAWING IS THE PROPRIETARY PROPERTY OF COMPAL ELECTRONICS, INC. AND CONTAINS CONFIDENTIAL AND TRADE SECRET INFORMATION. THIS SHEET MAY NOT BE TRANSFERED FROM THE CUSTODY OF THE COMPETENT DIVISION OF R&D DEPARTMENT EXCEPT AS AUTHORIZED BY COMPAL ELECTRONICS, INC. NEITHER THIS SHEET NOR THE INFORMATION IT CONTAINS MAY BE USED BY OR DISCLOSED TO ANY THIRD PARTY WITHOUT PRIOR WRITTEN CONSENT OF COMPAL ELECTRONICS, INC.

Compal Electronics, Inc.

Title: **SUPER I/O LPC47N217N-ABZJ**

Size | Document Number: LA-4901P | Rev: 1.0

Date: Tuesday, December 15, 2009 | Sheet 36 of 54

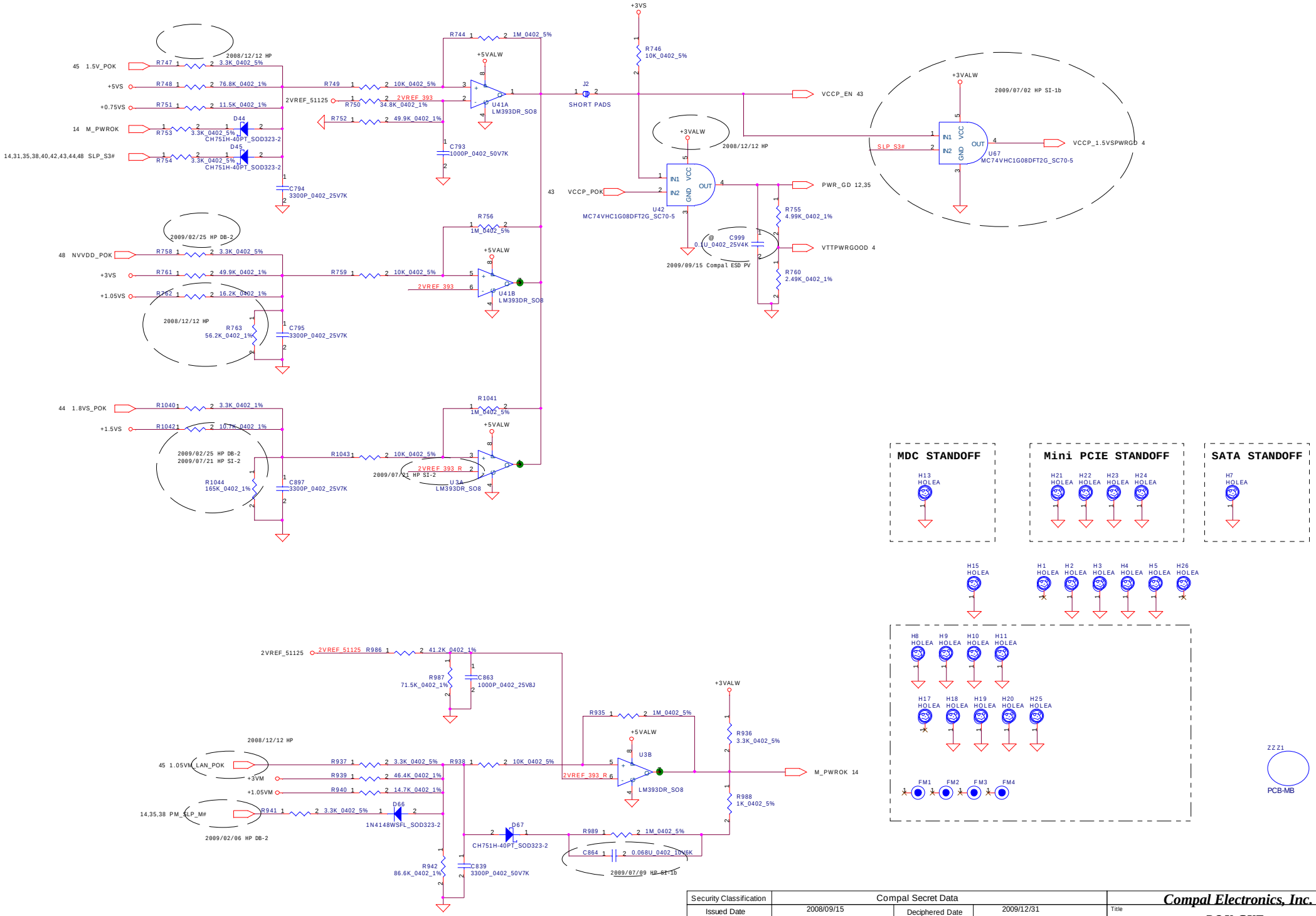

Security Classification	Compal Secret Data		
Issued Date	2008/09/15	Deciphered Date	2009/12/31

THIS SHEET OF ENGINEERING DRAWING IS THE PROPRIETARY PROPERTY OF COMPAL ELECTRONICS, INC. AND CONTAINS CONFIDENTIAL AND TRADE SECRET INFORMATION. THIS SHEET MAY NOT BE TRANSFERED FROM THE CUSTODY OF THE COMPETENT DIVISION OF R&D DEPARTMENT EXCEPT AS AUTHORIZED BY COMPAL ELECTRONICS, INC. NEITHER THIS SHEET NOR THE INFORMATION IT CONTAINS MAY BE USED BY OR DISCLOSED TO ANY THIRD PARTY WITHOUT PRIOR WRITTEN CONSENT OF COMPAL ELECTRONICS, INC.

Compal Electronics, Inc.

Title: **POK CKT**

Size: | Document Number: **LA-4901P** | Rev: 1.0

Date: Tuesday, December 15, 2009 | Sheet 37 of 54

+1.05VM to +1.05VS Transfer

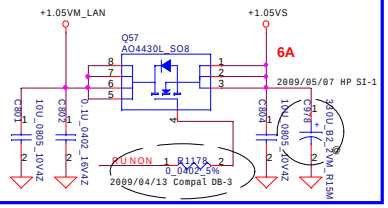

+3VALW to +3VS Transfer

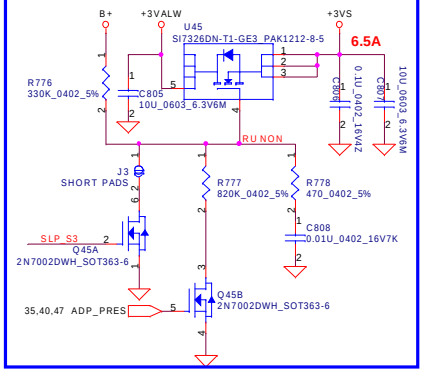

+5VALW to +5VS Transfer

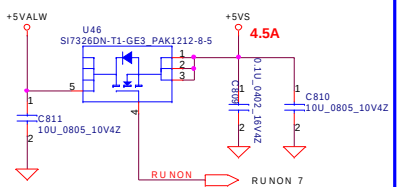

+3VALW to +3VM Transfer

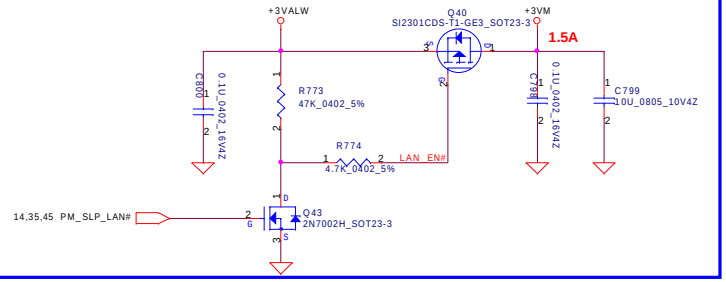

Discharge circuit-2 for V-M

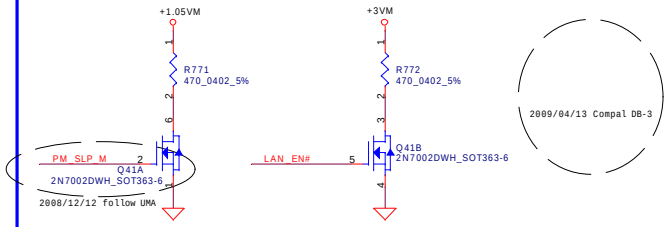

+1.05VM_LAN to +1.05VM Transfer

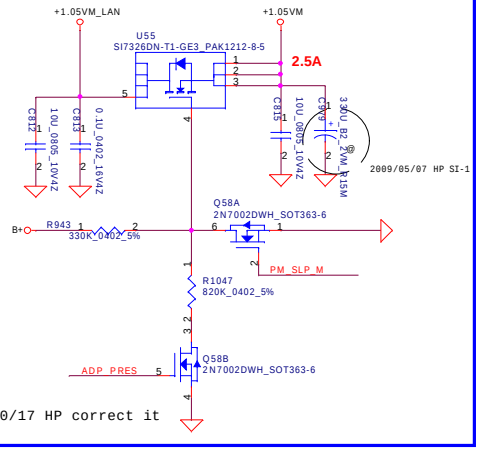

10/17 HP correct it

+1.5V to +1.5VS Transfer

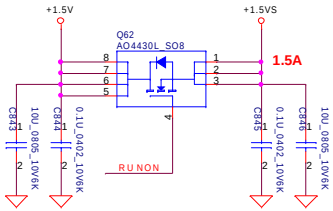

+1.5V to +VDD_MEM Transfer

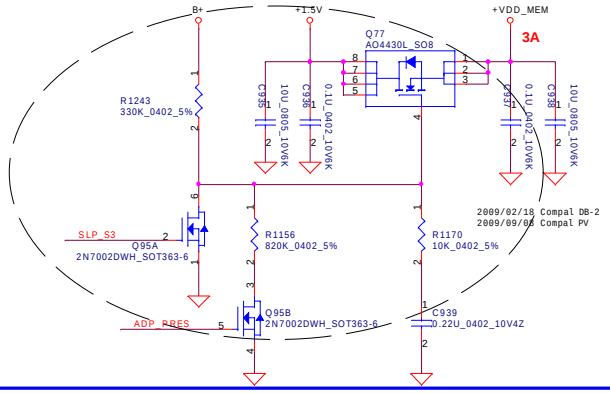

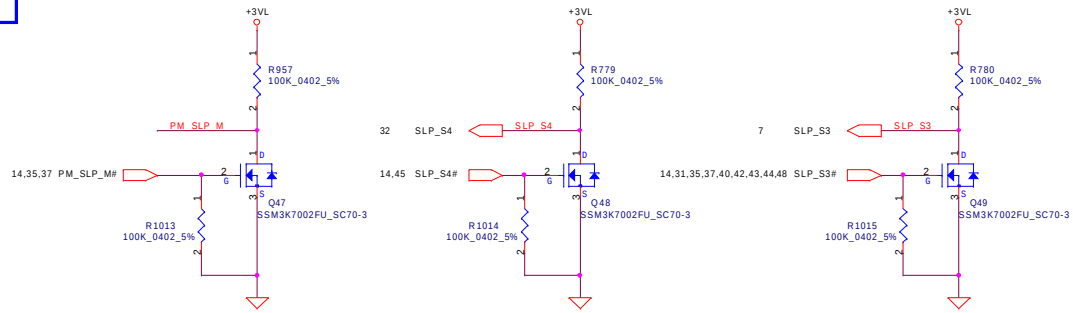

Discharge circuit-1

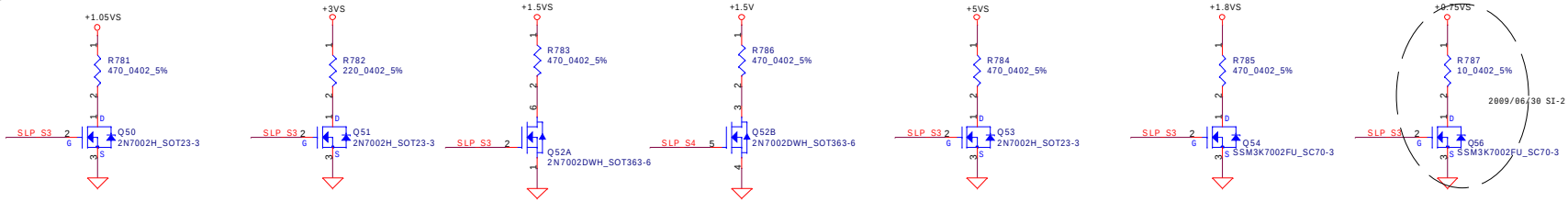

Security Classification	Compal Secret Data		
Issued Date	2008/09/15	Deciphered Date	2009/12/31

THIS SHEET OF ENGINEERING DRAWING IS THE PROPRIETARY PROPERTY OF COMPAL ELECTRONICS, INC. AND CONTAINS CONFIDENTIAL AND TRADE SECRET INFORMATION. THIS SHEET MAY NOT BE TRANSFERED FROM THE CUSTODY OF THE COMPETENT DIVISION OF R&D DEPARTMENT EXCEPT AS AUTHORIZED BY COMPAL ELECTRONICS, INC. NEITHER THIS SHEET NOR THE INFORMATION IT CONTAINS MAY BE USED BY OR DISCLOSED TO ANY THIRD PARTY WITHOUT PRIOR WRITTEN CONSENT OF COMPAL ELECTRONICS, INC.

Compal Electronics, Inc.

Title: **DC/DC Circuits**

Size | Document Number: *LA-4901P* | Rev: 1.0

Date: Tuesday, December 15, 2009 | Sheet 38 of 54

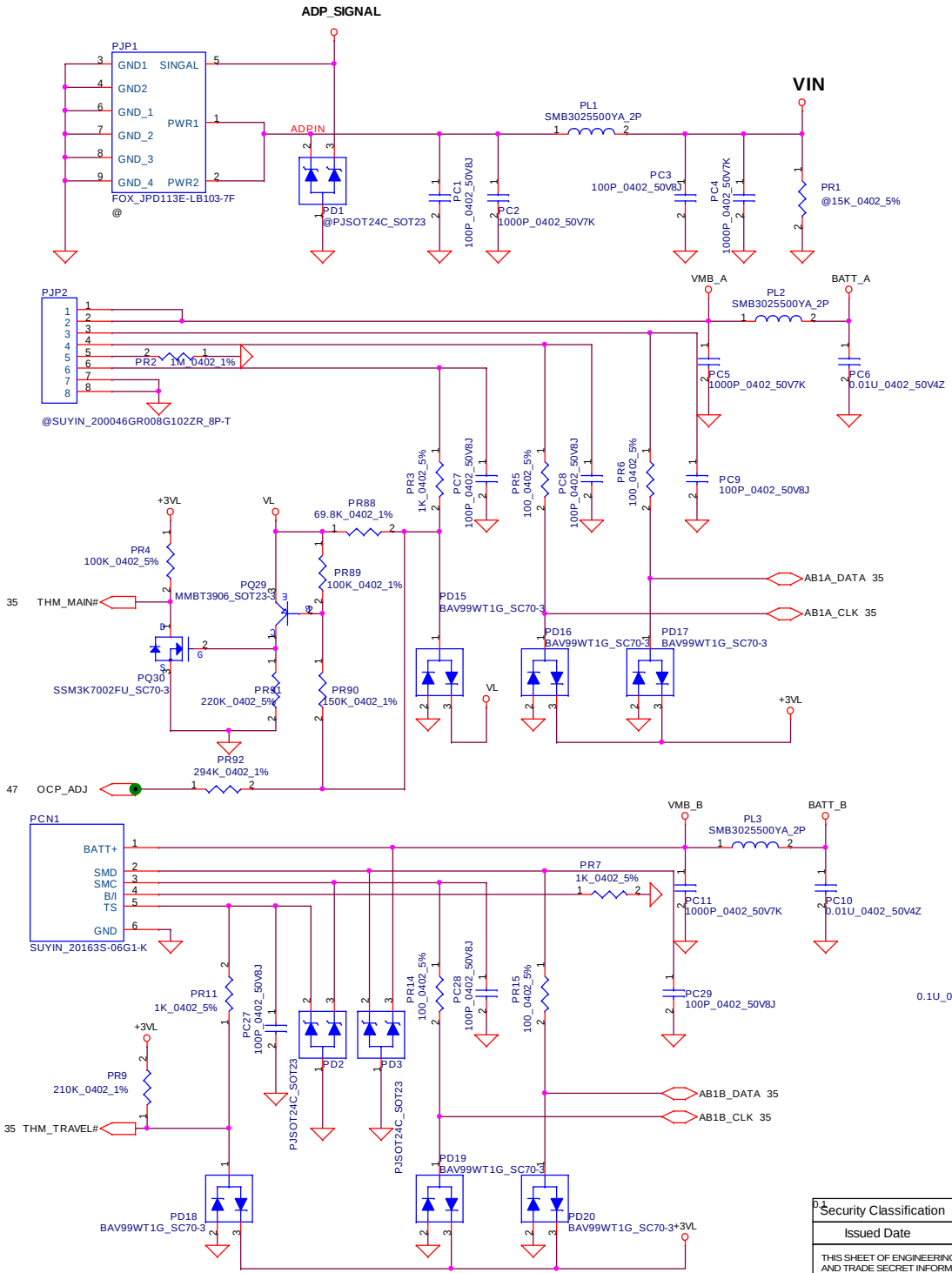

PH1 under CPU botten side :
CPU thermal protection at 90 +-3 degree C
(Need to be checked)

Security Classification	Compal Secret Data		
Issued Date	2008/09/15	Deciphered Date	2009/09/15

THIS SHEET OF ENGINEERING DRAWING IS THE PROPRIETARY PROPERTY OF COMPAL ELECTRONICS, INC. AND CONTAINS CONFIDENTIAL AND TRADE SECRET INFORMATION. THIS SHEET MAY NOT BE TRANSFERED FROM THE CUSTODY OF THE COMPETENT DIVISION OF R&D DEPARTMENT EXCEPT AS AUTHORIZED BY COMPAL ELECTRONICS, INC. NEITHER THIS SHEET NOR THE INFORMATION IT CONTAINS MAY BE USED BY OR DISCLOSED TO ANY THIRD PARTY WITHOUT PRIOR WRITTEN CONSENT OF COMPAL ELECTRONICS, INC.

01

Compal Electronics, Inc.

Title: **DC-IN/ BATTERY CONN**

Size: Custom | Document Number: *LA-4902P* | Rev

Date: Tuesday, December 15, 2009 | Sheet 39 of 54

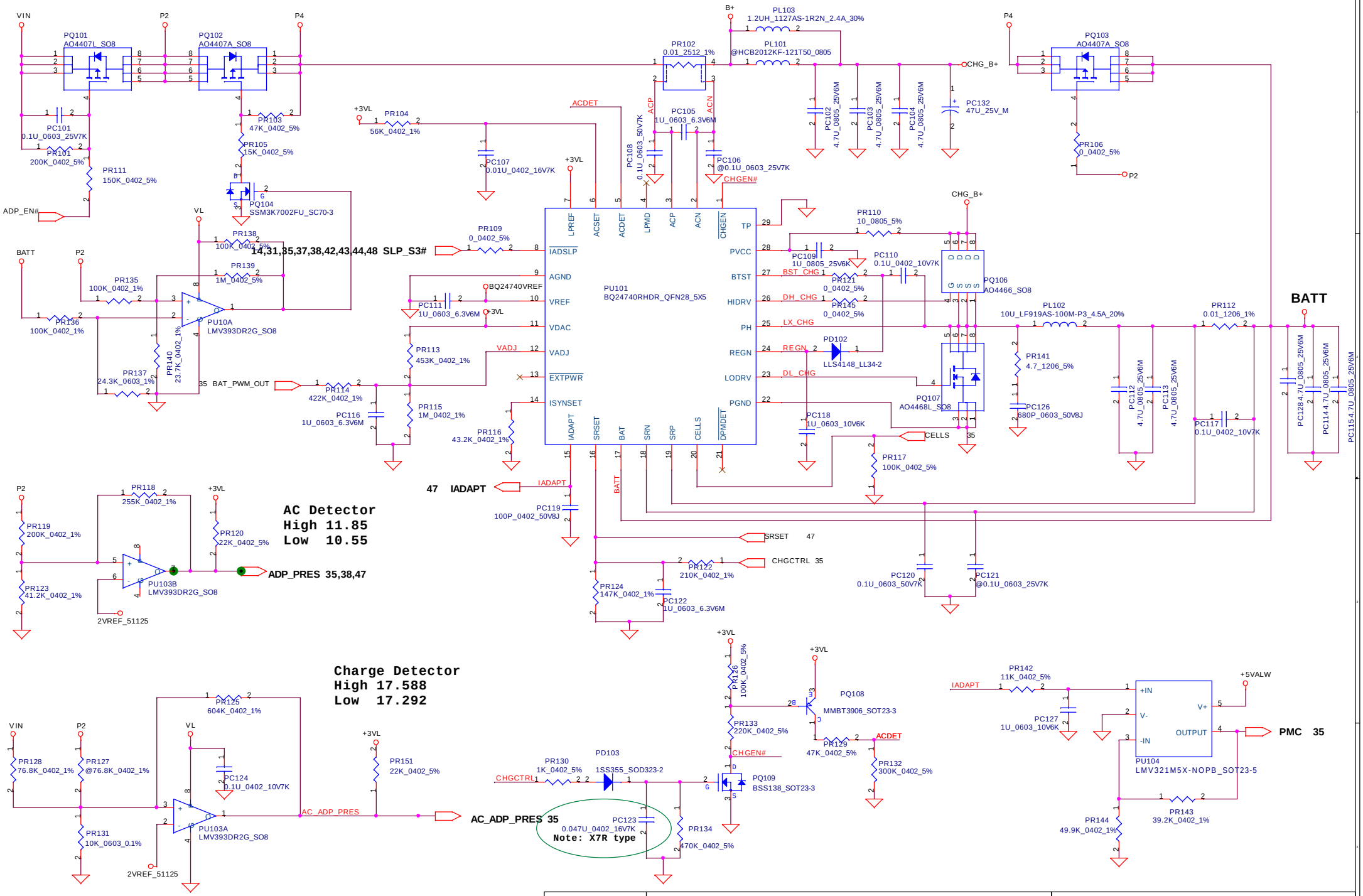

Security Classification	Compal Secret Data		
Issued Date	2008/09/15	Deciphered Date	2009/09/15

THIS SHEET OF ENGINEERING DRAWING IS THE PROPRIETARY PROPERTY OF COMPAL ELECTRONICS, INC. AND CONTAINS CONFIDENTIAL AND TRADE SECRET INFORMATION. THIS SHEET MAY NOT BE TRANSFERED FROM THE CUSTODY OF THE COMPETENT DIVISION OF R&D DEPARTMENT EXCEPT AS AUTHORIZED BY COMPAL ELECTRONICS, INC. NEITHER THIS SHEET NOR THE INFORMATION IT CONTAINS MAY BE USED BY OR DISCLOSED TO ANY THIRD PARTY WITHOUT PRIOR WRITTEN CONSENT OF COMPAL ELECTRONICS, INC.

Compal Electronics, Inc.

Title: **Charger**

Size: | Document Number: **LA-4902P** | Rev: 0.1

Date: Tuesday, December 15, 2009 | Sheet 40 of 54

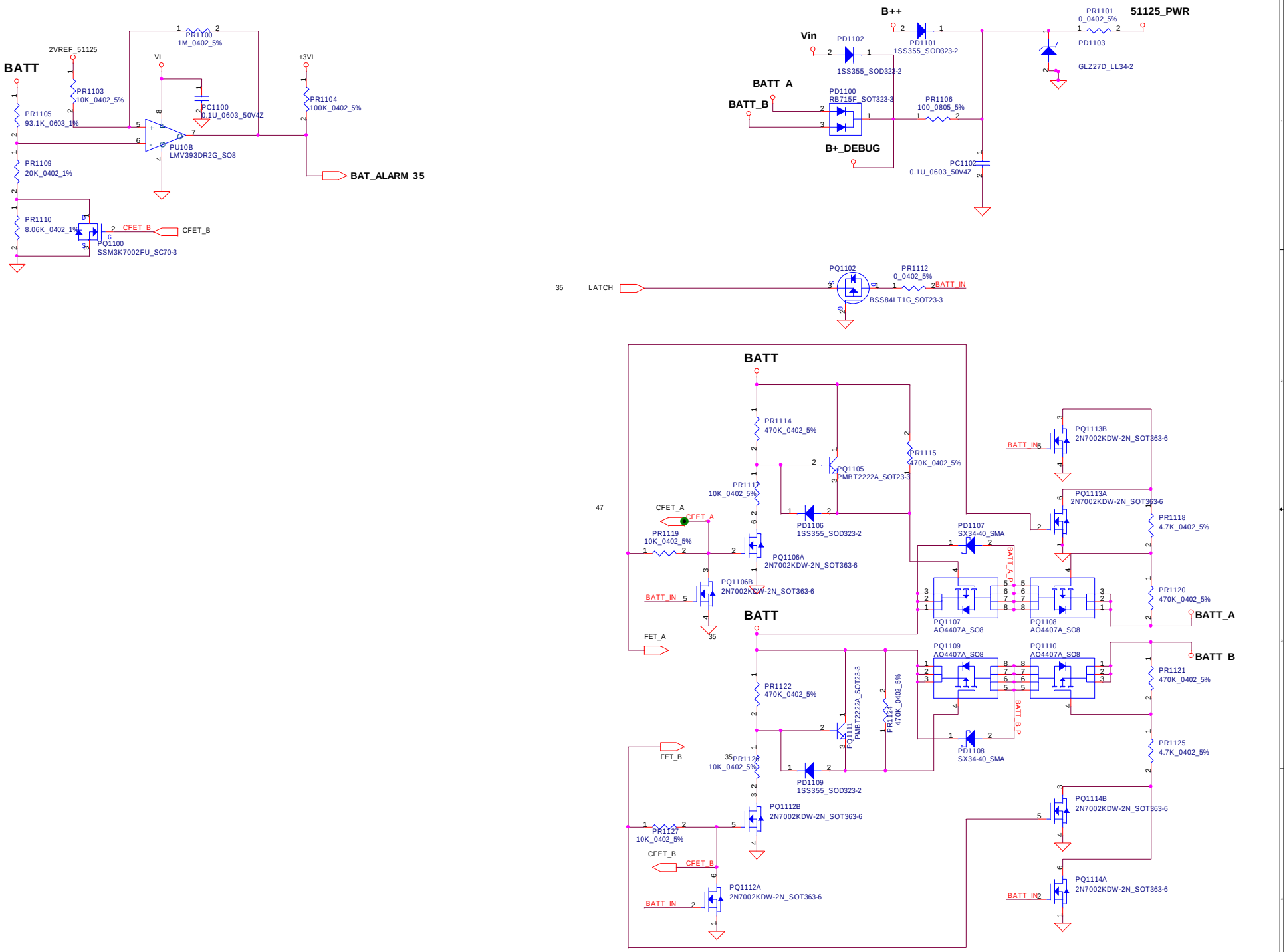

Security Classification	Compal Secret Data		
Issued Date	2008/09/15	Deciphered Date	2009/09/15

THIS SHEET OF ENGINEERING DRAWING IS THE PROPRIETARY PROPERTY OF COMPAL ELECTRONICS, INC. AND CONTAINS CONFIDENTIAL AND TRADE SECRET INFORMATION. THIS SHEET MAY NOT BE TRANSFERED FROM THE CUSTODY OF THE COMPETENT DIVISION OF R&D DEPARTMENT EXCEPT AS AUTHORIZED BY COMPAL ELECTRONICS, INC. NEITHER THIS SHEET NOR THE INFORMATION IT CONTAINS MAY BE USED BY OR DISCLOSED TO ANY THIRD PARTY WITHOUT PRIOR WRITTEN CONSENT OF COMPAL ELECTRONICS, INC.

Compal Electronics, Inc.

Title: **Battery selector**

Size: Custom | Document Number: LA-4902P | Rev

Date: Tuesday, December 15, 2009 | Sheet 41 of 54

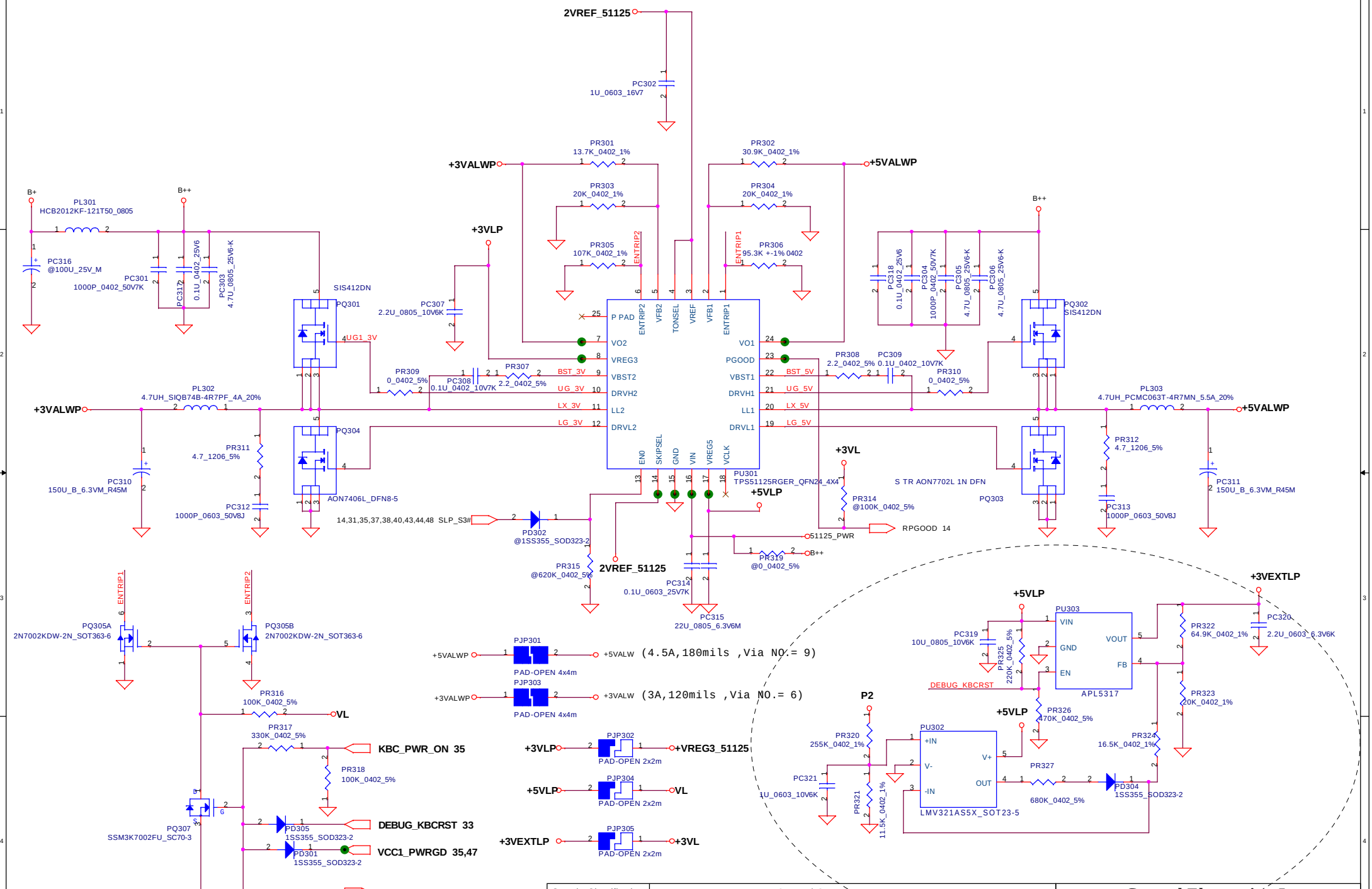

Security Classification	Compal Secret Data		
Issued Date	2008/09/15	Deciphered Date	2009/09/15

THIS SHEET OF ENGINEERING DRAWING IS THE PROPRIETARY PROPERTY OF COMPAL ELECTRONICS, INC. AND CONTAINS CONFIDENTIAL AND TRADE SECRET INFORMATION. THIS SHEET MAY NOT BE TRANSFERED FROM THE CUSTODY OF THE COMPETENT DIVISION OF R&D DEPARTMENT EXCEPT AS AUTHORIZED BY COMPAL ELECTRONICS, INC. NEITHER THIS SHEET NOR THE INFORMATION IT CONTAINS MAY BE USED BY OR DISCLOSED TO ANY THIRD PARTY WITHOUT PRIOR WRITTEN CONSENT OF COMPAL ELECTRONICS, INC.

Compal Electronics, Inc.

Title: **3.3VALWP/5VALWP**

Size: Custom | Document Number: LA-4902P | Rev: 0.1

Date: Tuesday, December 15, 2009 | Sheet 42 of 54

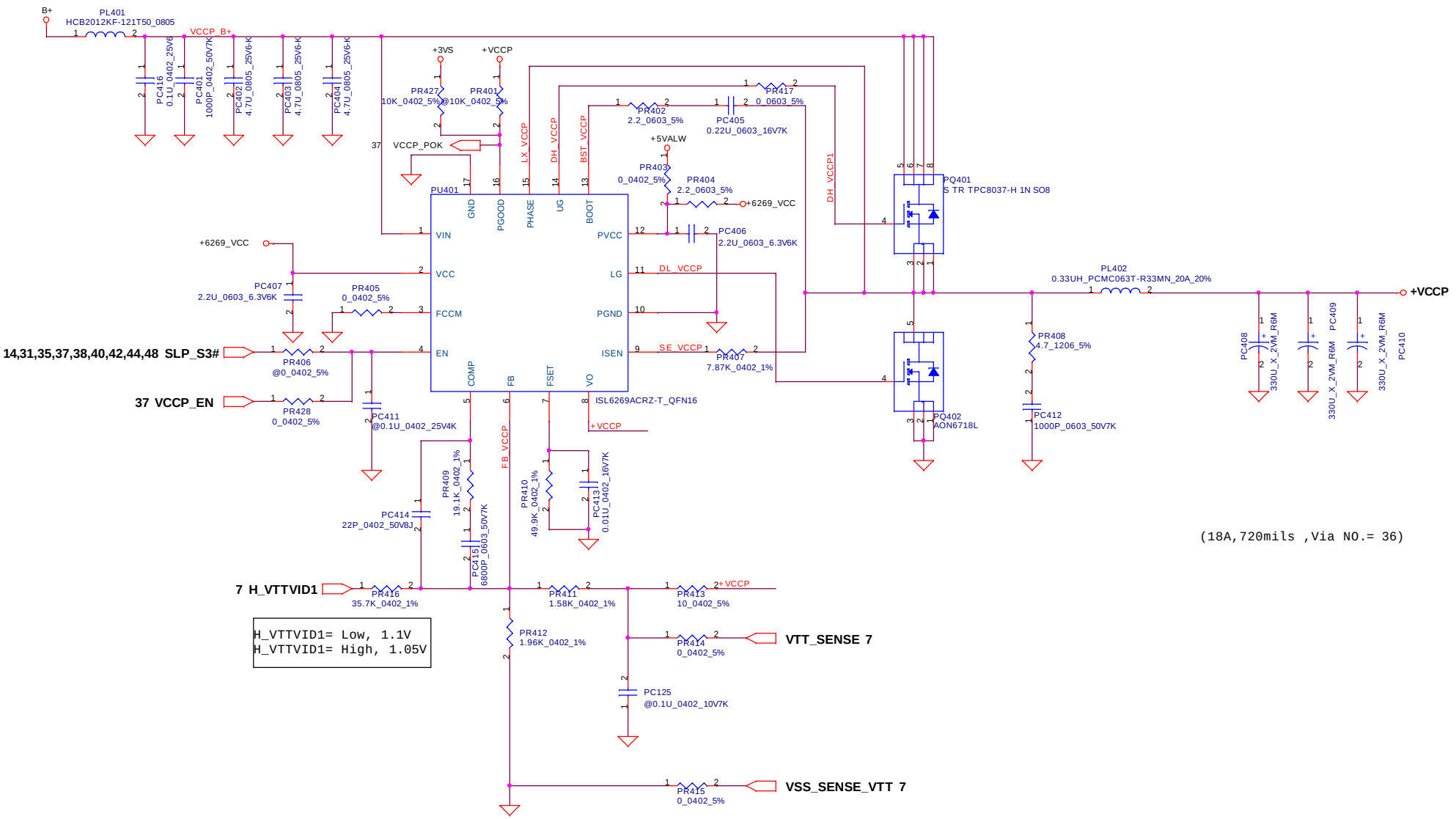

Security Classification	Compal Secret Data		
Issued Date	2008/09/15	Deciphered Date	2009/09/15

THIS SHEET OF ENGINEERING DRAWING IS THE PROPRIETARY PROPERTY OF COMPAL ELECTRONICS, INC. AND CONTAINS CONFIDENTIAL AND TRADE SECRET INFORMATION. THIS SHEET MAY NOT BE TRANSFERED FROM THE CUSTODY OF THE COMPETENT DIVISION OF R&D DEPARTMENT EXCEPT AS AUTHORIZED BY COMPAL ELECTRONICS, INC. NEITHER THIS SHEET NOR THE INFORMATION IT CONTAINS MAY BE USED BY OR DISCLOSED TO ANY THIRD PARTY WITHOUT PRIOR WRITTEN CONSENT OF COMPAL ELECTRONICS, INC.

Compal Electronics, Inc.

Title: **1.05V_VCCP**

Size | Document Number: **LA-4902P** | Rev: 0.1

Date: Tuesday, December 15, 2009 | Sheet 43 of 54

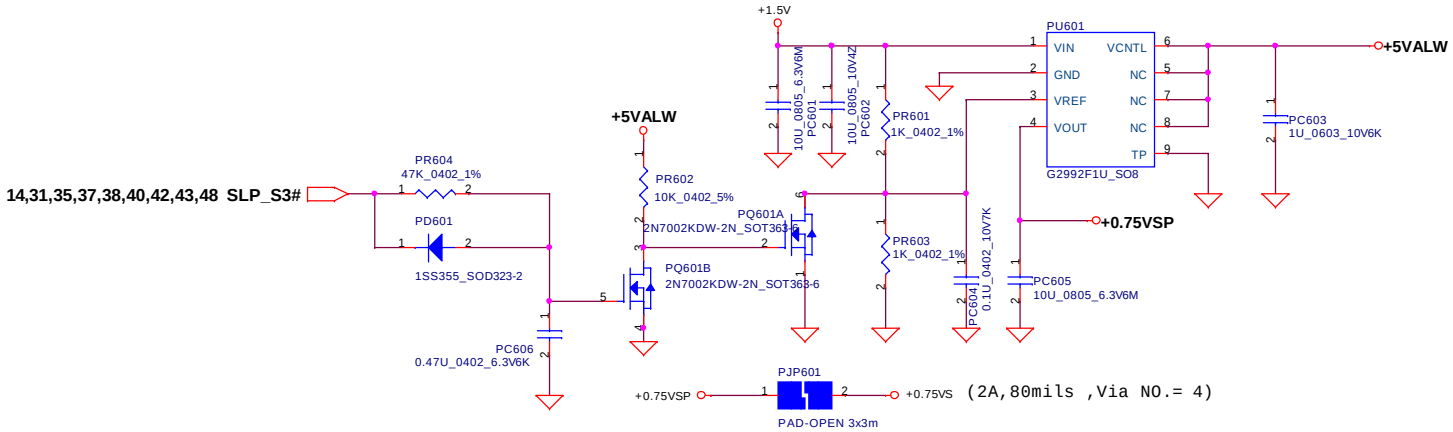

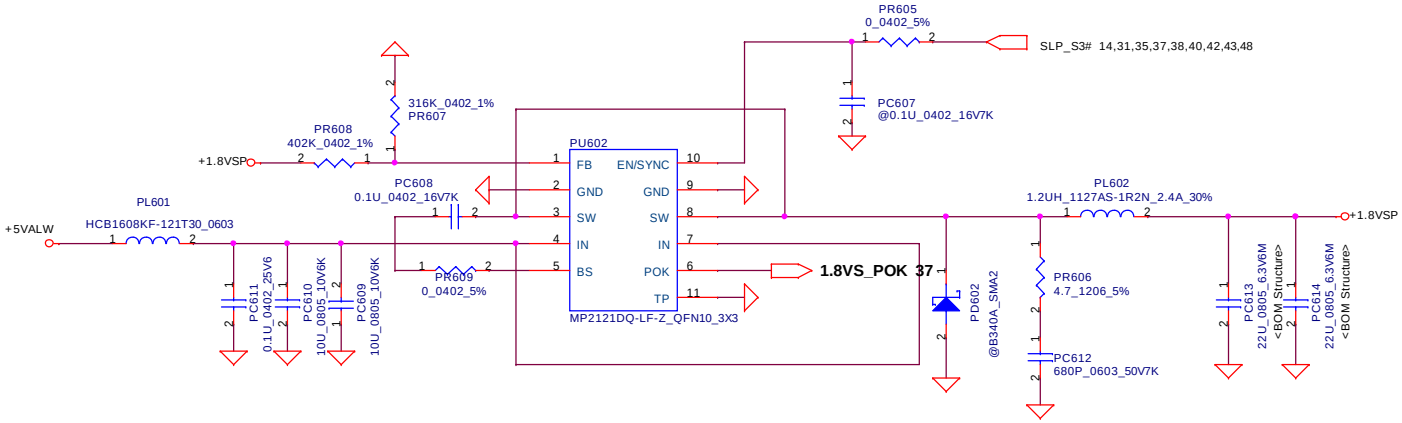

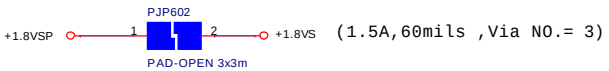

Security Classification	Compal Secret Data		
Issued Date	2008/09/15	Deciphered Date	2009/09/15

THIS SHEET OF ENGINEERING DRAWING IS THE PROPRIETARY PROPERTY OF COMPAL ELECTRONICS, INC. AND CONTAINS CONFIDENTIAL AND TRADE SECRET INFORMATION. THIS SHEET MAY NOT BE TRANSFERED FROM THE CUSTODY OF THE COMPETENT DIVISION OF R&D DEPARTMENT EXCEPT AS AUTHORIZED BY COMPAL ELECTRONICS, INC. NEITHER THIS SHEET NOR THE INFORMATION IT CONTAINS MAY BE USED BY OR DISCLOSED TO ANY THIRD PARTY WITHOUT PRIOR WRITTEN CONSENT OF COMPAL ELECTRONICS, INC.

Compal Electronics, Inc.

Title: **0.75VSP/PCIE/1.8VSP**

Size | Document Number: **LA-4902P** | Rev 0.1

Date: Tuesday, December 15, 2009 | Sheet 44 of 54

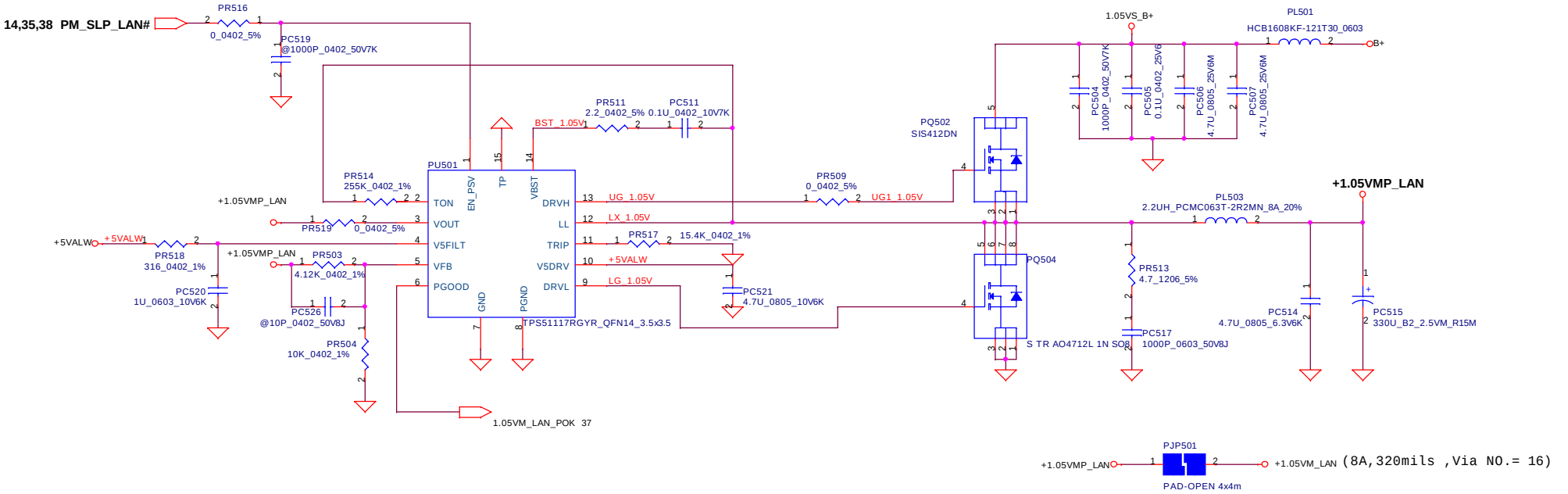

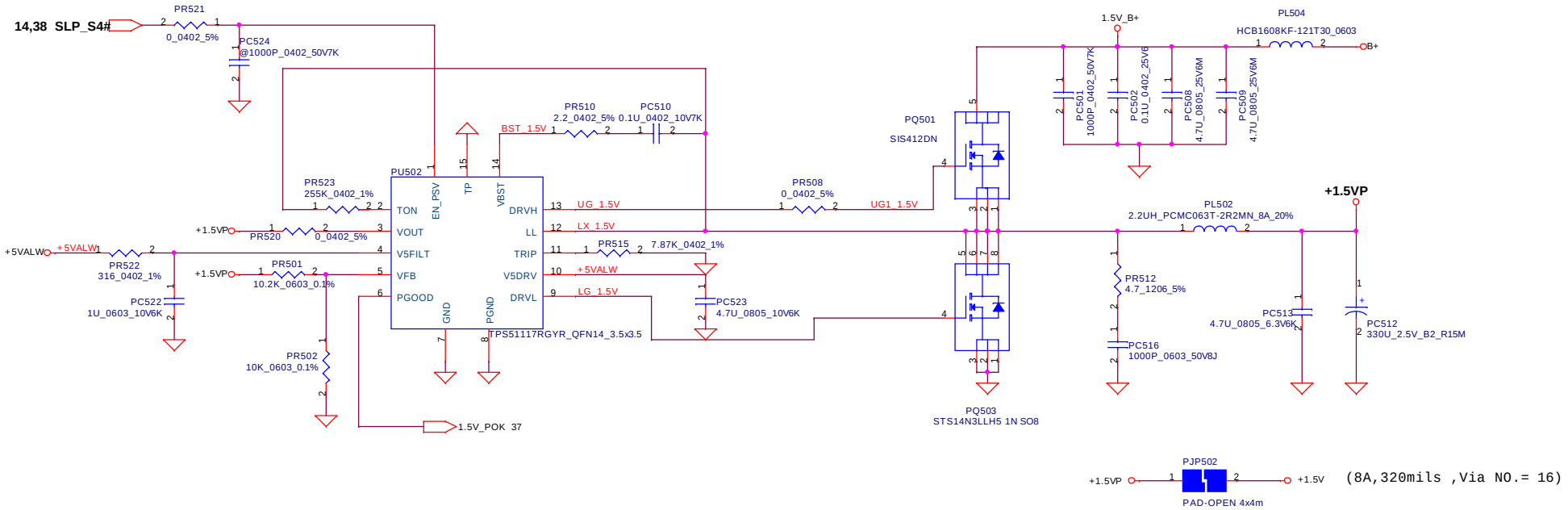

Security Classification	Compal Secret Data		
Issued Date	2008/09/15	Deciphered Date	2009/09/15

THIS SHEET OF ENGINEERING DRAWING IS THE PROPRIETARY PROPERTY OF COMPAL ELECTRONICS, INC. AND CONTAINS CONFIDENTIAL AND TRADE SECRET INFORMATION. THIS SHEET MAY NOT BE TRANSFERED FROM THE CUSTODY OF THE COMPETENT DIVISION OF R&D DEPARTMENT EXCEPT AS AUTHORIZED BY COMPAL ELECTRONICS, INC. NEITHER THIS SHEET NOR THE INFORMATION IT CONTAINS MAY BE USED BY OR DISCLOSED TO ANY THIRD PARTY WITHOUT PRIOR WRITTEN CONSENT OF COMPAL ELECTRONICS, INC.

Compal Electronics, Inc.

Title: **1.5VP/1.05VMP**

Size | Document Number: **LA-4902P** | Rev: 0.1

Date: Tuesday, December 15, 2009 | Sheet 45 of 54

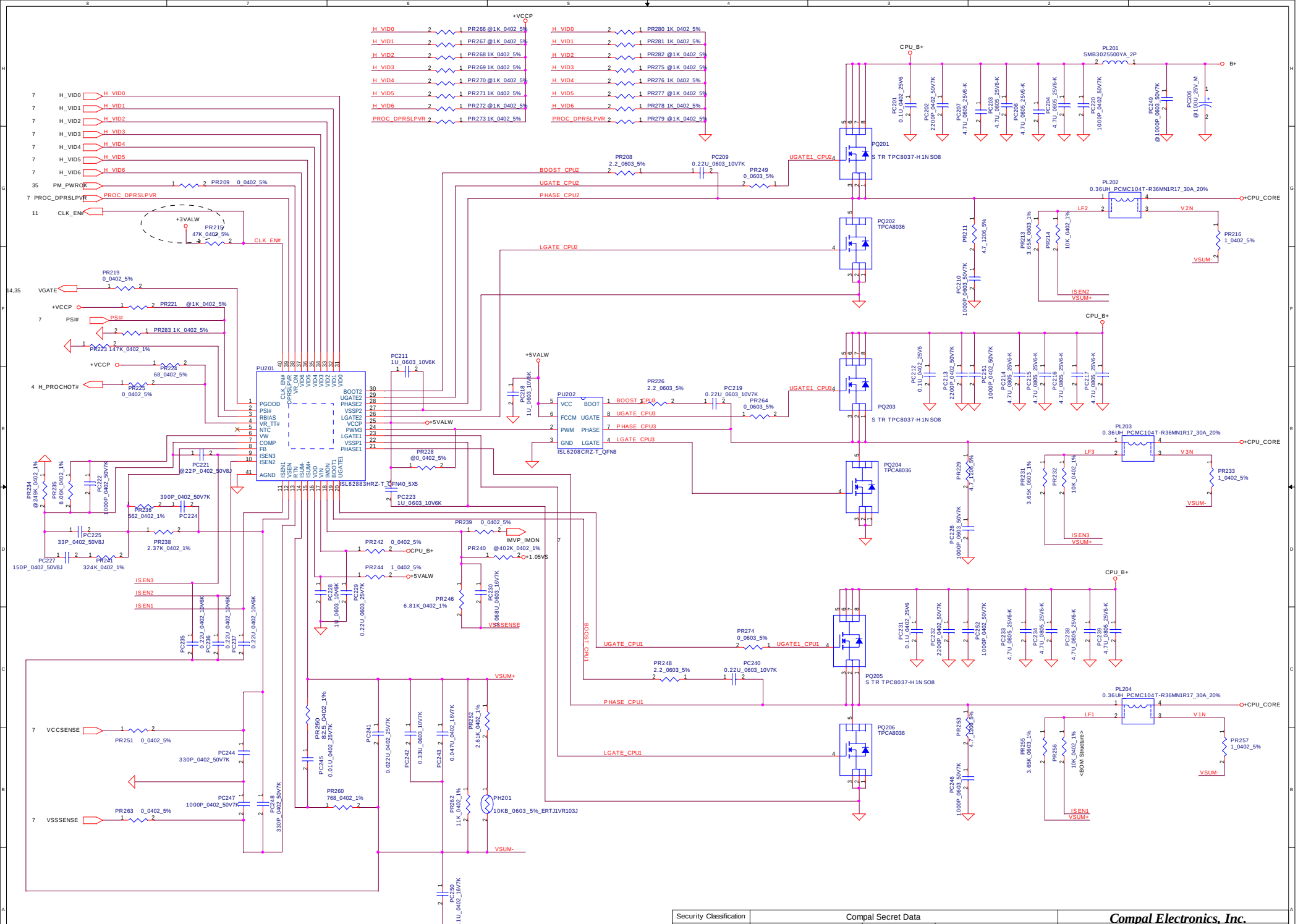

Security Classification	Compal Secret Data		
Issued Date	2008/09/15	Deciphered Date	2009/09/15

THIS SHEET OF ENGINEERING DRAWING IS THE PROPRIETARY PROPERTY OF COMPAL ELECTRONICS, INC. AND CONTAINS CONFIDENTIAL AND TRADE SECRET INFORMATION. THIS SHEET MAY NOT BE TRANSFERED FROM THE CUSTODY OF THE COMPETENT DIVISION OF R&D DEPARTMENT EXCEPT AS AUTHORIZED BY COMPAL ELECTRONICS, INC. NEITHER THIS SHEET NOR THE INFORMATION IT CONTAINS MAY BE USED BY OR DISCLOSED TO ANY THIRD PARTY WITHOUT PRIOR WRITTEN CONSENT OF COMPAL ELECTRONICS, INC.

Compal Electronics, Inc.

Title: **CPU_CORE**

Size	Document Number	Rev
	LA-4891	0.1

Date: Tuesday, December 15, 2009 | Sheet 46 of 54

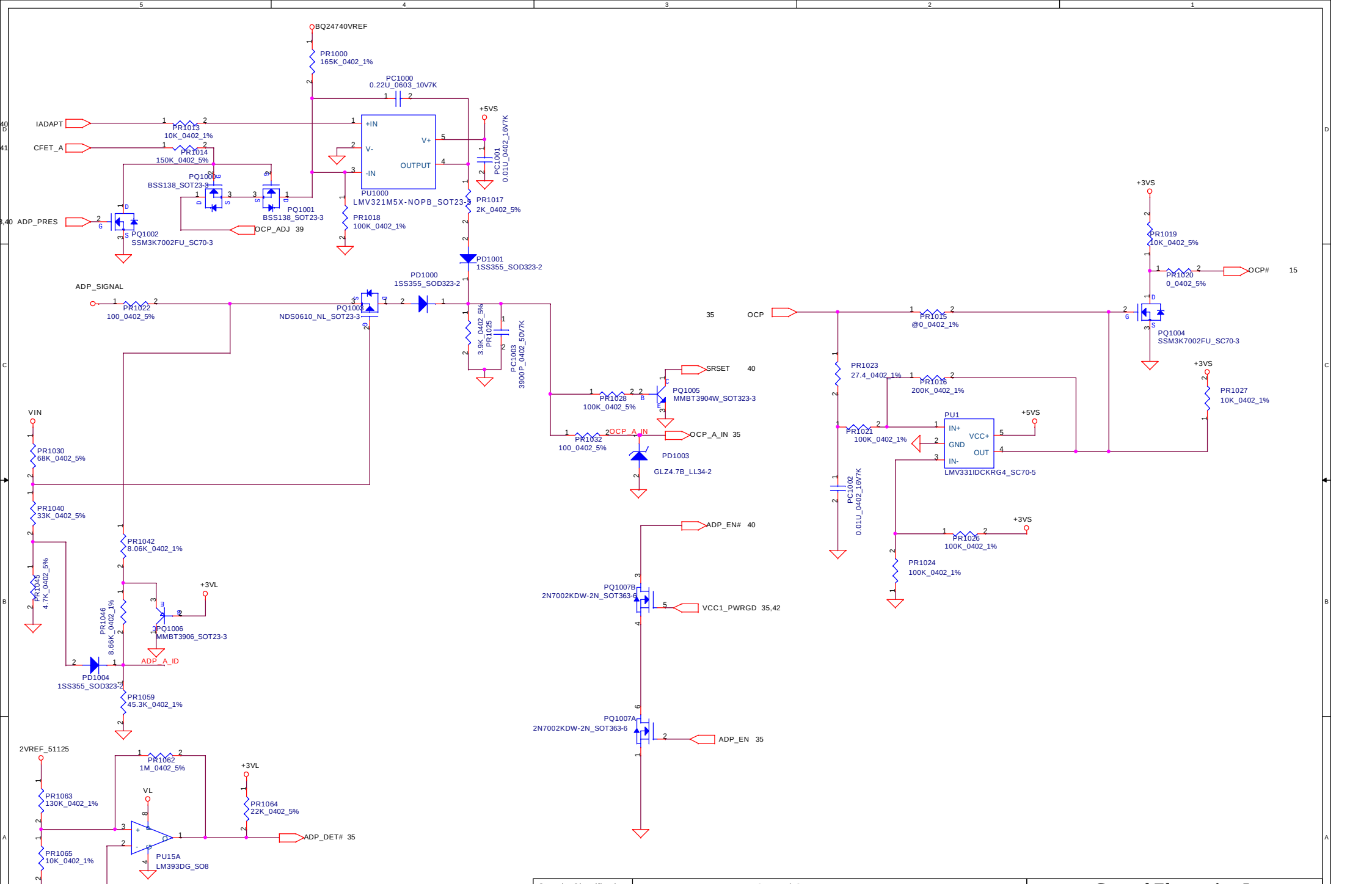

Security Classification	Compal Secret Data		
Issued Date	2008/09/15	Deciphered Date	2009/09/15

THIS SHEET OF ENGINEERING DRAWING IS THE PROPRIETARY PROPERTY OF COMPAL ELECTRONICS, INC. AND CONTAINS CONFIDENTIAL AND TRADE SECRET INFORMATION. THIS SHEET MAY NOT BE TRANSFERED FROM THE CUSTODY OF THE COMPETENT DIVISION OF R&D DEPARTMENT EXCEPT AS AUTHORIZED BY COMPAL ELECTRONICS, INC. NEITHER THIS SHEET NOR THE INFORMATION IT CONTAINS MAY BE USED BY OR DISCLOSED TO ANY THIRD PARTY WITHOUT PRIOR WRITTEN CONSENT OF COMPAL ELECTRONICS, INC.

Compal Electronics, Inc.

Title: **ADP_OCP**

Size: Custom | Document Number: LA-4902P | Rev

Date: Tuesday, December 15, 2009 | Sheet 47 of 54

GPU_VID0	GPU_VID1	GPU_VID2	+NVVDD
0	0	0	0.75V
1	0	0	0.8V
1	1	0	0.85V
1	1	1	1V

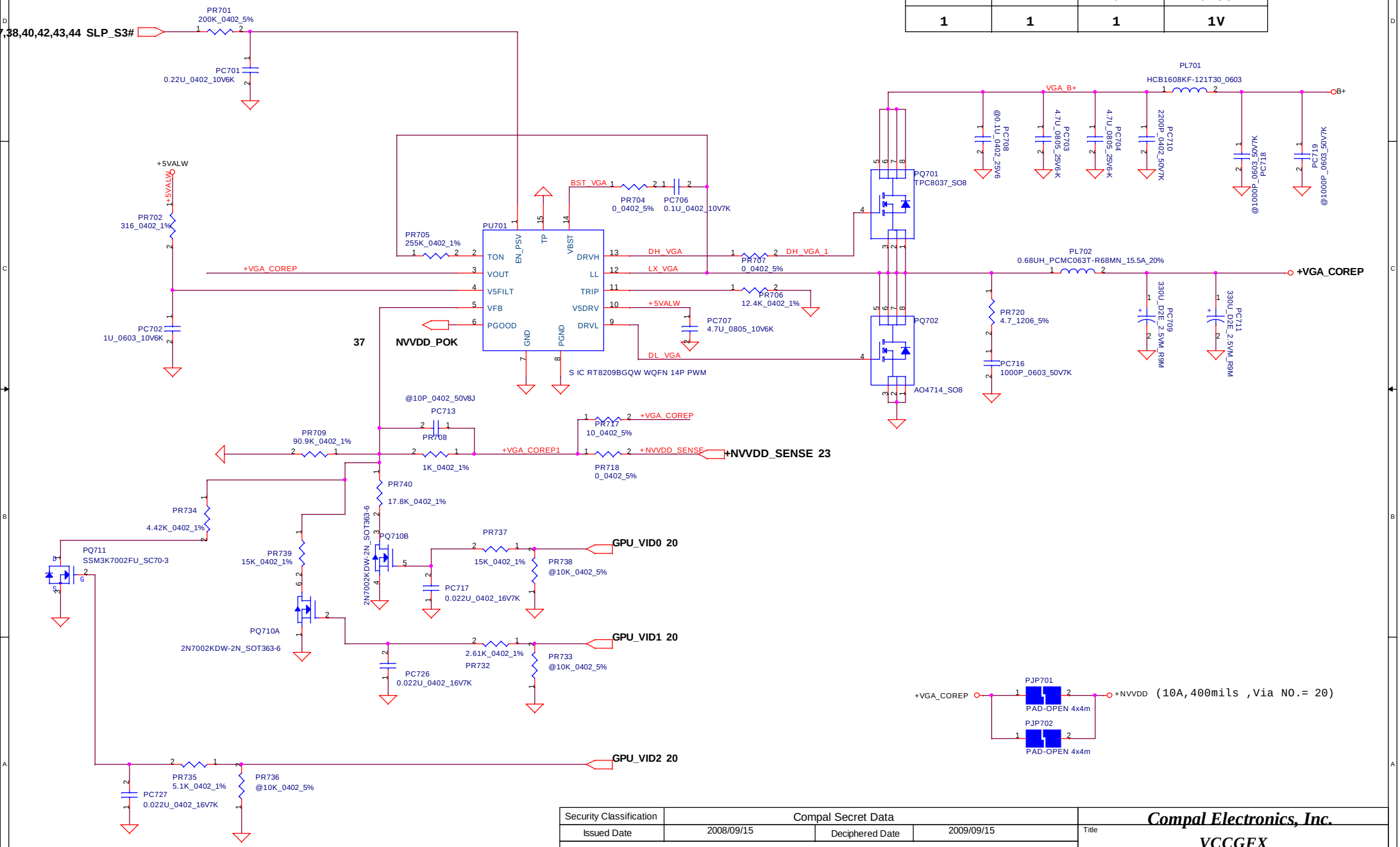

Security Classification	Compal Secret Data		
Issued Date	2008/09/15	Deciphered Date	2009/09/15

THIS SHEET OF ENGINEERING DRAWING IS THE PROPRIETARY PROPERTY OF COMPAL ELECTRONICS, INC. AND CONTAINS CONFIDENTIAL AND TRADE SECRET INFORMATION. THIS SHEET MAY NOT BE TRANSFERED FROM THE CUSTODY OF THE COMPETENT DIVISION OF R&D DEPARTMENT EXCEPT AS AUTHORIZED BY COMPAL ELECTRONICS, INC. NEITHER THIS SHEET NOR THE INFORMATION IT CONTAINS MAY BE USED BY OR DISCLOSED TO ANY THIRD PARTY WITHOUT PRIOR WRITTEN CONSENT OF COMPAL ELECTRONICS, INC.

Compal Electronics, Inc.

Title: VCCGFX

Size: Custom | Document Number: LA-4902P | Rev

Date: Tuesday, December 15, 2009 | Sheet 48 of 54

Item	Reason for change	PG#	Modify List	Date	Phase
1					
2					
3					
4					
5					
6					
7					

THIS SHEET OF ENGINEERING DRAWING IS THE PROPRIETARY PROPERTY OF COMPAL ELECTRONICS, INC. AND CONTAINS CONFIDENTIAL AND TRADE SECRET INFORMATION. THIS SHEET MAY NOT BE TRANSFERED FROM THE CUSTODY OF THE COMPETENT DIVISION OF R&D DEPARTMENT EXCEPT AS AUTHORIZED BY COMPAL ELECTRONICS, INC. NEITHER THIS SHEET NOR THE INFORMATION IT CONTAINS MAY BE USED BY OR DISCLOSED TO ANY THIRD PARTY WITHOUT PRIOR WRITTEN CONSENT OF COMPAL ELECTRONICS, INC.

Version Change List (P. I. R. List) for HW Circuit DB-1>> DB-2

Item	Page #	Date	Request Owner	Solution Description	Rev.
1	01	2009/02/06	HP	Del R4, R6, R8 for XDP.	0.2
2	01	2009/02/06	HP	Del R40 for Thermal sensor.	0.2
3	01	2009/02/06	HP	Del R34, R36, R46, R49, R37 for XDP.	0.2
4	01	2009/02/24	HP	Change R31 24.9K ohm to 1.5K ohm and R33 12.4K ohm to 750 ohm for intel WOW.	0.2
5	01	2009/02/25	HP	Debug port design guide changed XDP debug ports to CFG4 - pin 28, CFG5 - pin 30, CFG10 - pin 22, and CFG11 pin 24.	0.2
6	02	2009/02/19	HP	No install R60, R61.	0.2
7	12	2009/02/25	Compal	Install C193, C194 for WLAN nosie	0.2
8	12	2009/02/06	HP	Change R1026, R181, R185, R1027 from 15 ohm to 0 ohm.	0.2
9	12	2009/02/06	HP	Del C205, C207, C208, C209 for docking.	0.2
10	12	2009/02/06	HP	Change D1pin 2 form +3VL to +VREG3_51125	0.2
11	12	2009/02/06	HP	Del JP15 pin 51, 53 trace (SMB_DATA_S3, SMB_CLK_S3) and add test point.	0.2
12	12	2009/02/11	HP	Add R1144 1K ohm	0.2
13	12	2009/02/11	HP	Add Test point for SATA bus.	0.2
14	12	2009/02/18	HP	Add NAND Flash dect pin (BRAID_DET)	0.2
15	13	2009/02/06	HP	Install R354	0.2
16	13	2009/02/06	HP	Add R1138 10K ohm	0.2
17	13	2009/02/20	HP	Change R1092, R1093 power sourece form +3VS to +3VS.	0.2
18	13	2009/02/20	HP	Del R208, R210	0.2
19	13	2009/02/22	HP	Add Q76A and Q76B for CBB	0.2
20	13	2009/02/22	HP	Reserve R1146 and R1147 for external VGA thermal	0.2
21	14	2009/01/22	HP	Del R238, because double pull down.	0.2
22	14	2009/02/19	HP	Del R288	0.2
23	14	2009/02/06	HP	Stuff R296	0.2
24	14	2009/02/06	HP	Add R1142 10K ohm	0.2
25	14	2009/02/25	Compal	Add C949 for RF	0.2
26	16	2009/01/22	HP	Del L1, C228, C229 and add test point.	0.2
27	16	2009/01/22	HP	Del L2, C241 and add test point.	0.2
28	16	2009/01/22	HP	Del C847 and add test point.	0.2
29	16	2009/01/22	HP	Del L4, C269 and add test point.	0.2
30	16	2009/01/22	HP	Del L3, C263, C262 and add test point.	0.2
31	16	2009/02/03	HP	Change R299, R300 form 10 ohm to 100ohm.	0.2
32	16	2009/02/03	HP	Change C278 form 0.1uF to 1uF.	0.2
33	16	2009/02/05	HP	Change C243, C244 form 10uF to 22uF.	0.2
34	18	2009/02/18	Compal	Add L48, L49, L50, C944, C943, C942 for EMI	0.2
35	18	2009/02/24	Nvidia	Change R321, R320, R319, R318 form 2.2K ohm to 4.7K ohm.	0.2
36	18	2009/02/18	Compal	Reserve D5, D6, D7, D8, D9 for ESD	0.2
37	18	2009/02/12	Nvidia	Del R1066	0.2
38	19	2009/01/22	HP	Add Q71, Q72, R1134 for Keyboard light	0.2

Security Classification	Compal Secret Data		
Issued Date	2006/02/13	Deciphered Date	2006/03/10

THIS SHEET OF ENGINEERING DRAWING IS THE PROPRIETARY PROPERTY OF COMPAL ELECTRONICS, INC. AND CONTAINS CONFIDENTIAL AND TRADE SECRET INFORMATION. THIS SHEET MAY NOT BE TRANSFERED FROM THE CUSTODY OF THE COMPETENT DIVISION OF R&D DEPARTMENT EXCEPT AS AUTHORIZED BY COMPAL ELECTRONICS, INC. NEITHER THIS SHEET NOR THE INFORMATION IT CONTAINS MAY BE USED BY OR DISCLOSED TO ANY THIRD PARTY WITHOUT PRIOR WRITTEN CONSENT OF COMPAL ELECTRONICS, INC.

Compal Electronics, Inc.

Title: Hardware revision (0.1 to 0.2)

Size: Custom | Document Number: LA-4901P | Rev: 1.0

Date: Tuesday, December 15, 2009 | Sheet 50 of 54

Version Change List (P. I. R. List) for HW Circuit DB-1>> DB-2

Item	Page #	Date	Request Owner	Solution Description	Rev.
39	19	2009/02/06	Nvidia	Add C914, C915, C916, C917 for eDP.	0.2
40	19	2009/02/06	HP	Change R341 pin 1 power plan form +5VS to +3VALW.	0.2
41	20	2009/02/12	Nvidia	Reserve R1150	0.2
42	20	2009/02/24	HP	Change R355, R356 from 2K ohm to 10K ohm.	0.2
43	20	2009/02/25	HP	Add Q78, R1158, R1157 for thermal trip.	0.2
44	21	2009/01/20	HP	Del LVDS function	0.2
45	21	2009/02/26	Nvidia	Del C346, because no SPDIF.	0.2
46	22	2009/01/20	Nvidia	Add C924 ~ C931 for DP function	0.2
47	22	2009/02/06	Nvidia	Del RP28, 31, 34, 40, 49, 52, 55, 29, 43, 35, 39, 44, 48, 53, 56, 30, 33, 36, 38, 45, 46, 42 for VRAM	0.2
48	22	2009/02/06	Nvidia	Del C904, 899, 900, 901, 902, 903 for VRAM	0.2
49	23	2009/02/23	Nvidia	Add L47, C941 for SP_PLLVDD	0.2
50	26	2009/02/19	HP	Del C505, C509, C507, C508, C905, Q18, R440, R1062, R441	0.2
51	26	2009/02/06	HP	Add C934	0.2
52	27	2009/02/18	HP	ReserveD57 for ESD	0.2
53	28	2009/02/06	HP	Recover Q25, R503, R483	0.2
54	29	2009/02/26	HP	Add R1159 for NAND Flash detect	0.2
55	30	2009/02/24	Compal	Del R529, R528, R535, C618, U22	0.2
56	30	2009/02/24	Compal	Add Q79 ~ Q83, R1163, R1162, R1164, C945, C946, C947, C948	0.2
57	31	2009/02/22	Compal	Del D30, U28, C711, R608	0.2
58	32	2009/02/18	HP	Reserve D33, D34, D36, D68 for ESD	0.2
59	33	2009/02/18	Compal	Reserve D32 for ESD	0.2
60	34	2009/02/06	HP	Add JP32 of pin 179, 178, 11, 10 to +5VS	0.2
61	34	2009/01/22	HP	Del C746 ~ C761	0.2
62	34	2009/02/06	HP	Add Q75, R1145.	0.2
63	34	2009/02/06	HP	Del R647~ R650	0.2
64	35	2009/02/06	HP	Reserve R711	0.2
65	35	2009/02/06	HP	Add R1140	0.2
66	35	2009/02/16	HP	Change R692 from 10K ohm to 220 ohm	0.2
67	35	2009/01/22	HP	Del L4, C269 and add test point.	0.2
68	36	2009/02/18	Compal	change Super IO from ITE to SMSC	0.2
69	37	2009/02/25	HP	Del R758	0.2
70	37	2009/02/06	HP	Change R941 pin from PM_SLP_LAN# to PM_SLP_M#	0.2
71	37	2009/02/25	HP	change R1044 from 49.9K ohm to 78.7K ohm.	0.2
72	38	2009/02/18	Compal	Add Q77, R1170, C939, R1156, C935 ~ C938	0.2
73					0.2
74					0.2
75					0.2
76					0.2

THIS SHEET OF ENGINEERING DRAWING IS THE PROPRIETARY PROPERTY OF COMPAL ELECTRONICS, INC. AND CONTAINS CONFIDENTIAL AND TRADE SECRET INFORMATION. THIS SHEET MAY NOT BE TRANSFERED FROM THE CUSTODY OF THE COMPETENT DIVISION OF R&D DEPARTMENT EXCEPT AS AUTHORIZED BY COMPAL ELECTRONICS, INC. NEITHER THIS SHEET NOR THE INFORMATION IT CONTAINS MAY BE USED BY OR DISCLOSED TO ANY THIRD PARTY WITHOUT PRIOR WRITTEN CONSENT OF COMPAL ELECTRONICS, INC.

Version Change List (P. I. R. List) for HW Circuit DB-2>> DB-3

Item	Page #	Date	Request Owner	Solution Description	Rev.
01	15	2009/03/23	Compal	Add RP59	0.3
02	15	2009/03/23	Compal	Reserve C956 ~ C951 for RF	0.3
03	30	2009/03/08	Compal	Add R1173 for RF	0.3
04	36	2009/03/23	Compal	Add R1174 10K ohm	0.3
05	36	2009/03/23	Nvidia	Change R1059 from 40.2 ohm to 60.4 ohm	0.3
06	36	2009/03/23	Nvidia	Change R418 from 60.4 ohm to 40.2 ohm	0.3
07	36	2009/04/09	Compal	Install R706 for SMSC CBB	0.3
08	23	2009/04/09	Nvidia	Del L16, C429 ~ C432 for no use LVDS function	0.3
09	23	2009/04/09	Nvidia	Del L17, C433 ~ C435, C436, C437, C883 for no use LVDS function	0.3
10	23	2009/04/09	Nvidia	Add R1175 ~ R1177 for no use LVDS function	0.3
11	18	2009/04/09	HP	Add C957 for DP issue	0.3
12	01	2009/04/13	Compal	Del R12 for follow UMA	0.3
13	38	2009/04/13	Compal	Del Q70, R1094 for follow UMA	0.3
14	35	2009/04/13	Compal	Reserve R1140	0.3
15	31	2009/04/13	Compal	Add R1179 for follow UMA	0.3
16	16	2009/04/13	Compal	Del R290, R291 for follow UMA	0.3
17	15	2009/04/13	Compal	Change C956 ~ C951 from 47P to 22P for RF	0.3
18	04	2009/04/10	HP	Install R51	0.3
19	27	2009/04/10	HP	No install R1083	0.3
20	33	2009/04/10	HP	Reserve R1180	0.3
21	15	2009/04/10	HP	LAN_DIS# should pull up to +3VM_LAN instead of 3VALW	0.3
22	04	2009/04/10	HP	Change R14/R15 to 1.1K1%/3K1% per DG1.52	0.3
23	20	2009/04/10	HP	Install R1085 and R1086 for SM communication to GPU	0.3
24	15	2009/04/10	HP	Reserve R1181	0.3
25	19	2009/04/10	HP	Reserve R331	0.3
26	19	2009/04/10	HP	Del R484	0.3
27	09	2009/04/10	HP	Del M2	0.3
28	10	2009/04/10	HP	Del M2	0.3
29	38	2009/04/13	Compal	Add R1178	0.3
30	13	2009/04/10	HP	XTAL_IN (ohm to GND if not used)For discrete:NO INSTALL: R215, Y4, C226, INSTALL 0ohm resistor in C227	0.3
31	35	2009/04/14	Compal	Install R1035, R1036, R1037; no install R1034.	0.3
					0.3

Security Classification	Compal Secret Data		
Issued Date	2006/02/13	Deciphered Date	2006/03/10

THIS SHEET OF ENGINEERING DRAWING IS THE PROPRIETARY PROPERTY OF COMPAL ELECTRONICS, INC. AND CONTAINS CONFIDENTIAL AND TRADE SECRET INFORMATION. THIS SHEET MAY NOT BE TRANSFERED FROM THE CUSTODY OF THE COMPETENT DIVISION OF R&D DEPARTMENT EXCEPT AS AUTHORIZED BY COMPAL ELECTRONICS, INC. NEITHER THIS SHEET NOR THE INFORMATION IT CONTAINS MAY BE USED BY OR DISCLOSED TO ANY THIRD PARTY WITHOUT PRIOR WRITTEN CONSENT OF COMPAL ELECTRONICS, INC.

Compal Electronics, Inc.

Title: Hardware revision (0.2 to 0.3)

Size: Custom | Document Number: LA-4901P | Rev: 1.0

Date: Tuesday, December 15, 2009 | Sheet 52 of 54

Version Change List (P. I. R. List) for HW Circuit DB-3>> SI-1

Item	Page #	Date	Request Owner	Solution Description	Rev.
01	16	2009/04/24	HP	Del R294	0.4
02	13	2009/04/24	HP	Del CLRP2	0.4
03	14	2009/04/24	HP	Del C147, C148 location	0.4
04	14	2009/04/24	HP	Add C961	0.4
05	14	2009/04/24	HP	Add R1188, R1187 for intel spec	0.4
06	27	2009/04/24	HP	Add C962 ~ C965	0.4
07	36	2009/04/24	HP	Add R1190, R1189	0.4
08	29	2009/04/24	HP	Del C574~C577 and C579~C582.	0.4
09	33	2009/04/24	HP	Add R1191, R1192	0.4
10	26	2009/05/02	HP	Add R1198, R1199	0.4
11	04	2009/05/02	HP	Install R1060	0.4
12	35	2009/05/02	HP	Add R1197, C967, C966, C968, R1195, R1196	0.4
13	38	2009/05/02	HP	Add C978, C979	0.4

Version Change List (P. I. R. List) for HW Circuit SI-1>> SI-1b

Item	Page #	Date	Request Owner	Solution Description	Rev.
01	04	2009/07/21	HP	Add C997, R1219, Q87, R1218 for CPU S3 power savings issue	0.5
02	04	2009/07/02	HP	Add R1226 for CPU S3 power savings issue	0.5
03	05	2009/07/21	HP	Add Q88, Q89 and reserve R1220, R1222 for CPU S3 power savings issue	0.5
04	07	2009/07/02	HP	Add Q91, R1224, C994, C995, C991, C992, C993, C996, Q92, R1223 for CPU S3 power savings issue	0.5
05	19	2009/06/30	HP	Add R1213, D72 for Lid SW issue	0.5
06	37	2009/07/09	HP	Change C864 from 0.047uF to 0.068uF.	0.5
					0.5

THIS SHEET OF ENGINEERING DRAWING IS THE PROPRIETARY PROPERTY OF COMPAL ELECTRONICS, INC. AND CONTAINS CONFIDENTIAL AND TRADE SECRET INFORMATION. THIS SHEET MAY NOT BE TRANSFERED FROM THE CUSTODY OF THE COMPETENT DIVISION OF R&D DEPARTMENT EXCEPT AS AUTHORIZED BY COMPAL ELECTRONICS, INC. NEITHER THIS SHEET NOR THE INFORMATION IT CONTAINS MAY BE USED BY OR DISCLOSED TO ANY THIRD PARTY WITHOUT PRIOR WRITTEN CONSENT OF COMPAL ELECTRONICS, INC.

Version Change List (P. I. R. List) for HW Circuit SI-1b>> SI-2

Item	Page #	Date	Request Owner	Solution Description	Rev.
01	07	2009/07/22	HP	Change C72 ~ C75 from 10uF to 20uF	0.6
02	11	2009/06/30	Compal	Reserve R1215 for CLK gen change	0.6
03	15	2009/07/23	Compal	Add C949 ~ C951 for Compal RF team.	0.6
04	12	2009/09/03	Compal	Change JBAT1 Connector.	0.6
05	32	2009/09/03	Compal	Reserve Q	0.6
06					0.6
07					0.6
08					0.6
09					0.6
10					0.6
11					0.6
12					0.6
13					0.6
14					
15					
16					
17					
18					
19					
20					
21					
22					
23					
24					
25					
26					
27					
28					
29					
30					
31					

Security Classification	Compal Secret Data		
Issued Date	2006/02/13	Deciphered Date	2006/03/10

THIS SHEET OF ENGINEERING DRAWING IS THE PROPRIETARY PROPERTY OF COMPAL ELECTRONICS, INC. AND CONTAINS CONFIDENTIAL AND TRADE SECRET INFORMATION. THIS SHEET MAY NOT BE TRANSFERED FROM THE CUSTODY OF THE COMPETENT DIVISION OF R&D DEPARTMENT EXCEPT AS AUTHORIZED BY COMPAL ELECTRONICS, INC. NEITHER THIS SHEET NOR THE INFORMATION IT CONTAINS MAY BE USED BY OR DISCLOSED TO ANY THIRD PARTY WITHOUT PRIOR WRITTEN CONSENT OF COMPAL ELECTRONICS, INC.

Compal Electronics, Inc.

Title: **Hardware revision (0.5 to 0.6)**

Size: Custom | Document Number: LA-4901P | Rev: 1.0

Date: Tuesday, December 15, 2009 | Sheet 54 of 54