Compal confidential

Schematics Document

AMD K8 with
ATI RS480M+ATI SB400

2006-03-06
REV:1.0

Security Classification	Compal Secret Data		
Issued Date	2005/03/01	Deciphered Date	2005/04/06

THIS SHEET OF ENGINEERING DRAWING IS THE PROPRIETARY PROPERTY OF COMPAL ELECTRONICS, INC. AND CONTAINS CONFIDENTIAL AND TRADE SECRET INFORMATION. THIS SHEET MAY NOT BE TRANSFERED FROM THE CUSTODY OF THE COMPETENT DIVISION OF R&D DEPARTMENT EXCEPT AS AUTHORIZED BY COMPAL ELECTRONICS, INC. NEITHER THIS SHEET NOR THE INFORMATION IT CONTAINS MAY BE USED BY OR DISCLOSED TO ANY THIRD PARTY WITHOUT PRIOR WRITTEN CONSENT OF COMPAL ELECTRONICS, INC.

Compal Electronics, inc.

Title	SCHEMATIC, M/B LA-3181P	
Size Custom	Document Number 401417	Rev B
Date: 星期三, 三月 08, 2006	Sheet 1 of 54	

Compal confidential

File Name : LA-3181P

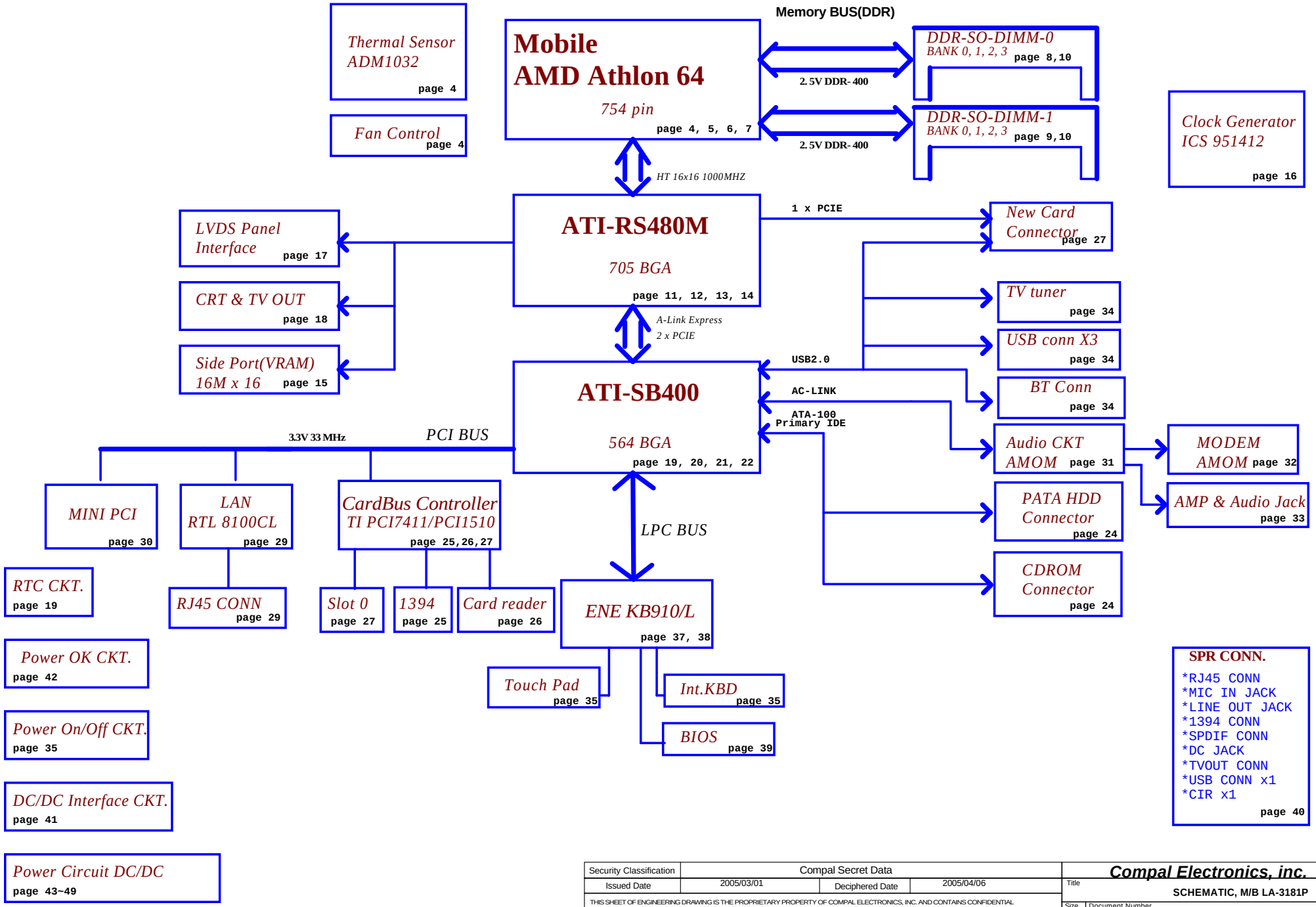

Security Classification	Compal Secret Data		
Issued Date	2005/03/01	Deciphered Date	2005/04/06

THIS SHEET OF ENGINEERING DRAWING IS THE PROPRIETARY PROPERTY OF COMPAL ELECTRONICS, INC. AND CONTAINS CONFIDENTIAL AND TRADE SECRET INFORMATION. THIS SHEET MAY NOT BE TRANSFERED FROM THE CUSTODY OF THE COMPETENT DIVISION OF R&D DEPARTMENT EXCEPT AS AUTHORIZED BY COMPAL ELECTRONICS, INC. NEITHER THIS SHEET NOR THE INFORMATION IT CONTAINS MAY BE USED BY OR DISCLOSED TO ANY THIRD PARTY WITHOUT PRIOR WRITTEN CONSENT OF COMPAL ELECTRONICS, INC.

Compal Electronics, inc.

Title: SCHEMATIC, M/B LA-3181P

Size: Custom | Document Number: 401417 | Rev: B

Date: 星期三, 三月 08, 2006 | Sheet 2 of 54

Voltage Rails

power plane / State	+12VALW +5VALW +3VALW +1.8VALW	+5V +2.5V +1.25V	+5VS +3VS +2.5VS +1.8VS +1.5VS +2.5VDDA +CPU_CORE +1.2V_HT
S0	O	O	O
S1	O	O	O
S3	O	O	X
S5 S4/AC	O	X	X
S5 S4/AC don't exist	X	X	X

O MEANS ON
X MEANS OFF

PCI Devices

INTERNAL DEVICE	IDSEL #	REQ/GNT #	PIRQ
SMBUS			
IDE			A
LPC I/F			
PCI to PCI			
AC97 AUDIO			B
AC97 MODEM			B
OHCI#1 USB			D
OHCI#1 USB			D
EHCI USB			D
SATA#1			A
SATA#2			A

EXTERNAL			
Wireless LAN	AD18	3	F
LAN	AD22	1	G
CARD BUS & 1394	AD20	2	E,H

BOM STATUS :

VRAM@ ,VRAMIC@, SAMSUNG@, HYNIX@, 2HDD@ ,7411@ ,EXP@ ,17_EXP@ ,15_EXO@,CIR@ ,D@, C@, 15.4@, DOCK@, WL_LED@

45@ (for 45 level RTC battery)

HAL10 17"	VRAM@ , SAMSUNG@, HYNIX@, 2HDD@ ,7411@ ,EXP@ ,17_EXP@ ,CIR@ ,D@ ,DOCK@,WL_LED@
HAL20 FF 15.4"	VRAM@ , SAMSUNG@, HYNIX@, 2HDD@ ,7411@ ,EXP@ ,15_EXP@ ,CIR@ ,C@ ,DOCK@,WL_LED@, 15.4@(LED)
HAL20 DF 15.4"	EXP@, C@ ,DOCK@ ,15.4@(LED), CIR@, WLAN@, 15_EXP@

THIS SHEET OF ENGINEERING DRAWING IS THE PROPRIETARY PROPERTY OF COMPAL ELECTRONICS, INC. AND CONTAINS CONFIDENTIAL AND TRADE SECRET INFORMATION. THIS SHEET MAY NOT BE TRANSFERED FROM THE CUSTODY OF THE COMPETENT DIVISION OF R&D DEPARTMENT EXCEPT AS AUTHORIZED BY COMPAL ELECTRONICS, INC. NEITHER THIS SHEET NOR THE INFORMATION IT CONTAINS MAY BE USED BY OR DISCLOSED TO ANY THIRD PARTY WITHOUT PRIOR WRITTEN CONSENT OF COMPAL ELECTRONICS, INC.

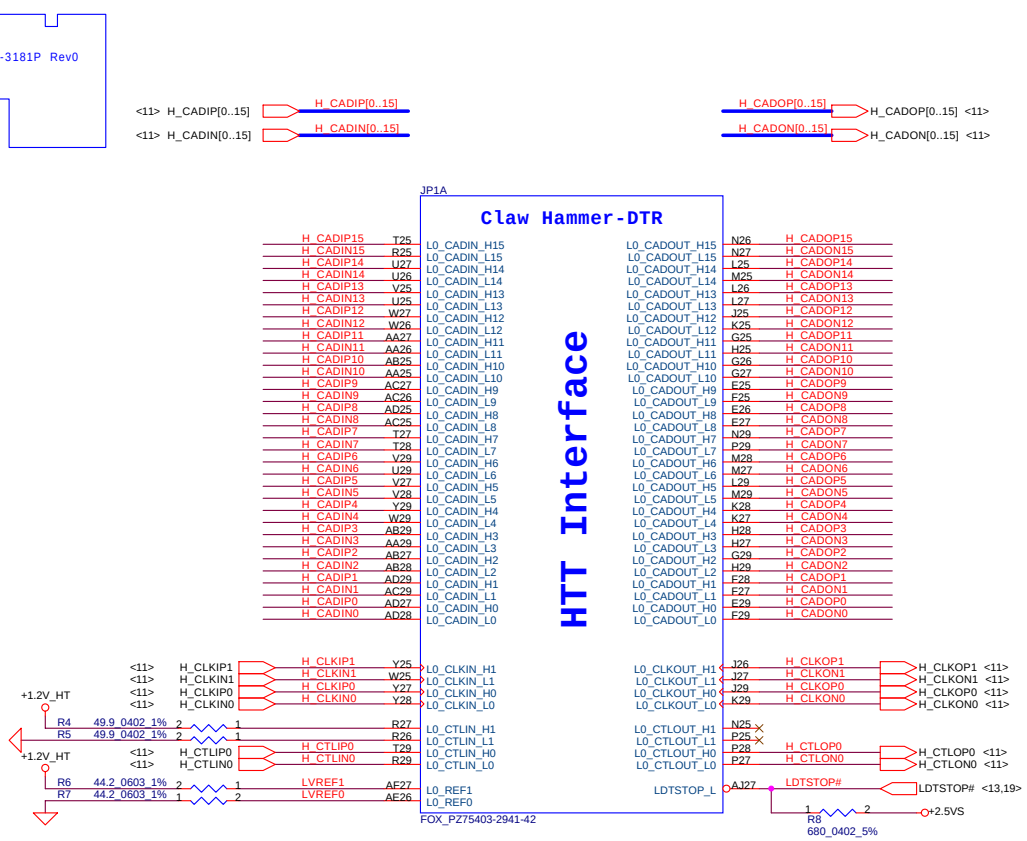

Fan Control Circuit

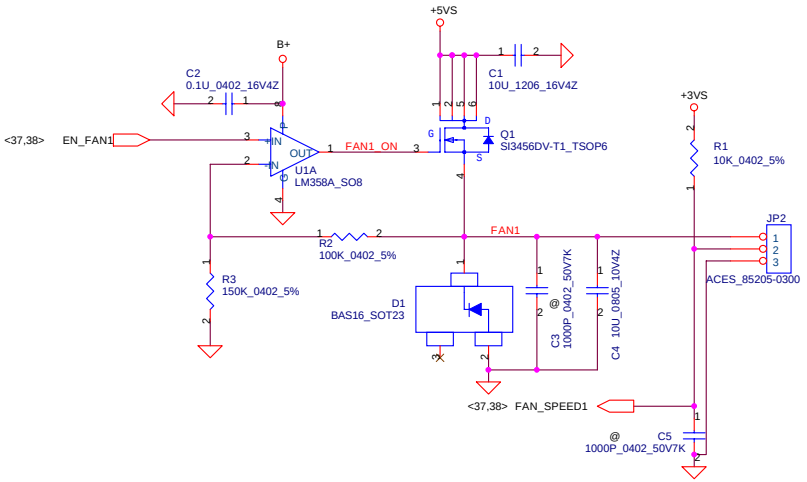

Thermal Sensor ADM1032

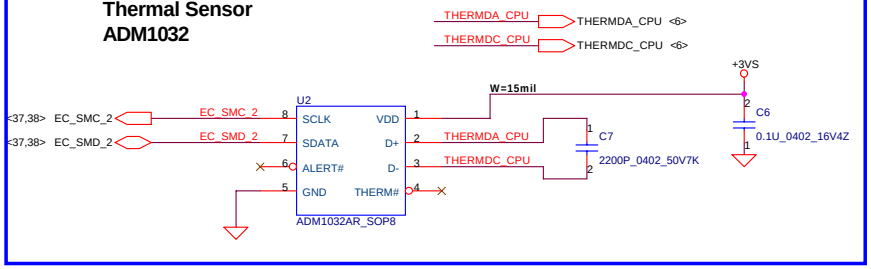

Security Classification	Compal Secret Data		
Issued Date	2005/03/01	Deciphered Date	2005/04/06

THIS SHEET OF ENGINEERING DRAWING IS THE PROPRIETARY PROPERTY OF COMPAL ELECTRONICS, INC. AND CONTAINS CONFIDENTIAL AND TRADE SECRET INFORMATION. THIS SHEET MAY NOT BE TRANSFERED FROM THE CUSTODY OF THE COMPETENT DIVISION OF R&D DEPARTMENT EXCEPT AS AUTHORIZED BY COMPAL ELECTRONICS, INC. NEITHER THIS SHEET NOR THE INFORMATION IT CONTAINS MAY BE USED BY OR DISCLOSED TO ANY THIRD PARTY WITHOUT PRIOR WRITTEN CONSENT OF COMPAL ELECTRONICS, INC.

Compal Electronics, inc.

Title: SCHEMATIC, M/B LA-3181P

Size: Custom | Document Number: 401417 | Rev: B

Date: 星期三, 三月 08, 2006 | Sheet 4 of 54

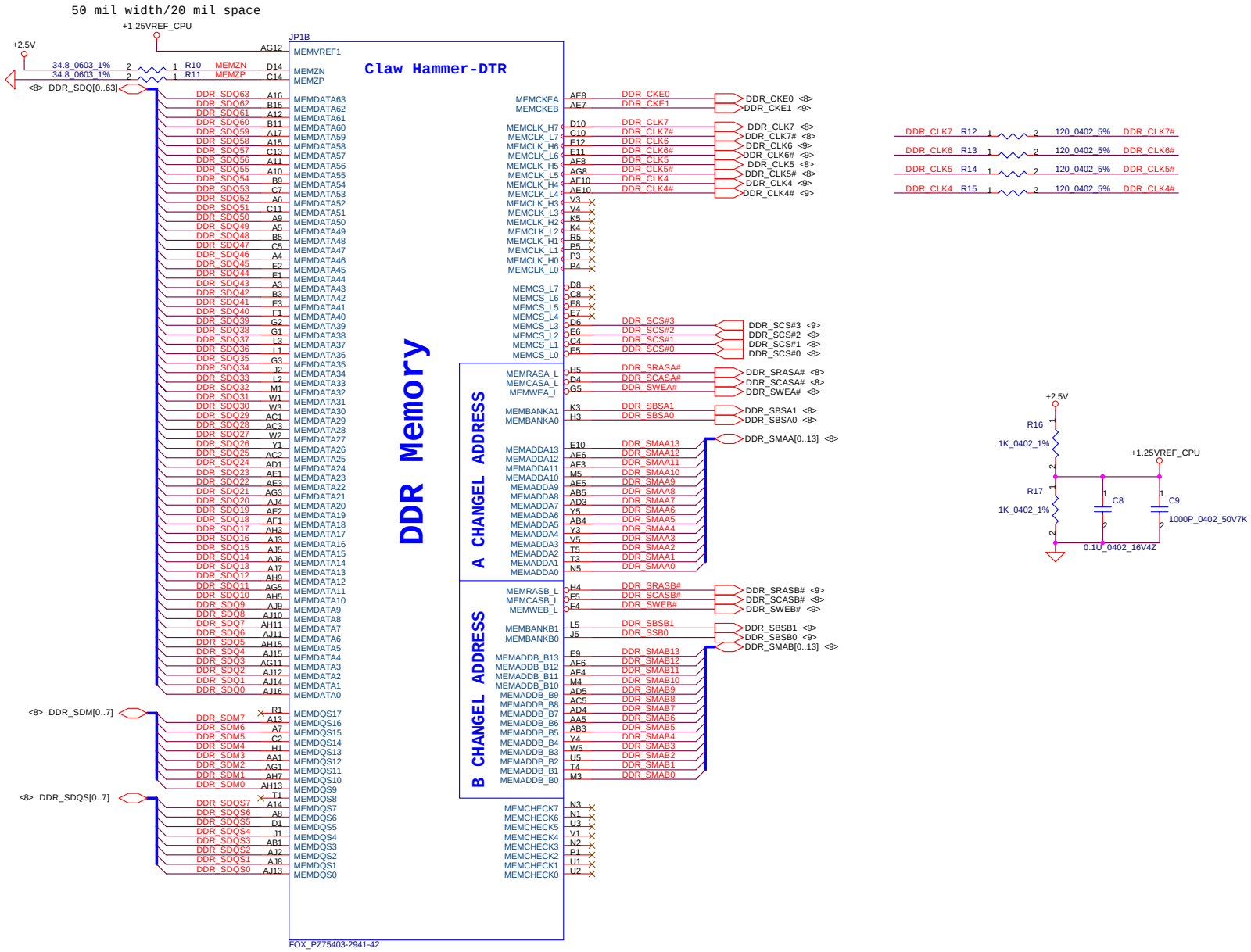

Security Classification	Compal Secret Data		
Issued Date	2005/03/01	Deciphered Date	2005/04/06

THIS SHEET OF ENGINEERING DRAWING IS THE PROPRIETARY PROPERTY OF COMPAL ELECTRONICS, INC. AND CONTAINS CONFIDENTIAL AND TRADE SECRET INFORMATION. THIS SHEET MAY NOT BE TRANSFERED FROM THE CUSTODY OF THE COMPETENT DIVISION OF R&D DEPARTMENT EXCEPT AS AUTHORIZED BY COMPAL ELECTRONICS, INC. NEITHER THIS SHEET NOR THE INFORMATION IT CONTAINS MAY BE USED BY OR DISCLOSED TO ANY THIRD PARTY WITHOUT PRIOR WRITTEN CONSENT OF COMPAL ELECTRONICS, INC.

Compal Electronics, inc.

Title: SCHEMATIC, M/B LA-3181P

Size: Custom | Document Number: 401417 | Rev: B

Date: 星期三, 三月 08, 2006 | Sheet 5 of 54

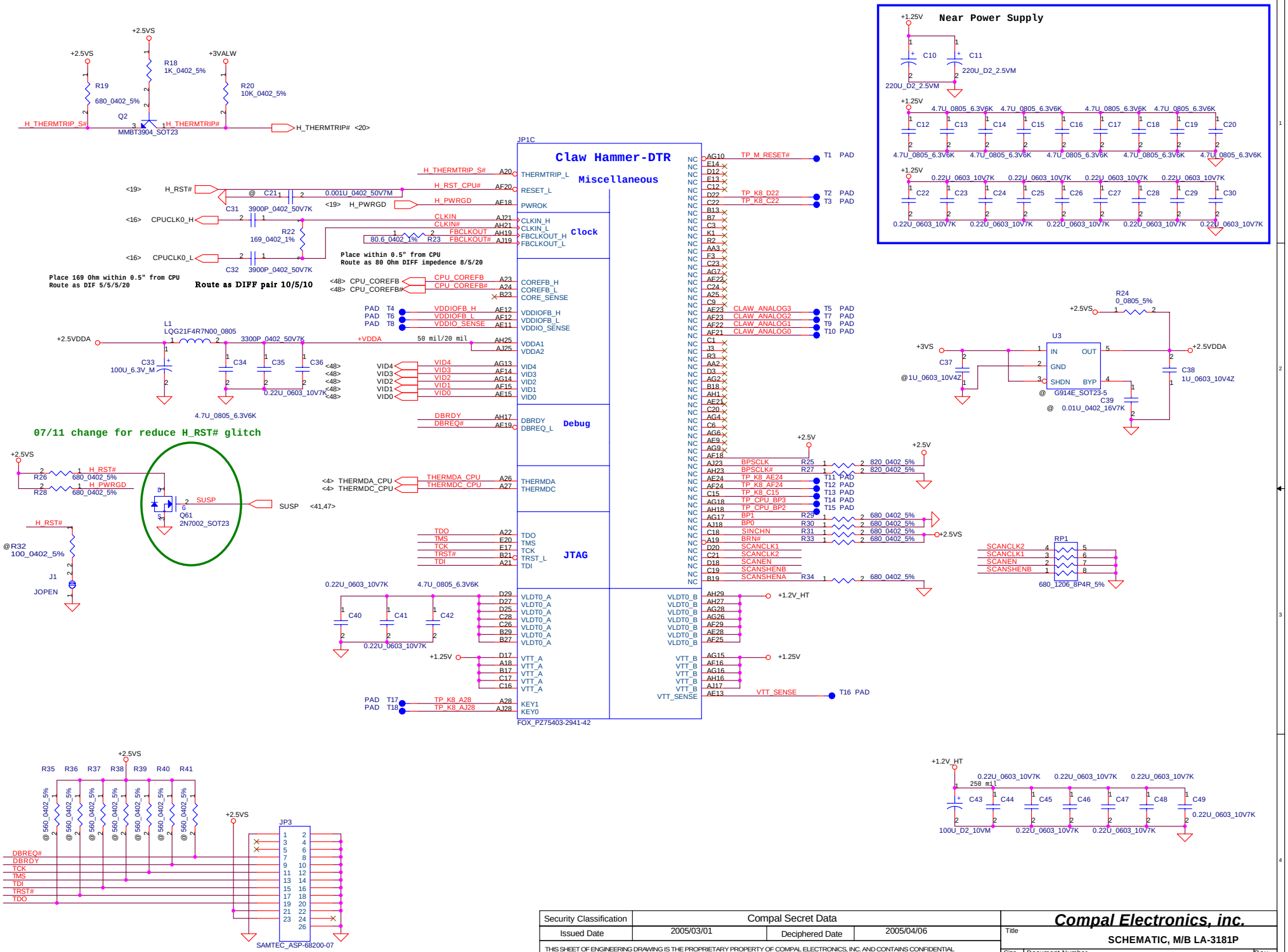

Security Classification	Compal Secret Data		
Issued Date	2005/03/01	Deciphered Date	2005/04/06

THIS SHEET OF ENGINEERING DRAWING IS THE PROPRIETARY PROPERTY OF COMPAL ELECTRONICS, INC. AND CONTAINS CONFIDENTIAL AND TRADE SECRET INFORMATION. THIS SHEET MAY NOT BE TRANSFERED FROM THE CUSTODY OF THE COMPETENT DIVISION OF R&D DEPARTMENT EXCEPT AS AUTHORIZED BY COMPAL ELECTRONICS, INC. NEITHER THIS SHEET NOR THE INFORMATION IT CONTAINS MAY BE USED BY OR DISCLOSED TO ANY THIRD PARTY WITHOUT PRIOR WRITTEN CONSENT OF COMPAL ELECTRONICS, INC.

Compal Electronics, inc.

Title: SCHEMATIC, M/B LA-3181P

Size: Custom | Document Number: 401417 | Rev: B

Date: 星期三, 三月 08, 2006 | Sheet 6 of 54

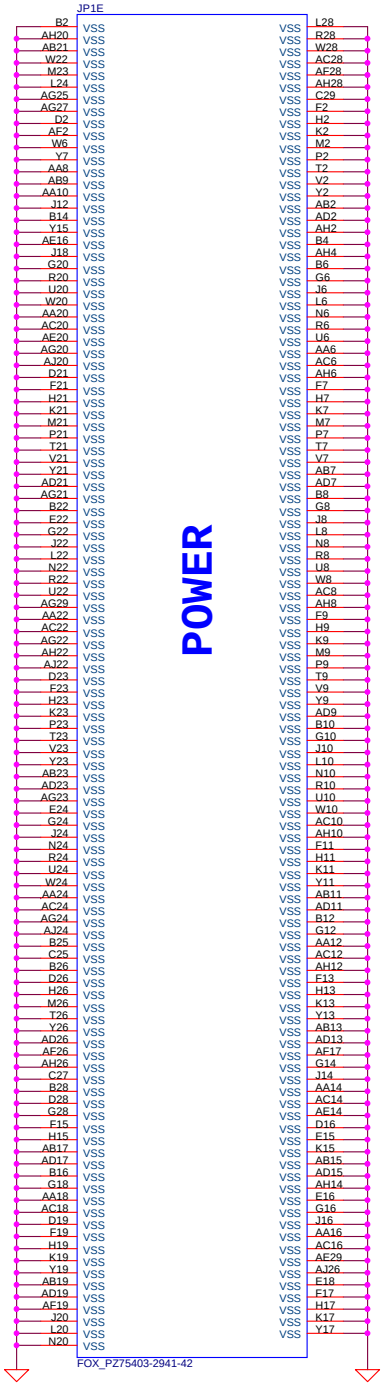

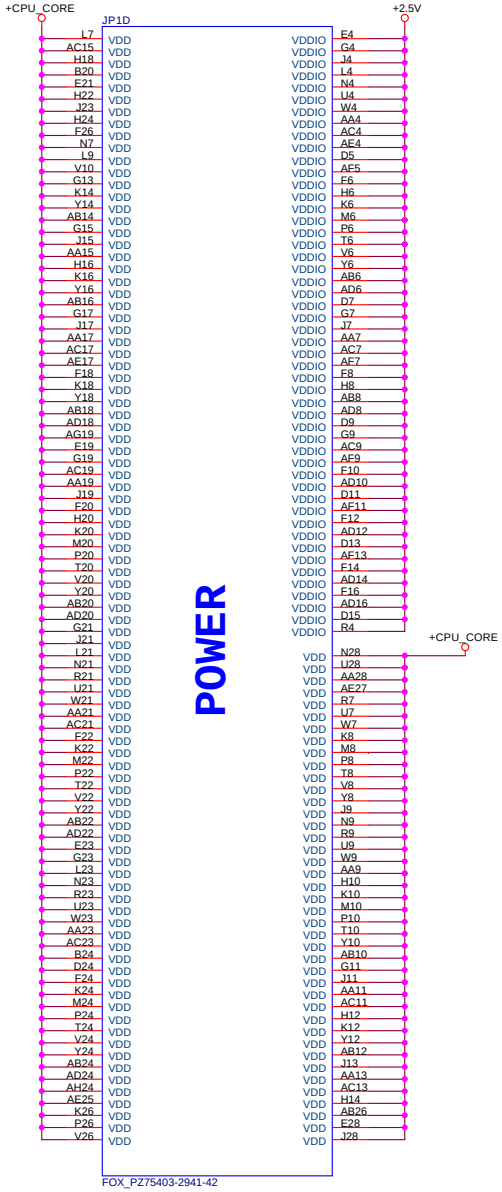

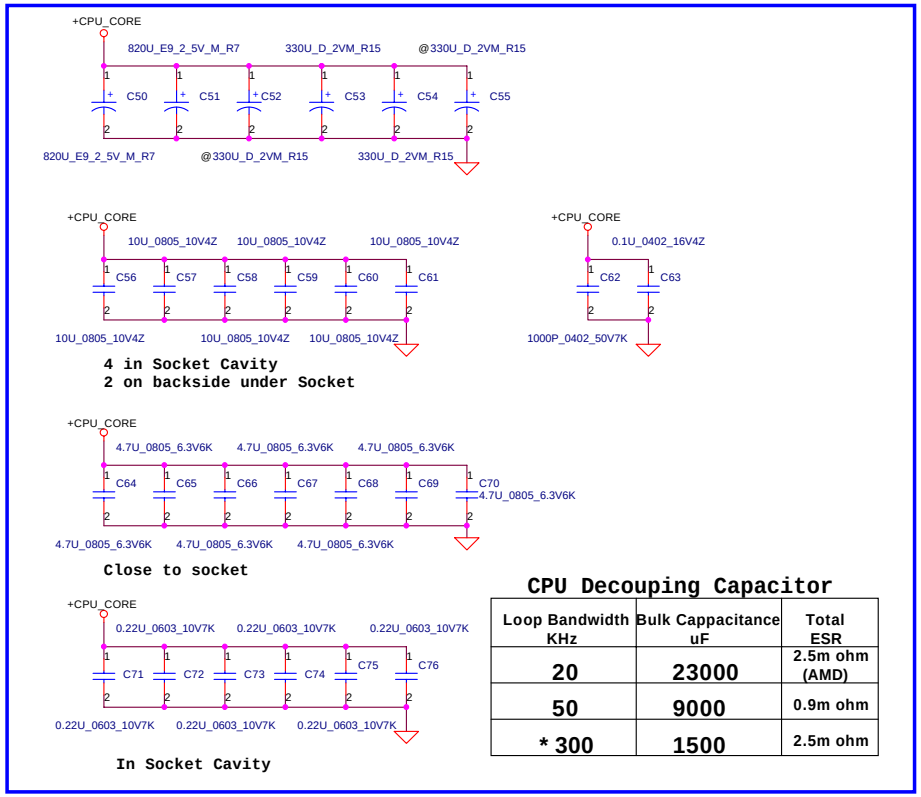

CPU Decouping Capacitor

Loop Bandwidth KHz	Bulk Cappacitance uF	Total ESR
20	23000	2.5m ohm (AMD)
50	9000	0.9m ohm
* 300	1500	2.5m ohm

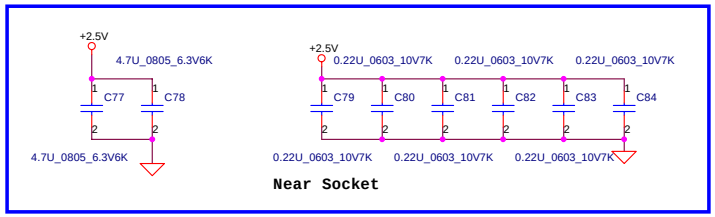

For EMI require

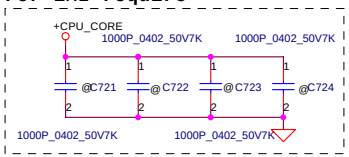

Security Classification	Compal Secret Data		
Issued Date	2005/03/01	Deciphered Date	2005/04/06

THIS SHEET OF ENGINEERING DRAWING IS THE PROPRIETARY PROPERTY OF COMPAL ELECTRONICS, INC. AND CONTAINS CONFIDENTIAL AND TRADE SECRET INFORMATION. THIS SHEET MAY NOT BE TRANSFERED FROM THE CUSTODY OF THE COMPETENT DIVISION OF R&D DEPARTMENT EXCEPT AS AUTHORIZED BY COMPAL ELECTRONICS, INC. NEITHER THIS SHEET NOR THE INFORMATION IT CONTAINS MAY BE USED BY OR DISCLOSED TO ANY THIRD PARTY WITHOUT PRIOR WRITTEN CONSENT OF COMPAL ELECTRONICS, INC.

Compal Electronics, inc.

Title: SCHEMATIC, M/B LA-3181P

Size: Custom | Document Number: 401417 | Rev: B

Date: 星期三, 三月 08, 2006 | Sheet 7 of 54

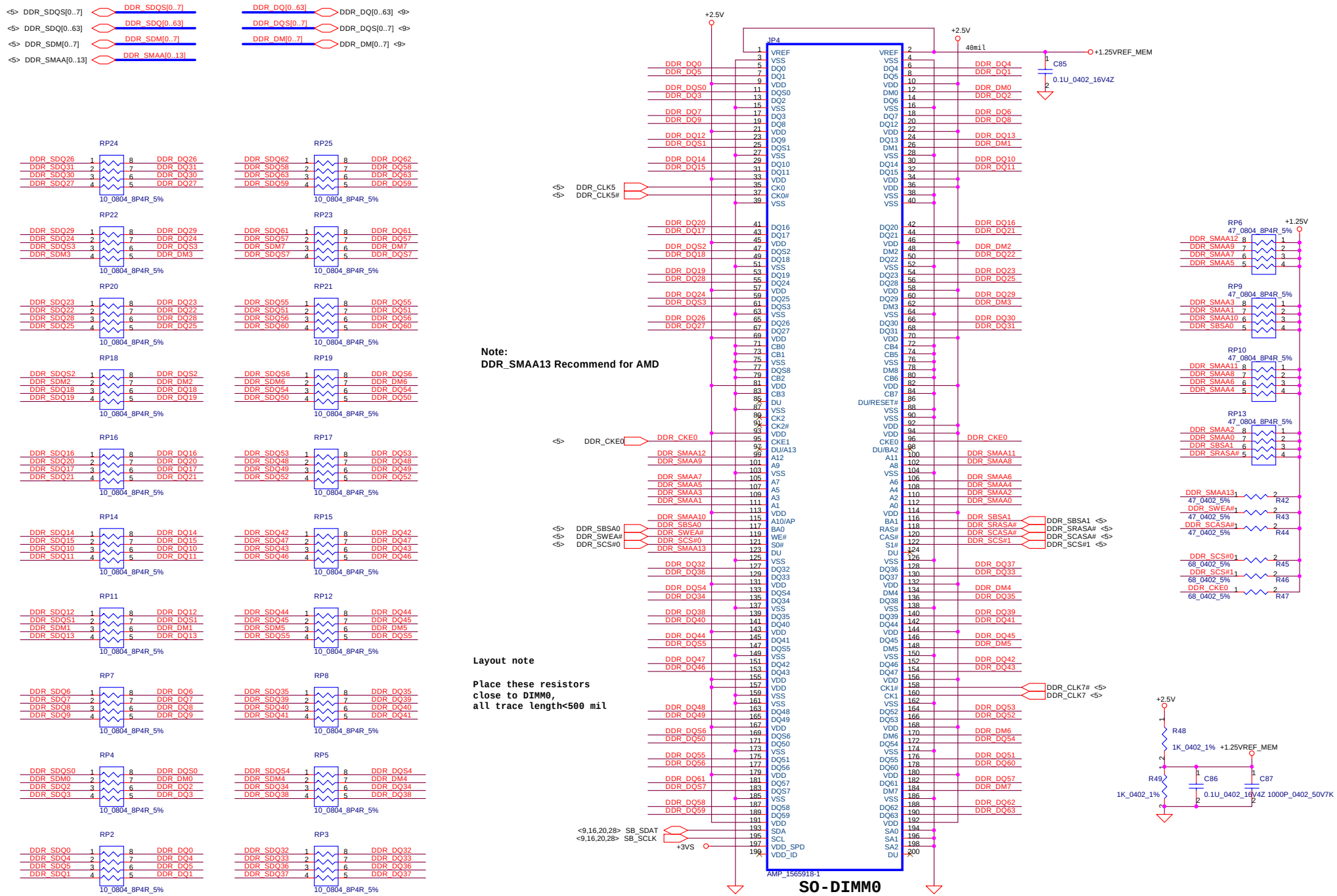

Note:
DDR_SMAA13 Recommend for AMD

Layout note

Place these resistors close to DIMM0, all trace length<500 mil

Security Classification	Compal Secret Data		
Issued Date	2005/03/01	Deciphered Date	2005/04/06

THIS SHEET OF ENGINEERING DRAWING IS THE PROPRIETARY PROPERTY OF COMPAL ELECTRONICS, INC. AND CONTAINS CONFIDENTIAL AND TRADE SECRET INFORMATION. THIS SHEET MAY NOT BE TRANSFERED FROM THE CUSTODY OF THE COMPETENT DIVISION OF R&D DEPARTMENT EXCEPT AS AUTHORIZED BY COMPAL ELECTRONICS, INC. NEITHER THIS SHEET NOR THE INFORMATION IT CONTAINS MAY BE USED BY OR DISCLOSED TO ANY THIRD PARTY WITHOUT PRIOR WRITTEN CONSENT OF COMPAL ELECTRONICS, INC.

Compal Electronics, inc.

Title: **SCHEMATIC, M/B LA-3181P**

Size: Custom | Document Number: **401417** | Rev: B

Date: 星期三, 三月 08, 2006 | Sheet 8 of 54

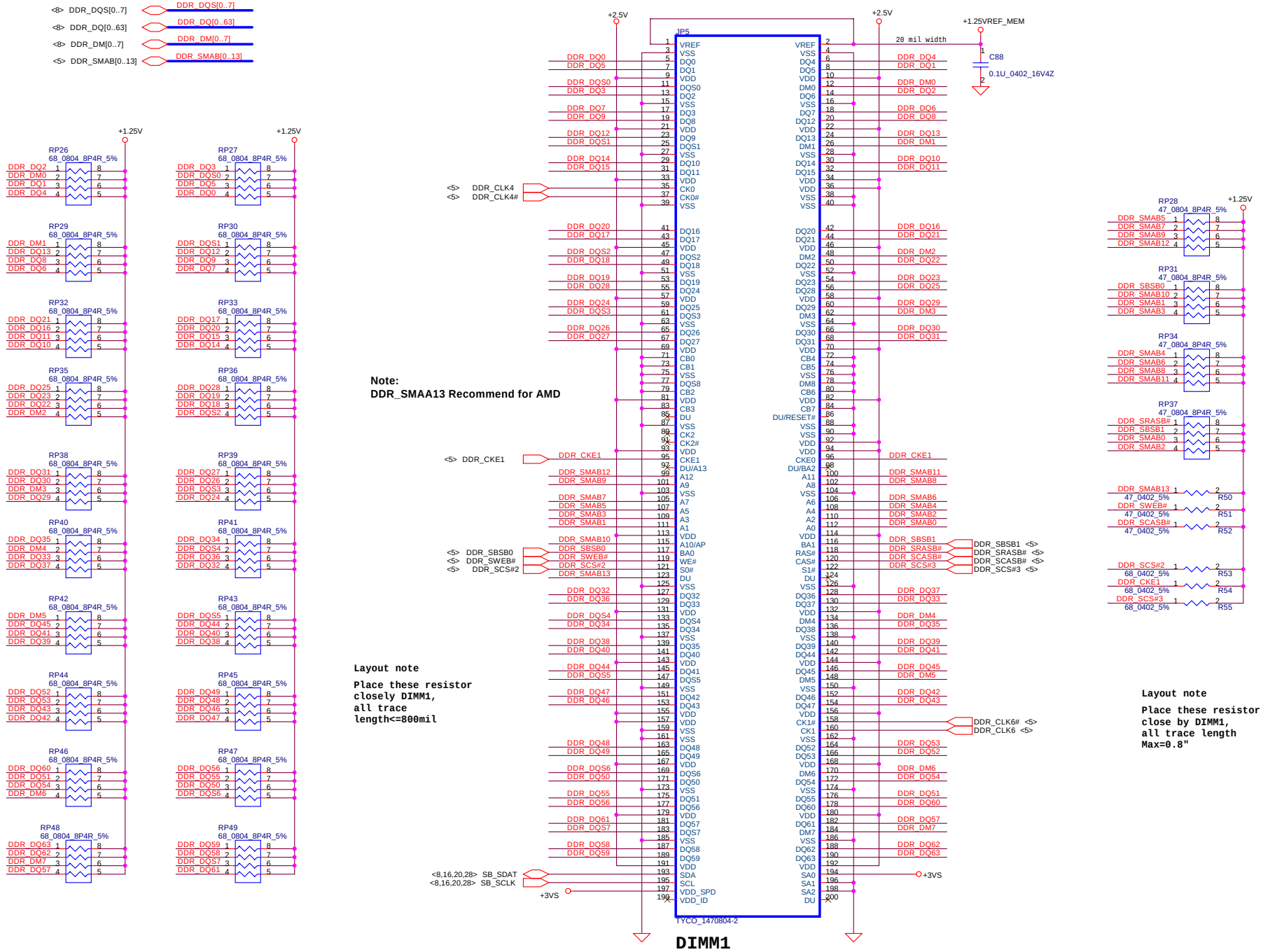

Security Classification	Compal Secret Data		
Issued Date	2005/03/01	Deciphered Date	2005/04/06

THIS SHEET OF ENGINEERING DRAWING IS THE PROPRIETARY PROPERTY OF COMPAL ELECTRONICS, INC. AND CONTAINS CONFIDENTIAL AND TRADE SECRET INFORMATION. THIS SHEET MAY NOT BE TRANSFERED FROM THE CUSTODY OF THE COMPETENT DIVISION OF R&D DEPARTMENT EXCEPT AS AUTHORIZED BY COMPAL ELECTRONICS, INC. NEITHER THIS SHEET NOR THE INFORMATION IT CONTAINS MAY BE USED BY OR DISCLOSED TO ANY THIRD PARTY WITHOUT PRIOR WRITTEN CONSENT OF COMPAL ELECTRONICS, INC.

Compal Electronics, inc.

Title: SCHEMATIC, M/B LA-3181P

Size: Custom | Document Number: 401417 | Rev: B

Date: 星期三, 三月 08, 2006 | Sheet 9 of 54

Layout note :

Place one cap close to every 2 pull up resistors termination to +1.25V

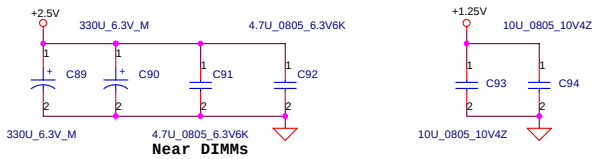

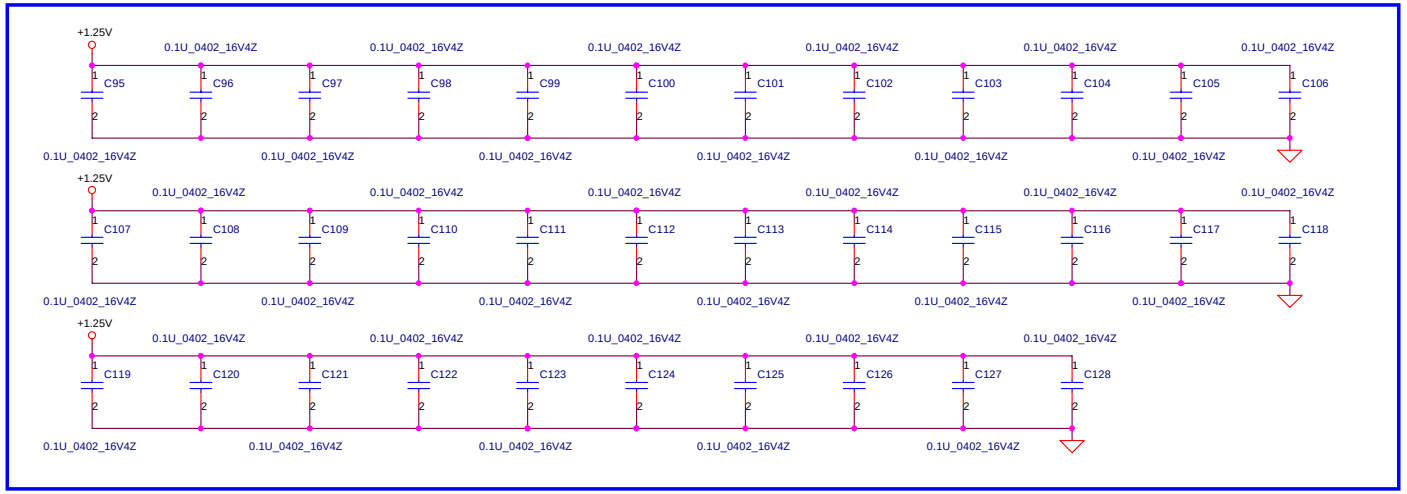

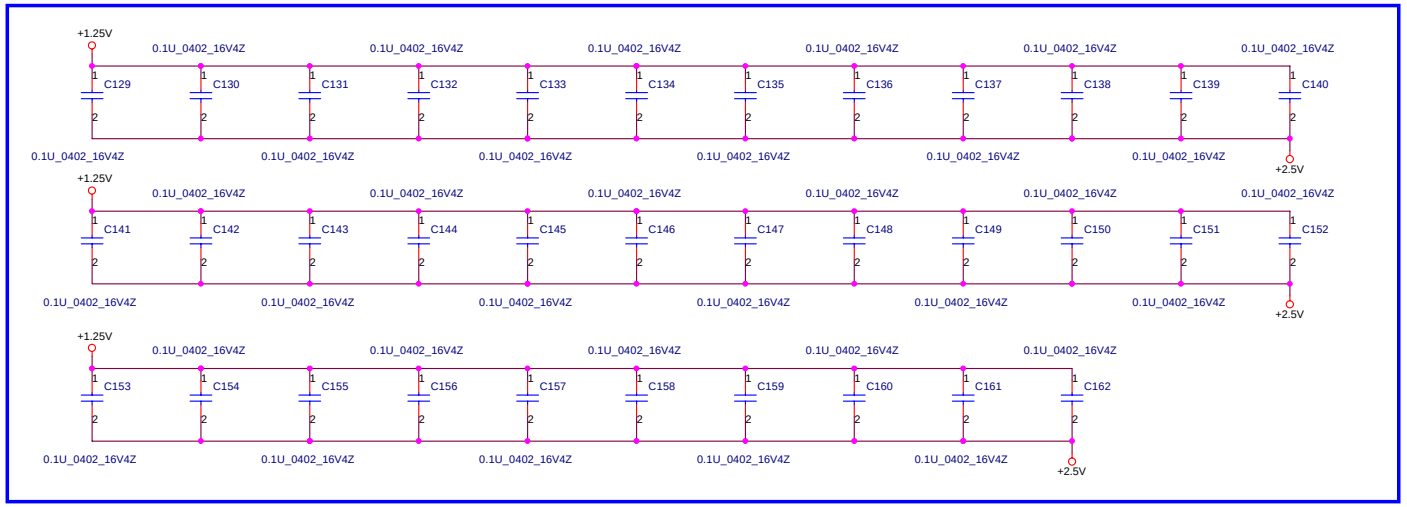

Security Classification	Compal Secret Data		
Issued Date	2005/03/01	Deciphered Date	2005/04/06

THIS SHEET OF ENGINEERING DRAWING IS THE PROPRIETARY PROPERTY OF COMPAL ELECTRONICS, INC. AND CONTAINS CONFIDENTIAL AND TRADE SECRET INFORMATION. THIS SHEET MAY NOT BE TRANSFERED FROM THE CUSTODY OF THE COMPETENT DIVISION OF R&D DEPARTMENT EXCEPT AS AUTHORIZED BY COMPAL ELECTRONICS, INC. NEITHER THIS SHEET NOR THE INFORMATION IT CONTAINS MAY BE USED BY OR DISCLOSED TO ANY THIRD PARTY WITHOUT PRIOR WRITTEN CONSENT OF COMPAL ELECTRONICS, INC.

Compal Electronics, inc.

Title: **SCHEMATIC, M/B LA-3181P**

Size: Custom | Document Number: **401417** | Rev: B

Date: 星期三, 三月 08, 2006 | Sheet 10 of 54

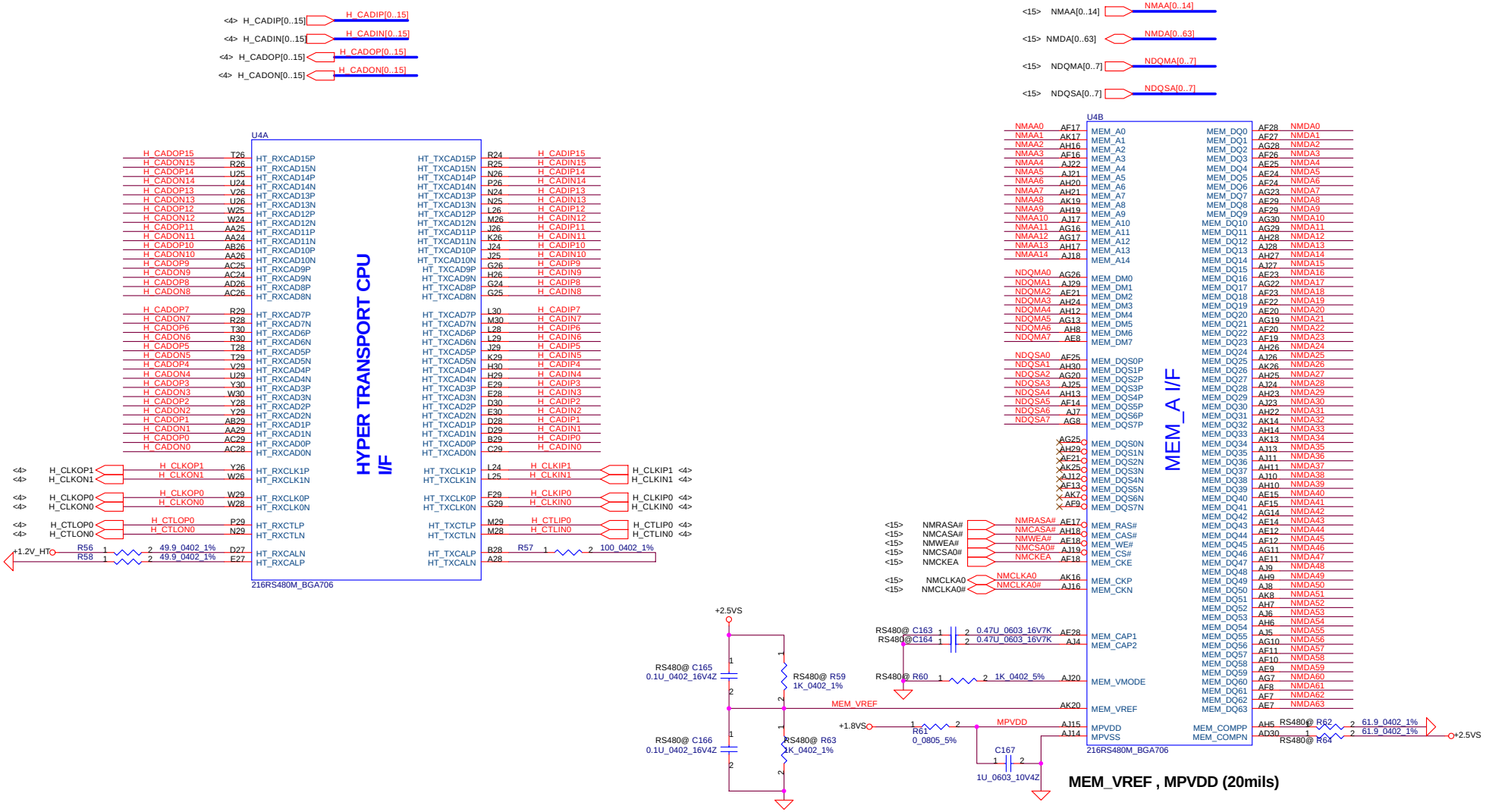

Security Classification	Compal Secret Data		
Issued Date	2005/03/01	Deciphered Date	2005/04/06

THIS SHEET OF ENGINEERING DRAWING IS THE PROPRIETARY PROPERTY OF COMPAL ELECTRONICS, INC. AND CONTAINS CONFIDENTIAL AND TRADE SECRET INFORMATION. THIS SHEET MAY NOT BE TRANSFERED FROM THE CUSTODY OF THE COMPETENT DIVISION OF R&D DEPARTMENT EXCEPT AS AUTHORIZED BY COMPAL ELECTRONICS, INC. NEITHER THIS SHEET NOR THE INFORMATION IT CONTAINS MAY BE USED BY OR DISCLOSED TO ANY THIRD PARTY WITHOUT PRIOR WRITTEN CONSENT OF COMPAL ELECTRONICS, INC.

Compal Electronics, inc.

Title: SCHEMATIC, M/B LA-3181P

Size: Custom | Document Number: 401417 | Rev: B

Date: 星期三, 三月 08, 2006 | Sheet 11 of 54

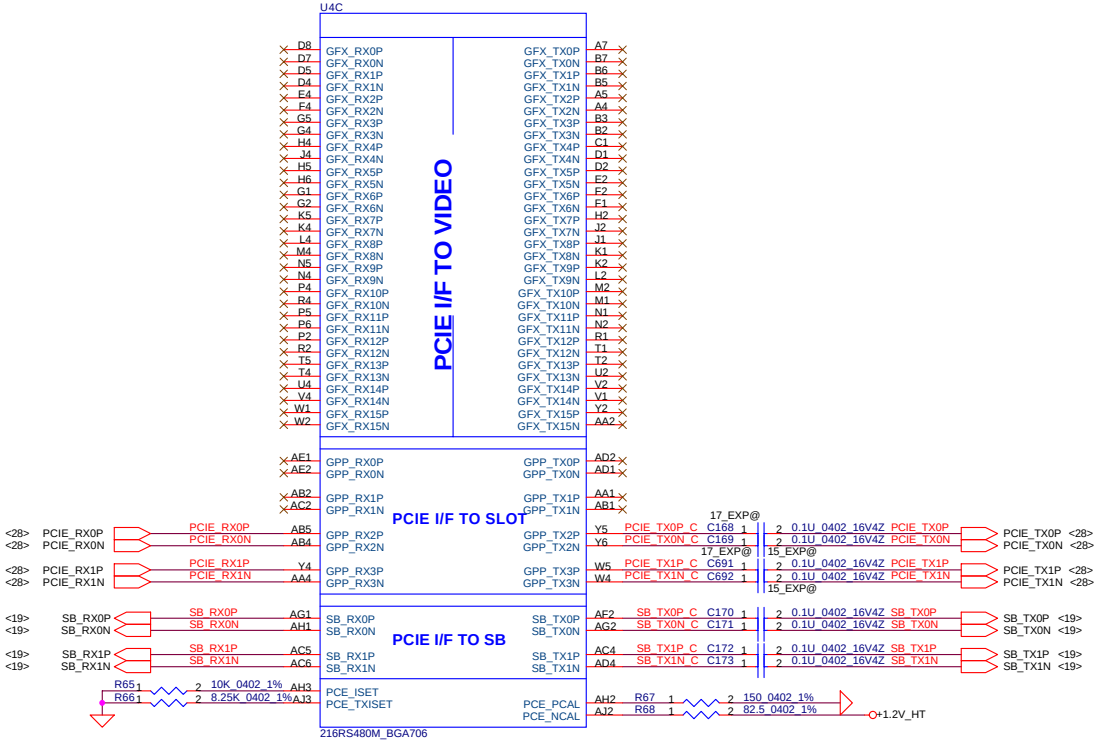

Security Classification	Compal Secret Data		
Issued Date	2005/03/01	Deciphered Date	2005/04/06

THIS SHEET OF ENGINEERING DRAWING IS THE PROPRIETARY PROPERTY OF COMPAL ELECTRONICS, INC. AND CONTAINS CONFIDENTIAL AND TRADE SECRET INFORMATION. THIS SHEET MAY NOT BE TRANSFERED FROM THE CUSTODY OF THE COMPETENT DIVISION OF R&D DEPARTMENT EXCEPT AS AUTHORIZED BY COMPAL ELECTRONICS, INC. NEITHER THIS SHEET NOR THE INFORMATION IT CONTAINS MAY BE USED BY OR DISCLOSED TO ANY THIRD PARTY WITHOUT PRIOR WRITTEN CONSENT OF COMPAL ELECTRONICS, INC.

Compal Electronics, inc.

Title: SCHEMATIC, M/B LA-3181P

Size: Custom | Document Number: 401417 | Rev: B

Date: 星期三, 三月 08, 2006 | Sheet 12 of 54

AVDD , AVDDI , AVDDQ , +NB_PLLVDD , +NB_HTPVDD
+NB_VDDR3 , LPVDD , LVDDR18D , LVDDR18A (20mils)

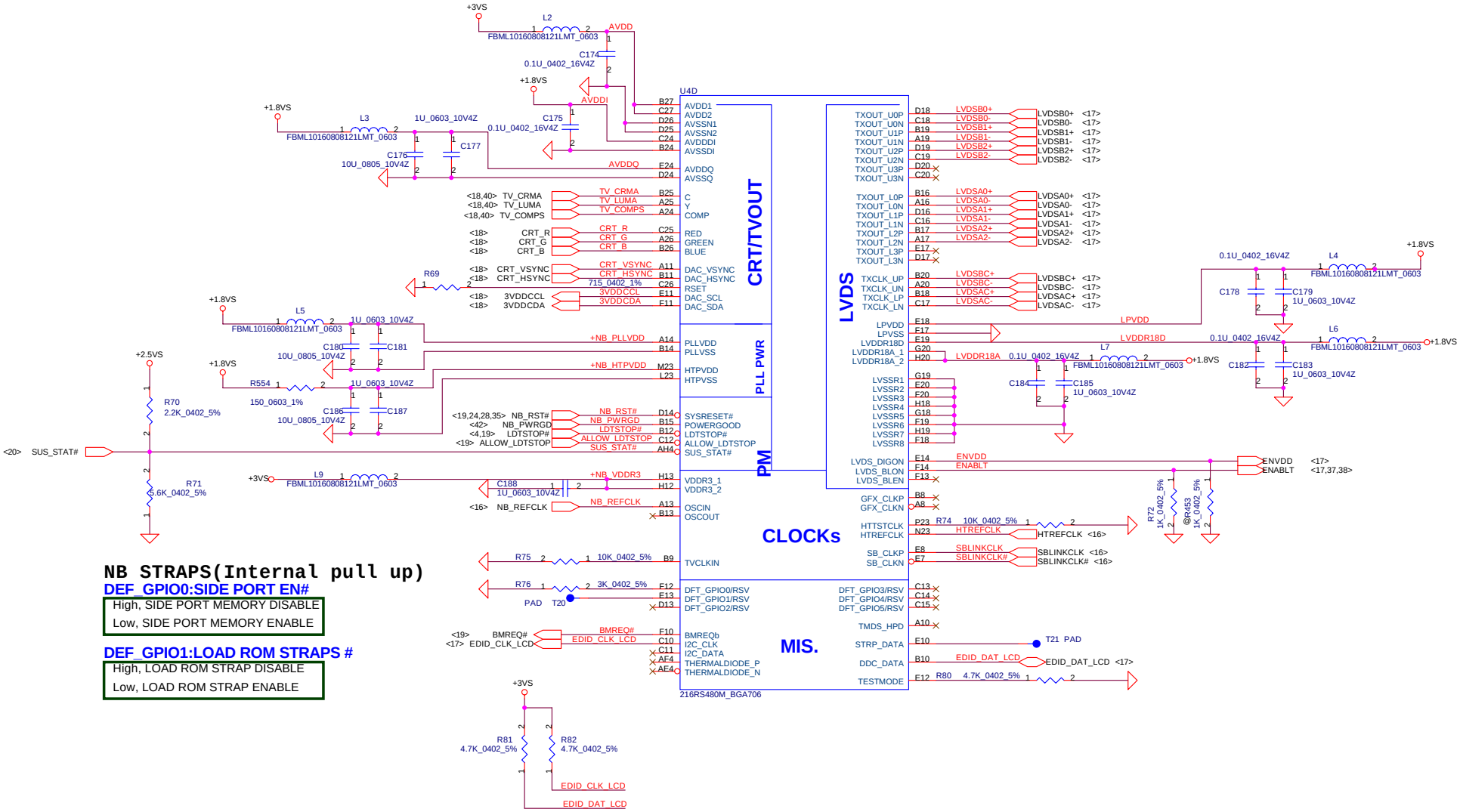

NB STRAPS(Internal pull up)

DEF_GPIO0:SIDE PORT EN#

High, SIDE PORT MEMORY DISABLE
Low, SIDE PORT MEMORY ENABLE

DEF_GPIO1:LOAD ROM STRAPS #

High, LOAD ROM STRAP DISABLE
Low, LOAD ROM STRAP ENABLE

Security Classification	Compal Secret Data		
Issued Date	2005/03/01	Deciphered Date	2005/04/06

THIS SHEET OF ENGINEERING DRAWING IS THE PROPRIETARY PROPERTY OF COMPAL ELECTRONICS, INC. AND CONTAINS CONFIDENTIAL AND TRADE SECRET INFORMATION. THIS SHEET MAY NOT BE TRANSFERED FROM THE CUSTODY OF THE COMPETENT DIVISION OF R&D DEPARTMENT EXCEPT AS AUTHORIZED BY COMPAL ELECTRONICS, INC. NEITHER THIS SHEET NOR THE INFORMATION IT CONTAINS MAY BE USED BY OR DISCLOSED TO ANY THIRD PARTY WITHOUT PRIOR WRITTEN CONSENT OF COMPAL ELECTRONICS, INC.

Compal Electronics, inc.

Title: SCHEMATIC, M/B LA-3181P

Size: Custom | Document Number: 401417 | Rev: B

Date: 星期三, 三月 08, 2006 | Sheet 13 of 54

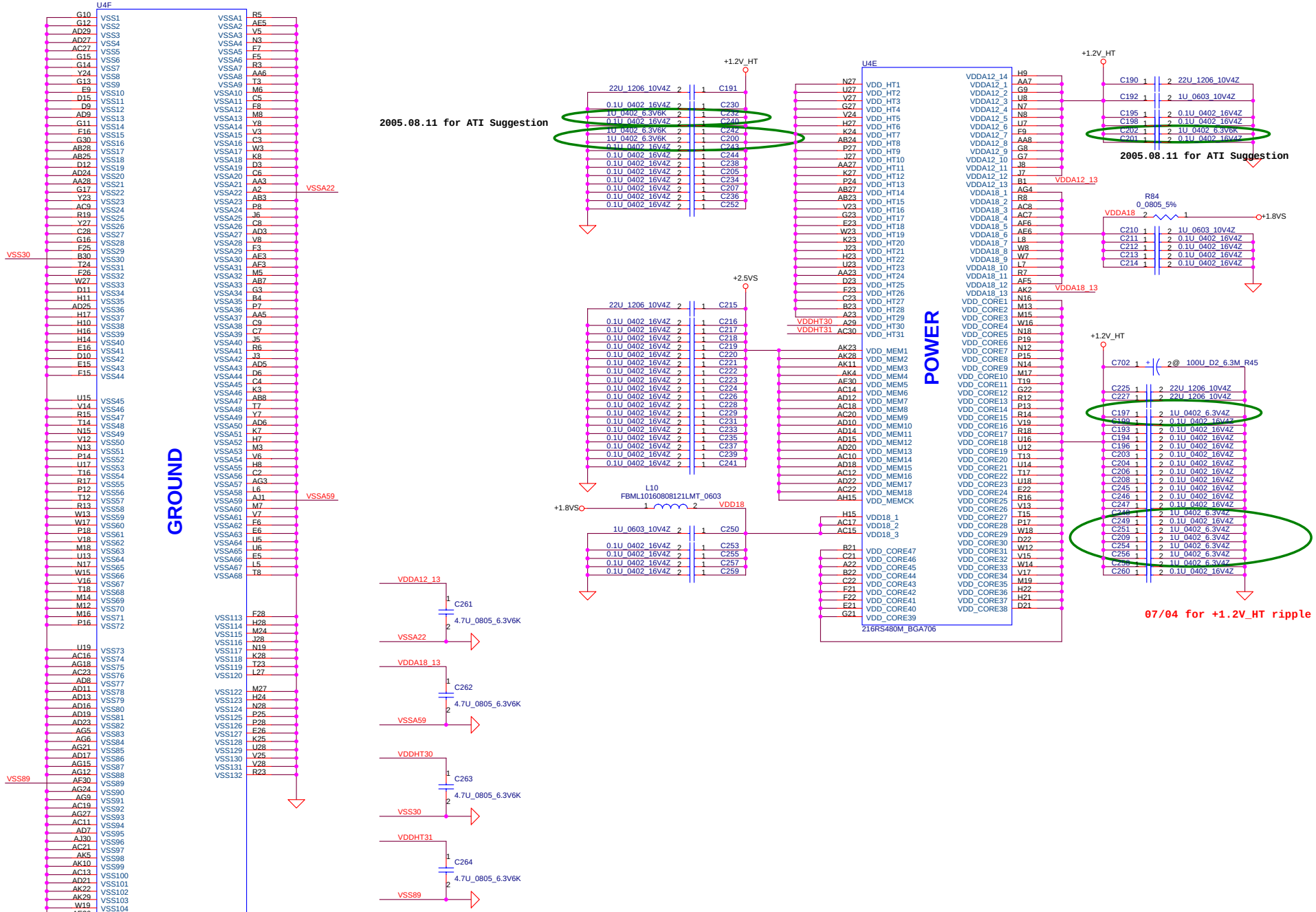

Security Classification	Compal Secret Data		
Issued Date	2005/03/01	Deciphered Date	2005/04/06

THIS SHEET OF ENGINEERING DRAWING IS THE PROPRIETARY PROPERTY OF COMPAL ELECTRONICS, INC. AND CONTAINS CONFIDENTIAL AND TRADE SECRET INFORMATION. THIS SHEET MAY NOT BE TRANSFERED FROM THE CUSTODY OF THE COMPETENT DIVISION OF R&D DEPARTMENT EXCEPT AS AUTHORIZED BY COMPAL ELECTRONICS, INC. NEITHER THIS SHEET NOR THE INFORMATION IT CONTAINS MAY BE USED BY OR DISCLOSED TO ANY THIRD PARTY WITHOUT PRIOR WRITTEN CONSENT OF COMPAL ELECTRONICS, INC.

Compal Electronics, inc.

Title: SCHEMATIC, M/B LA-3181P

Size: Custom | Document Number: 401417 | Rev: B

Date: 星期三, 三月 08, 2006 | Sheet 14 of 54

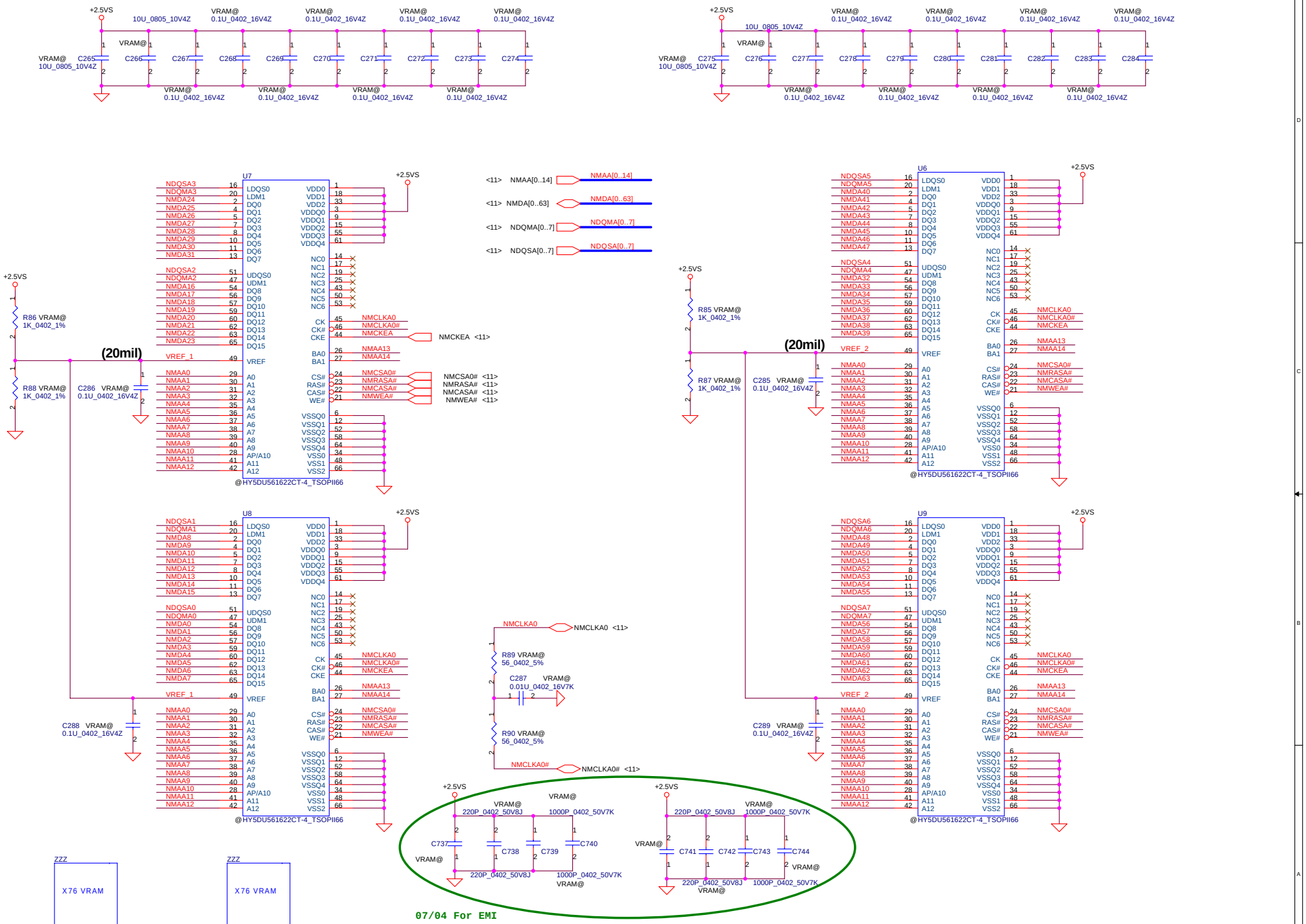

Security Classification	Compal Secret Data		
Issued Date	2005/03/01	Deciphered Date	2005/04/06

THIS SHEET OF ENGINEERING DRAWING IS THE PROPRIETARY PROPERTY OF COMPAL ELECTRONICS, INC. AND CONTAINS CONFIDENTIAL AND TRADE SECRET INFORMATION. THIS SHEET MAY NOT BE TRANSFERED FROM THE CUSTODY OF THE COMPETENT DIVISION OF R&D DEPARTMENT EXCEPT AS AUTHORIZED BY COMPAL ELECTRONICS, INC. NEITHER THIS SHEET NOR THE INFORMATION IT CONTAINS MAY BE USED BY OR DISCLOSED TO ANY THIRD PARTY WITHOUT PRIOR WRITTEN CONSENT OF COMPAL ELECTRONICS, INC.

Compal Electronics, inc.

Title: SCHEMATIC, M/B LA-3181P

Size: Custom | Document Number: 401417 | Rev: B

Date: 星期三, 三月 08, 2006 | Sheet 15 of 54

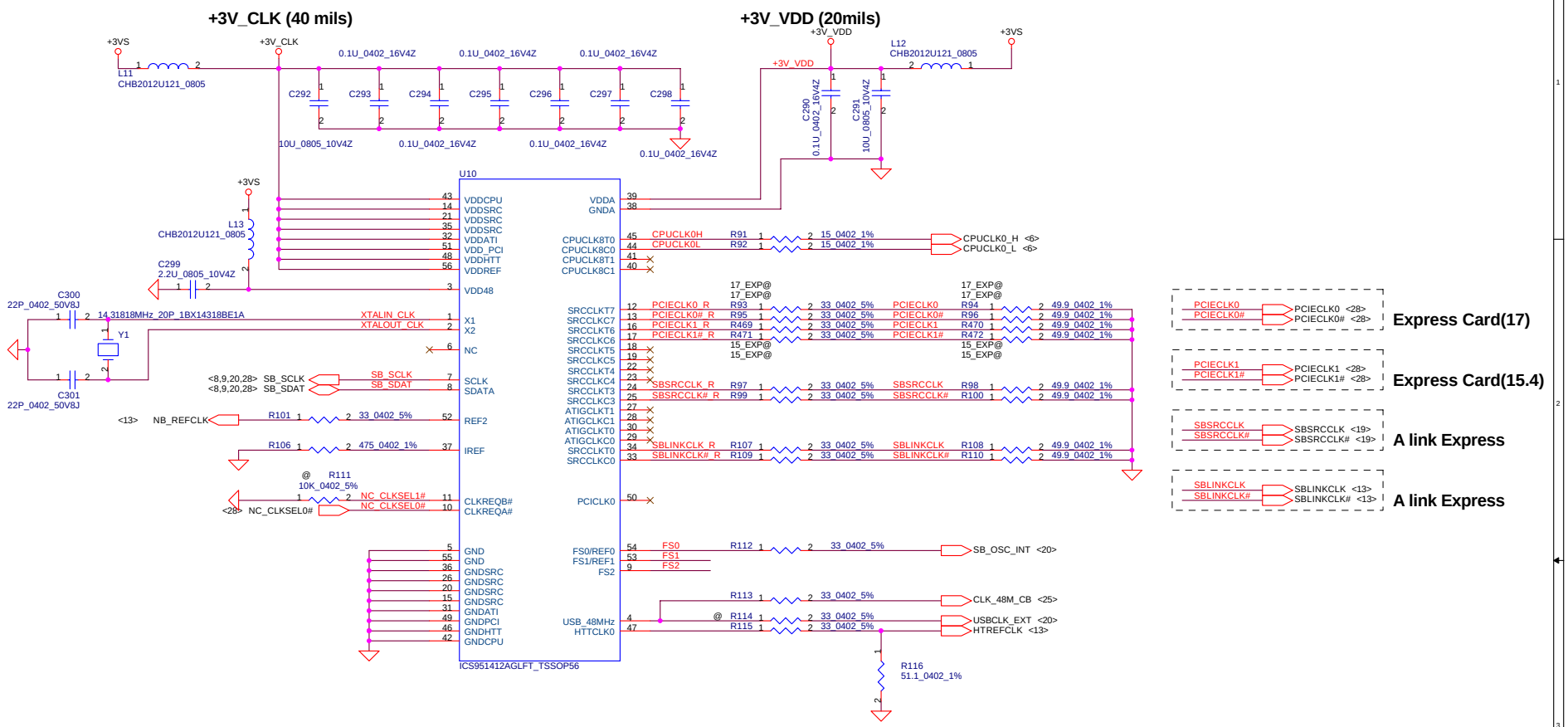

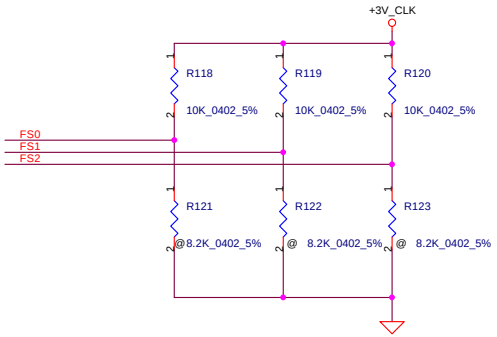

EXT CLK FREQUENCY SELECT TABLE(MHZ)

FS2	FS1	FS0	CPU	SRCCLK [2:1]	HTT	PCI	USB	COMMENT
0	0	0	Hi-Z	100.00	Hi-Z	Hi-Z	48.00	Reserved
0	0	1	X	100.00	X/3	X/6	48.00	Reserved
0	1	0	180.00	100.00	60.00	30.00	48.00	Reserved
0	1	1	220.00	100.00	36.56	73.12	48.00	Reserved
1	0	0	100.00	100.00	66.66	33.33	48.00	Reserved
1	0	1	133.33	100.00	66.66	33.33	48.00	Reserved
* 1	1	1	200.00	100.00	66.66	33.33	48.00	Normal HAMMER operation

Security Classification	Compal Secret Data		
Issued Date	2005/03/01	Deciphered Date	2005/04/06

THIS SHEET OF ENGINEERING DRAWING IS THE PROPRIETARY PROPERTY OF COMPAL ELECTRONICS, INC. AND CONTAINS CONFIDENTIAL AND TRADE SECRET INFORMATION. THIS SHEET MAY NOT BE TRANSFERED FROM THE CUSTODY OF THE COMPETENT DIVISION OF R&D DEPARTMENT EXCEPT AS AUTHORIZED BY COMPAL ELECTRONICS, INC. NEITHER THIS SHEET NOR THE INFORMATION IT CONTAINS MAY BE USED BY OR DISCLOSED TO ANY THIRD PARTY WITHOUT PRIOR WRITTEN CONSENT OF COMPAL ELECTRONICS, INC.

Compal Electronics, inc.

Title: SCHEMATIC, M/B LA-3181P

Size: Custom | Document Number: 401417 | Rev: B

Date: 星期三, 三月 08, 2006 | Sheet 16 of 54

LCD Panel & inverter Connector

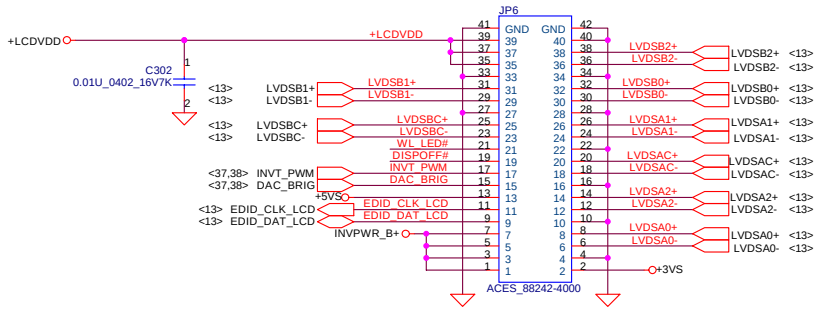

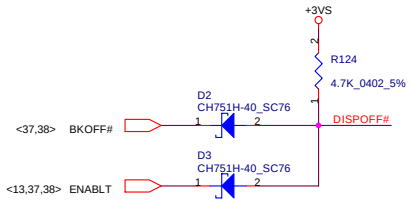

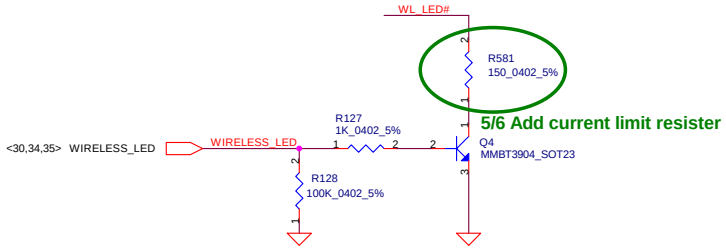

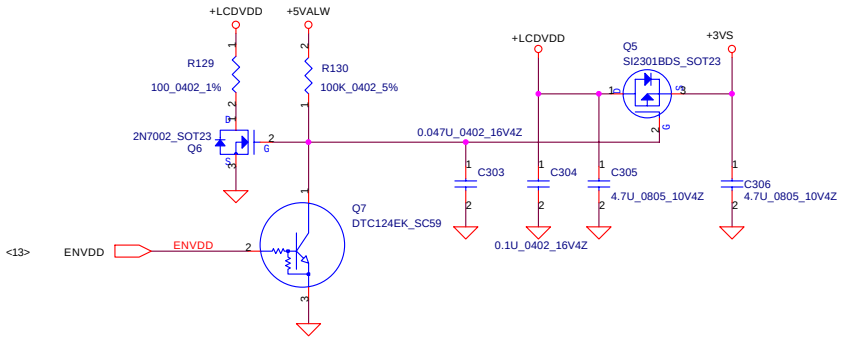

Security Classification	Compal Secret Data		
Issued Date	2005/03/01	Deciphered Date	2005/04/06

THIS SHEET OF ENGINEERING DRAWING IS THE PROPRIETARY PROPERTY OF COMPAL ELECTRONICS, INC. AND CONTAINS CONFIDENTIAL AND TRADE SECRET INFORMATION. THIS SHEET MAY NOT BE TRANSFERED FROM THE CUSTODY OF THE COMPETENT DIVISION OF R&D DEPARTMENT EXCEPT AS AUTHORIZED BY COMPAL ELECTRONICS, INC. NEITHER THIS SHEET NOR THE INFORMATION IT CONTAINS MAY BE USED BY OR DISCLOSED TO ANY THIRD PARTY WITHOUT PRIOR WRITTEN CONSENT OF COMPAL ELECTRONICS, INC.

Compal Electronics, inc.

Title: SCHEMATIC, M/B LA-3181P

Size: Custom | Document Number: 401417 | Rev: B

Date: 星期三, 三月 08, 2006 | Sheet 17 of 54

CRT CONNECTOR

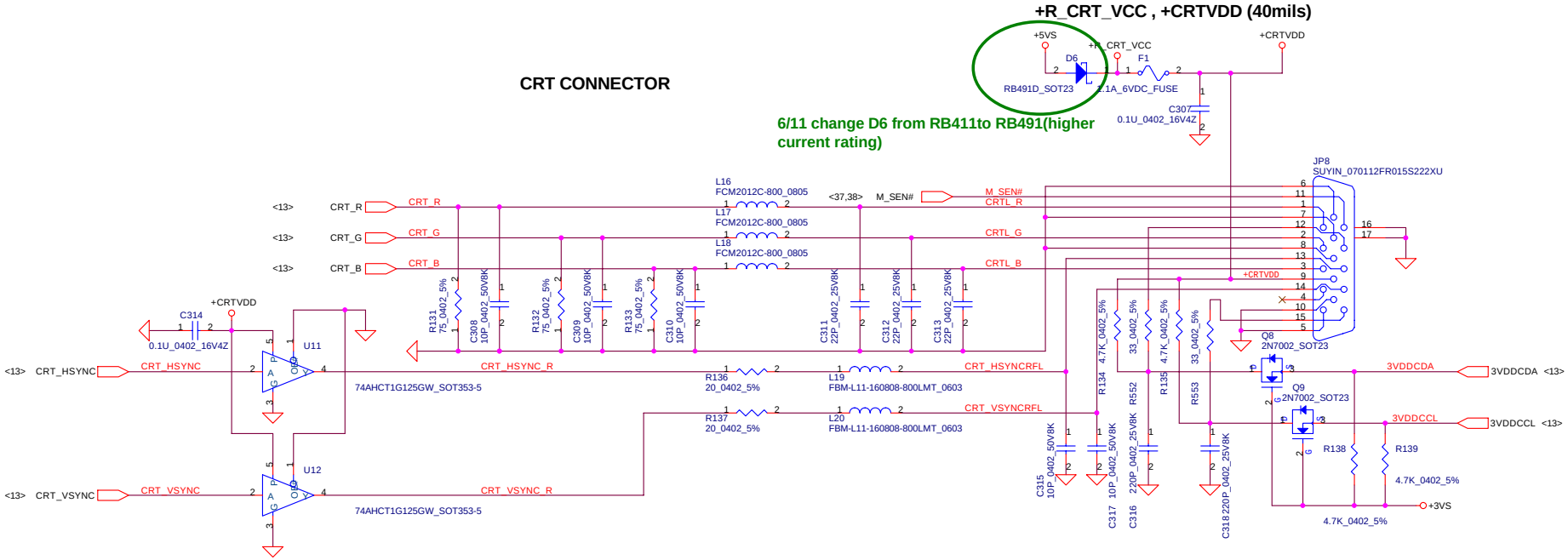

TV-Out Connector
S-Video

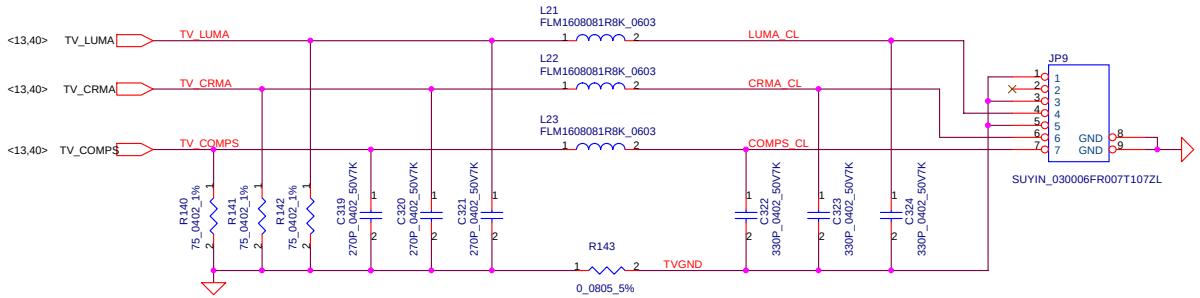

Security Classification	Compal Secret Data		
Issued Date	2005/03/01	Deciphered Date	2005/04/06

THIS SHEET OF ENGINEERING DRAWING IS THE PROPRIETARY PROPERTY OF COMPAL ELECTRONICS, INC. AND CONTAINS CONFIDENTIAL AND TRADE SECRET INFORMATION. THIS SHEET MAY NOT BE TRANSFERED FROM THE CUSTODY OF THE COMPETENT DIVISION OF R&D DEPARTMENT EXCEPT AS AUTHORIZED BY COMPAL ELECTRONICS, INC. NEITHER THIS SHEET NOR THE INFORMATION IT CONTAINS MAY BE USED BY OR DISCLOSED TO ANY THIRD PARTY WITHOUT PRIOR WRITTEN CONSENT OF COMPAL ELECTRONICS, INC.

Compal Electronics, inc.

Title: SCHEMATIC, M/B LA-3181P

Size: Custom | Document Number: 401417 | Rev: B

Date: 星期三, 三月 08, 2006 | Sheet 18 of 54

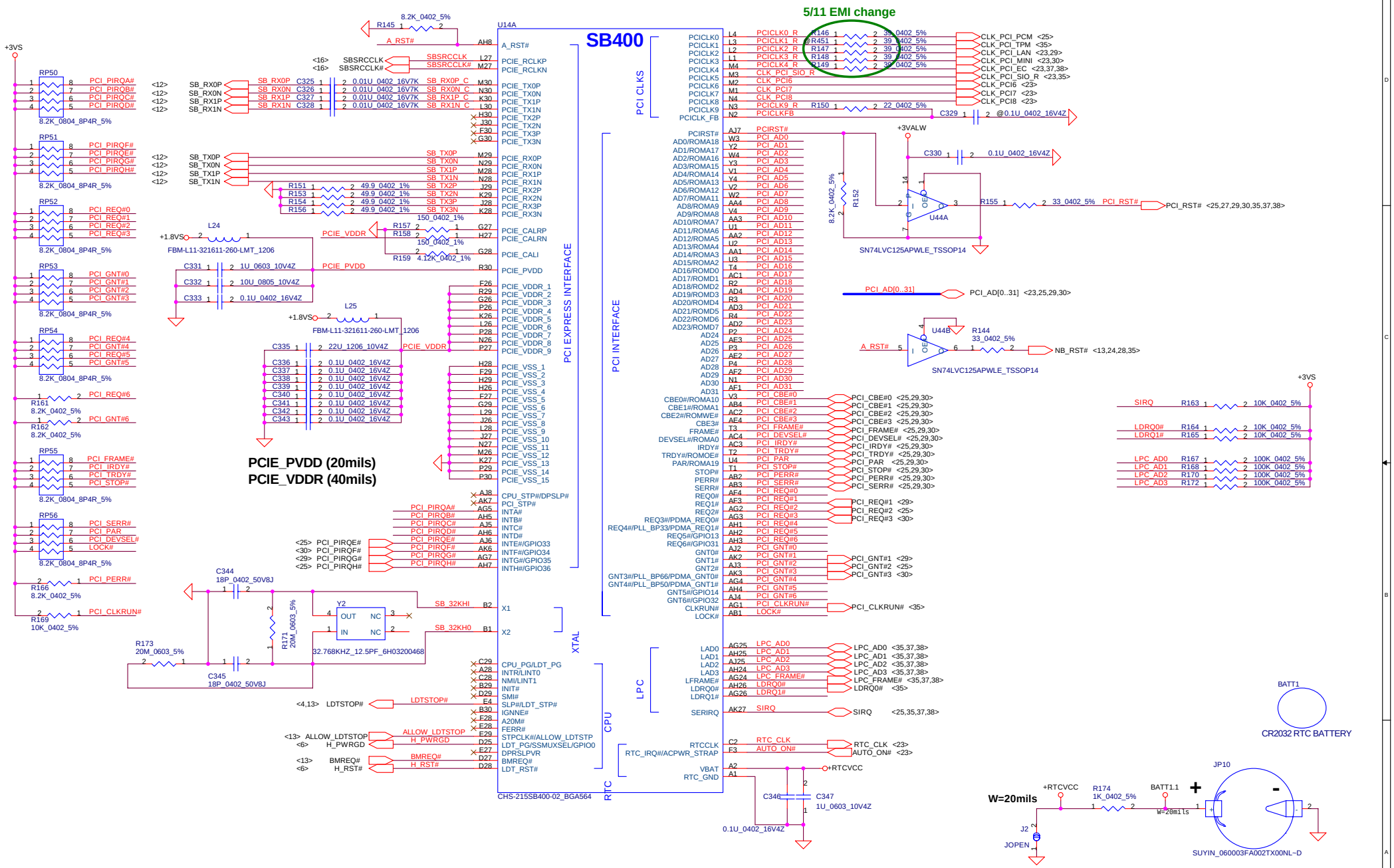

Security Classification	Compal Secret Data		
Issued Date	2005/03/01	Deciphered Date	2005/04/06

THIS SHEET OF ENGINEERING DRAWING IS THE PROPRIETARY PROPERTY OF COMPAL ELECTRONICS, INC. AND CONTAINS CONFIDENTIAL AND TRADE SECRET INFORMATION. THIS SHEET MAY NOT BE TRANSFERED FROM THE CUSTODY OF THE COMPETENT DIVISION OF R&D DEPARTMENT EXCEPT AS AUTHORIZED BY COMPAL ELECTRONICS, INC. NEITHER THIS SHEET NOR THE INFORMATION IT CONTAINS MAY BE USED BY OR DISCLOSED TO ANY THIRD PARTY WITHOUT PRIOR WRITTEN CONSENT OF COMPAL ELECTRONICS, INC.

Compal Electronics, inc.

Title: SCHEMATIC, M/B LA-3181P

Size: Custom | Document Number: 401417 | Rev: B

Date: 星期三, 三月 08, 2006 | Sheet 19 of 54

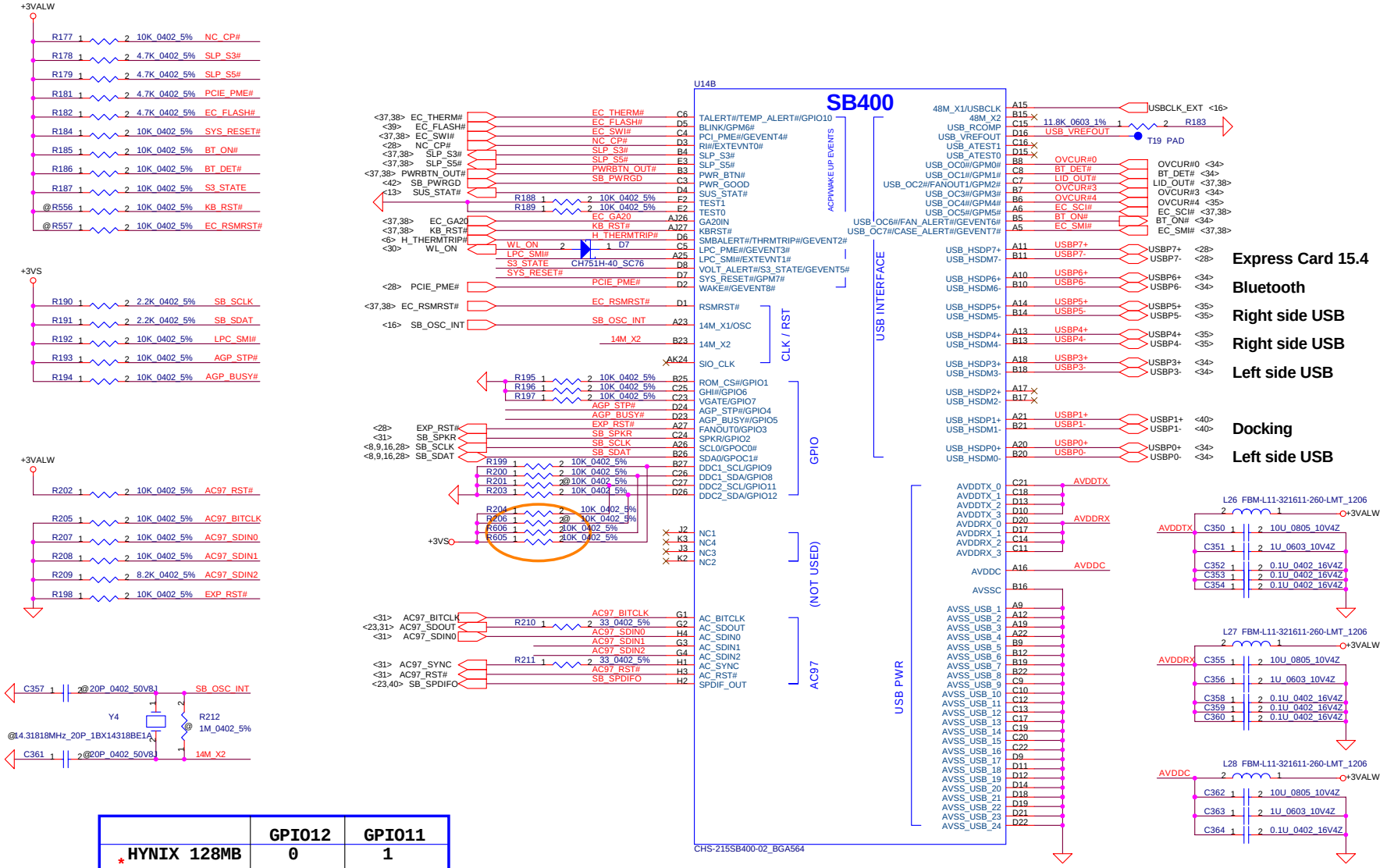

	GPIO12	GPIO11
* HYNIX 128MB	0	1
SAMSUMG 128MB	1	1
No VRAM	0	0
Reserved	1	0

GPIO8	0	Original Hynix VRAM
	1	New Hynix VRAM
GPIO8	0	Original Samsung VRAM
	1	New Samsung VRAM

Security Classification	Compal Secret Data		
Issued Date	2005/03/01	Deciphered Date	2005/04/06

THIS SHEET OF ENGINEERING DRAWING IS THE PROPRIETARY PROPERTY OF COMPAL ELECTRONICS, INC. AND CONTAINS CONFIDENTIAL AND TRADE SECRET INFORMATION. THIS SHEET MAY NOT BE TRANSFERED FROM THE CUSTODY OF THE COMPETENT DIVISION OF R&D DEPARTMENT EXCEPT AS AUTHORIZED BY COMPAL ELECTRONICS, INC. NEITHER THIS SHEET NOR THE INFORMATION IT CONTAINS MAY BE USED BY OR DISCLOSED TO ANY THIRD PARTY WITHOUT PRIOR WRITTEN CONSENT OF COMPAL ELECTRONICS, INC.

Compal Electronics, inc.

Title: SCHEMATIC, M/B LA-3181P

Size: Custom | Document Number: 401417 | Rev: B

Date: 星期三, 三月 08, 2006 | Sheet 20 of 54

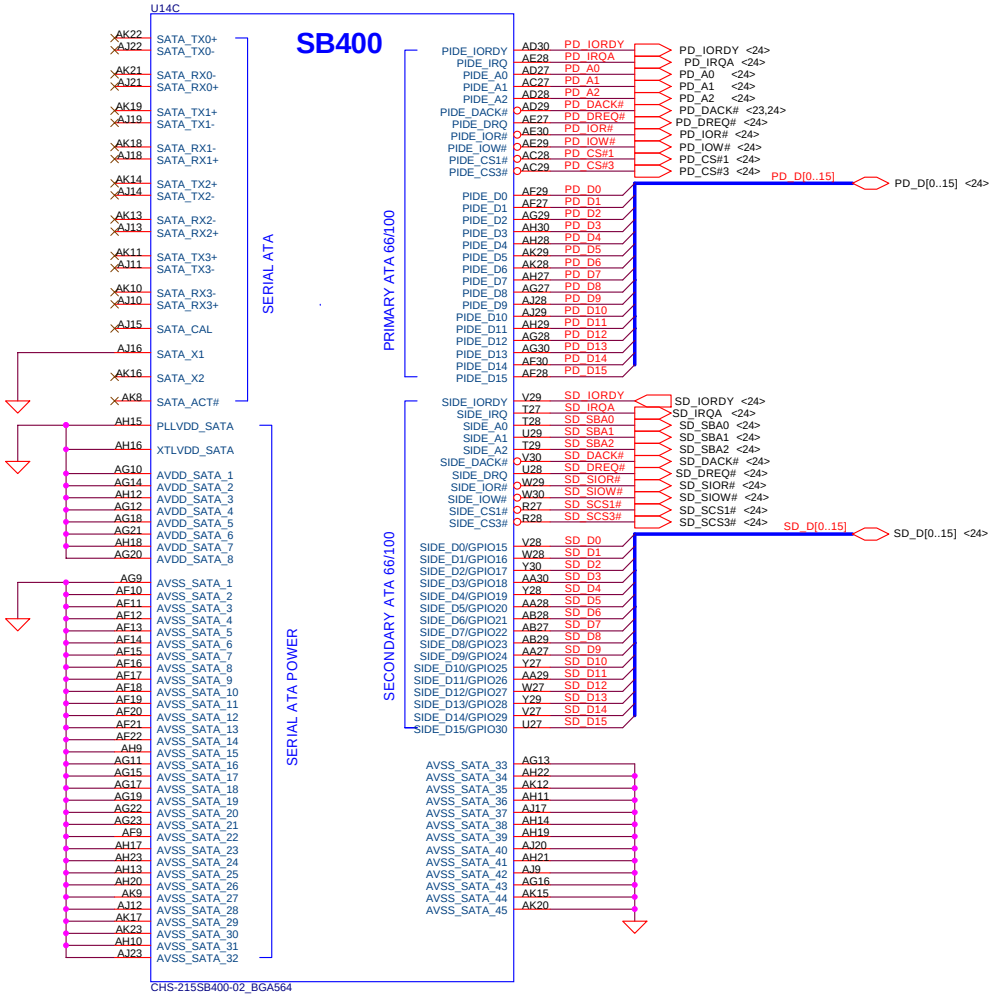

Security Classification	Compal Secret Data		
Issued Date	2005/03/01	Deciphered Date	2005/04/06

THIS SHEET OF ENGINEERING DRAWING IS THE PROPRIETARY PROPERTY OF COMPAL ELECTRONICS, INC. AND CONTAINS CONFIDENTIAL AND TRADE SECRET INFORMATION. THIS SHEET MAY NOT BE TRANSFERED FROM THE CUSTODY OF THE COMPETENT DIVISION OF R&D DEPARTMENT EXCEPT AS AUTHORIZED BY COMPAL ELECTRONICS, INC. NEITHER THIS SHEET NOR THE INFORMATION IT CONTAINS MAY BE USED BY OR DISCLOSED TO ANY THIRD PARTY WITHOUT PRIOR WRITTEN CONSENT OF COMPAL ELECTRONICS, INC.

Compal Electronics, inc.

Title: SCHEMATIC, M/B LA-3181P

Size: Custom | Document Number: 401417 | Rev: B

Date: 星期三, 三月 08, 2006 | Sheet 21 of 54

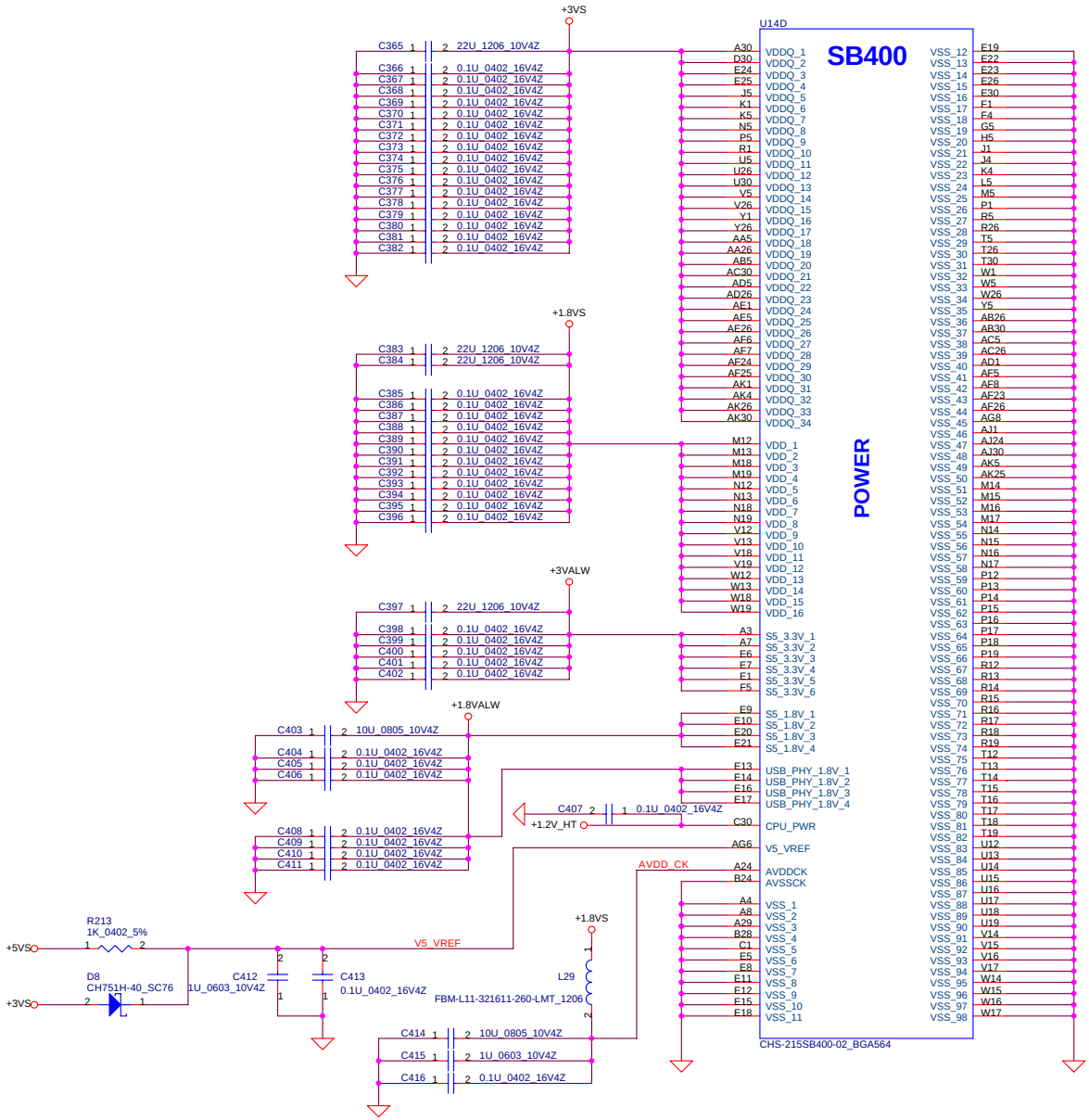

V5_VREF (20mils)
AVDD_CK(40mils)

Security Classification	Compal Secret Data		
Issued Date	2005/03/01	Deciphered Date	2005/04/06

THIS SHEET OF ENGINEERING DRAWING IS THE PROPRIETARY PROPERTY OF COMPAL ELECTRONICS, INC. AND CONTAINS CONFIDENTIAL AND TRADE SECRET INFORMATION. THIS SHEET MAY NOT BE TRANSFERED FROM THE CUSTODY OF THE COMPETENT DIVISION OF R&D DEPARTMENT EXCEPT AS AUTHORIZED BY COMPAL ELECTRONICS, INC. NEITHER THIS SHEET NOR THE INFORMATION IT CONTAINS MAY BE USED BY OR DISCLOSED TO ANY THIRD PARTY WITHOUT PRIOR WRITTEN CONSENT OF COMPAL ELECTRONICS, INC.

Compal Electronics, inc.

Title: **SCHEMATIC, M/B LA-3181P**

Size: Custom | Document Number: **401417** | Rev: B

Date: 星期三, 三月 08, 2006 | Sheet 22 of 54

REQUIRED STRAPS

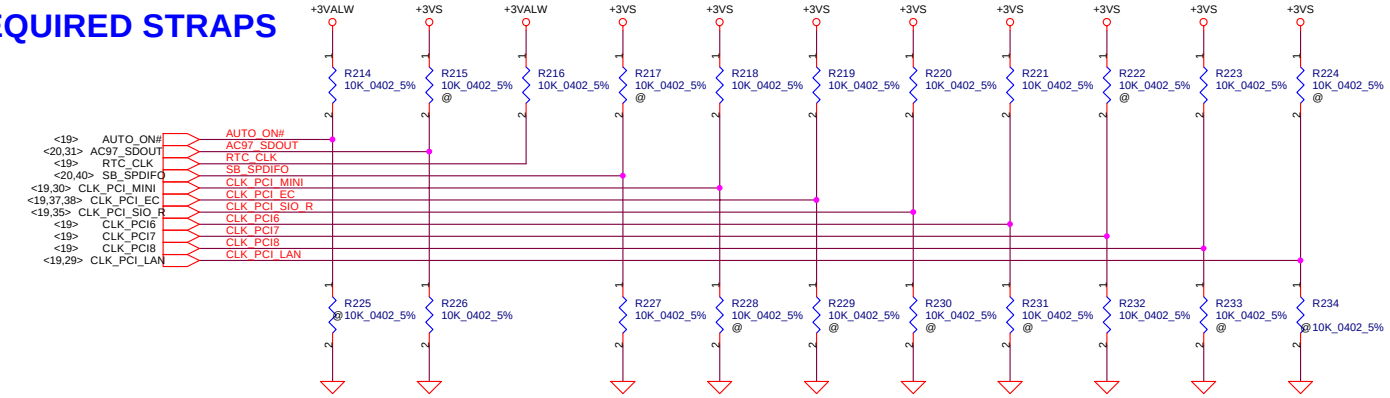

ACPWRON

	AUTO_ON#	AC97_SDOUT	RTC_CLK	SB_SPDIFO	CLK_PCI_LAN (PCI_CLK2)	CLK_PCI_MINI (PCI_CLK3)	CLK_PCI_EC (PCI_CLK4)	CLK_PCI_SIO (PCI_CLK5)	CLK_PCI6	CLK_PCI7 PCI_CLK8
PULL HIGH	MANUAL PWR ON DEFAULT	USE DEBUG STRAPS	INTERNAL RTC DEFAULT	SIO 24MHz	48MHz OSC MODE	USB PHY PWRDOWN DISABLE DEFAULT	INTERNAL 48MHz DEFAULT	PCIE_CM_SET LOW DEFAULT	CPU I/F = K8 DEFAULT	ROM TYPE H,H = PCI ROM H,L = PMC LPC ROM L,H = NORMAL LPC ROM DEFAULT L,L = FWH ROM
PULL LOW	AUTO PWR ON	IGNORE DEBUG STRAPS DEFAULT	EXTERNAL RTC (NOT SUPPORTED W/ IT8712)	SIO 48MHz DEFAULT	48MHz XTAL MODE	USB PHY PWRDOWN ENABLE	EXTERNAL 48MHz	PCIE_CM_SET High	CPU I/F = P4	

DEBUG STRAPS

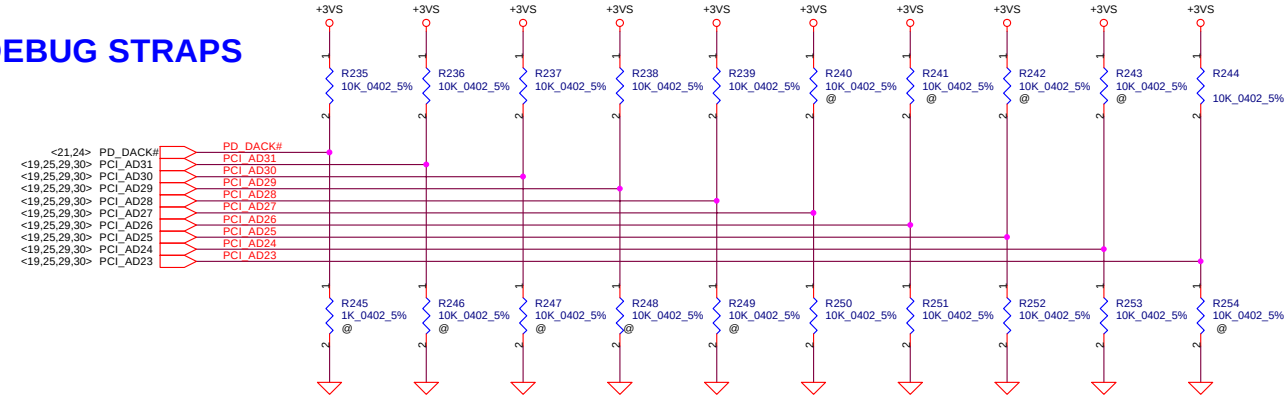

	PD_DACK#	PCI_AD31	PCI_AD30	PCI_AD29	PCI_AD28	PCI_AD27	PCI_AD26	PCI_AD25	PCI_AD24	PCI_AD23
PULL HIGH	USE LONG RESET DEFAULT	RESERVED	RESERVED	RESERVED	RESERVED	BYPASS PCI PLL	BYPASS ACPI BCLK	BYPASS IDE PLL	USE EEPROM PCIE STRAPS	RESERVED
PULL LOW	USE SHORT RESET					USE PCI PLL DEFAULT	USE ACPI BCLK DEFAULT	USE IDE PLL DEFAULT	USE DEFAULT PCIE STRAPS DEFAULT	

Security Classification	Compal Secret Data		
Issued Date	2005/03/01	Deciphered Date	2005/04/06

THIS SHEET OF ENGINEERING DRAWING IS THE PROPRIETARY PROPERTY OF COMPAL ELECTRONICS, INC. AND CONTAINS CONFIDENTIAL AND TRADE SECRET INFORMATION. THIS SHEET MAY NOT BE TRANSFERED FROM THE CUSTODY OF THE COMPETENT DIVISION OF R&D DEPARTMENT EXCEPT AS AUTHORIZED BY COMPAL ELECTRONICS, INC. NEITHER THIS SHEET NOR THE INFORMATION IT CONTAINS MAY BE USED BY OR DISCLOSED TO ANY THIRD PARTY WITHOUT PRIOR WRITTEN CONSENT OF COMPAL ELECTRONICS, INC.

Compal Electronics, inc.

Title: SCHEMATIC, M/B LA-3181P

Size: Custom | Document Number: 401417 | Rev: B

Date: 星期三, 三月 08, 2006 | Sheet 23 of 54

Main HDD

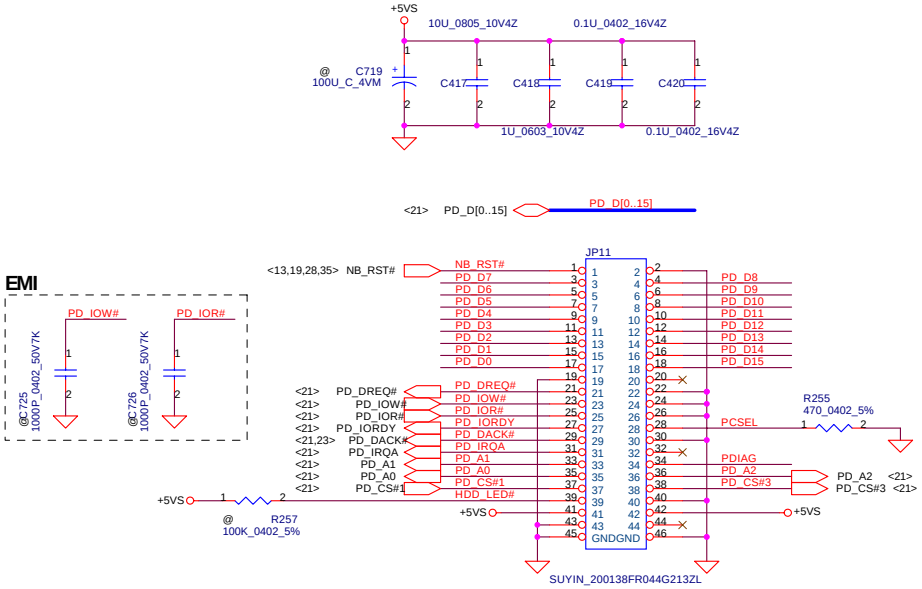

Second HDD

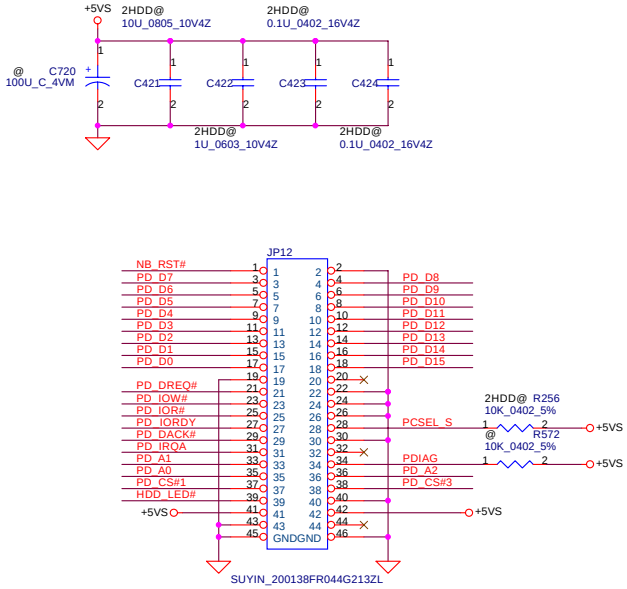

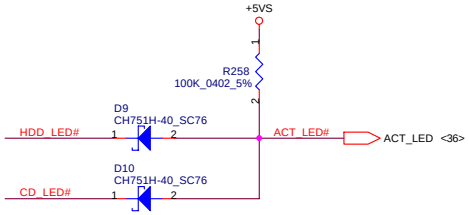

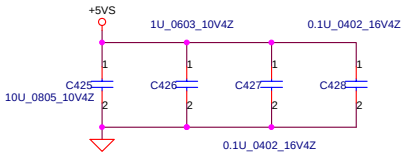

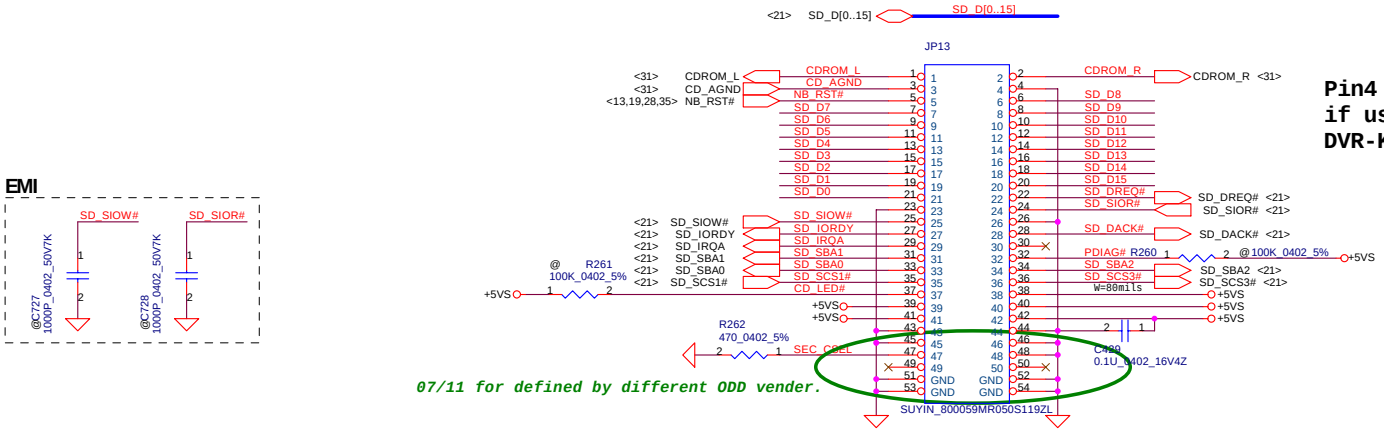

Pin4 of CD_ROM connector is NC if use Pioneer ODD(DVD Dual DVR-K12TBC/DVR-K13TBC)

07/11 for defined by different ODD vender.

Security Classification	Compal Secret Data		
Issued Date	2005/03/01	Deciphered Date	2005/04/06

THIS SHEET OF ENGINEERING DRAWING IS THE PROPRIETARY PROPERTY OF COMPAL ELECTRONICS, INC. AND CONTAINS CONFIDENTIAL AND TRADE SECRET INFORMATION. THIS SHEET MAY NOT BE TRANSFERED FROM THE CUSTODY OF THE COMPETENT DIVISION OF R&D DEPARTMENT EXCEPT AS AUTHORIZED BY COMPAL ELECTRONICS, INC. NEITHER THIS SHEET NOR THE INFORMATION IT CONTAINS MAY BE USED BY OR DISCLOSED TO ANY THIRD PARTY WITHOUT PRIOR WRITTEN CONSENT OF COMPAL ELECTRONICS, INC.

Compal Electronics, Inc.

Title: SCHEMATIC, M/B LA-3181P

Size: Custom | Document Number: 401417 | Rev: B

Date: 星期三, 三月 08, 2006 | Sheet 24 of 54

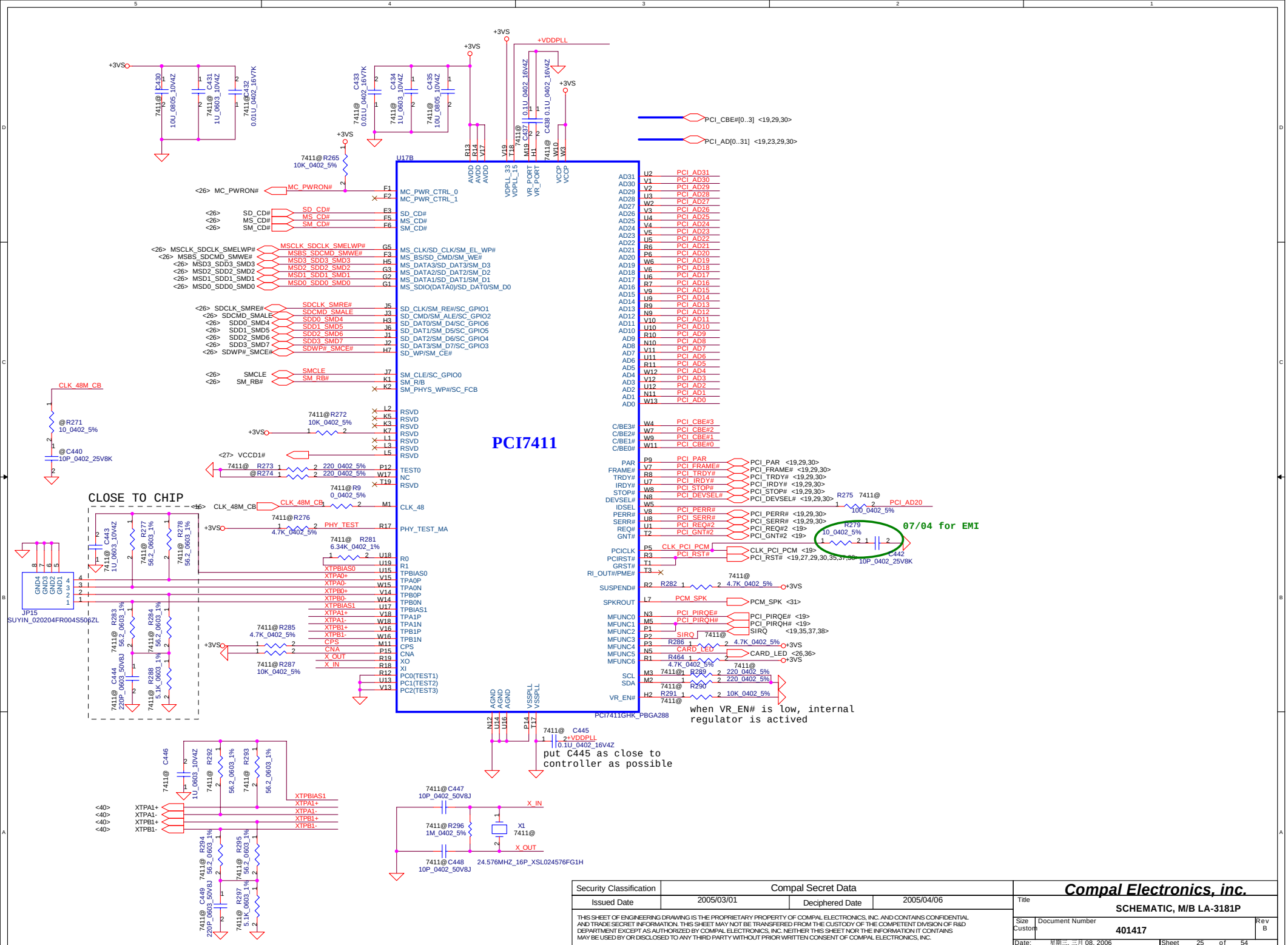

Security Classification	Compal Secret Data		
Issued Date	2005/03/01	Deciphered Date	2005/04/06

THIS SHEET OF ENGINEERING DRAWING IS THE PROPRIETARY PROPERTY OF COMPAL ELECTRONICS, INC. AND CONTAINS CONFIDENTIAL AND TRADE SECRET INFORMATION. THIS SHEET MAY NOT BE TRANSFERED FROM THE CUSTODY OF THE COMPETENT DIVISION OF R&D DEPARTMENT EXCEPT AS AUTHORIZED BY COMPAL ELECTRONICS, INC. NEITHER THIS SHEET NOR THE INFORMATION IT CONTAINS MAY BE USED BY OR DISCLOSED TO ANY THIRD PARTY WITHOUT PRIOR WRITTEN CONSENT OF COMPAL ELECTRONICS, INC.

Compal Electronics, Inc.

Title: SCHEMATIC, M/B LA-3181P

Size: Custom | Document Number: 401417 | Rev: B

Date: 星期三, 三月 08, 2006 | Sheet 25 of 54

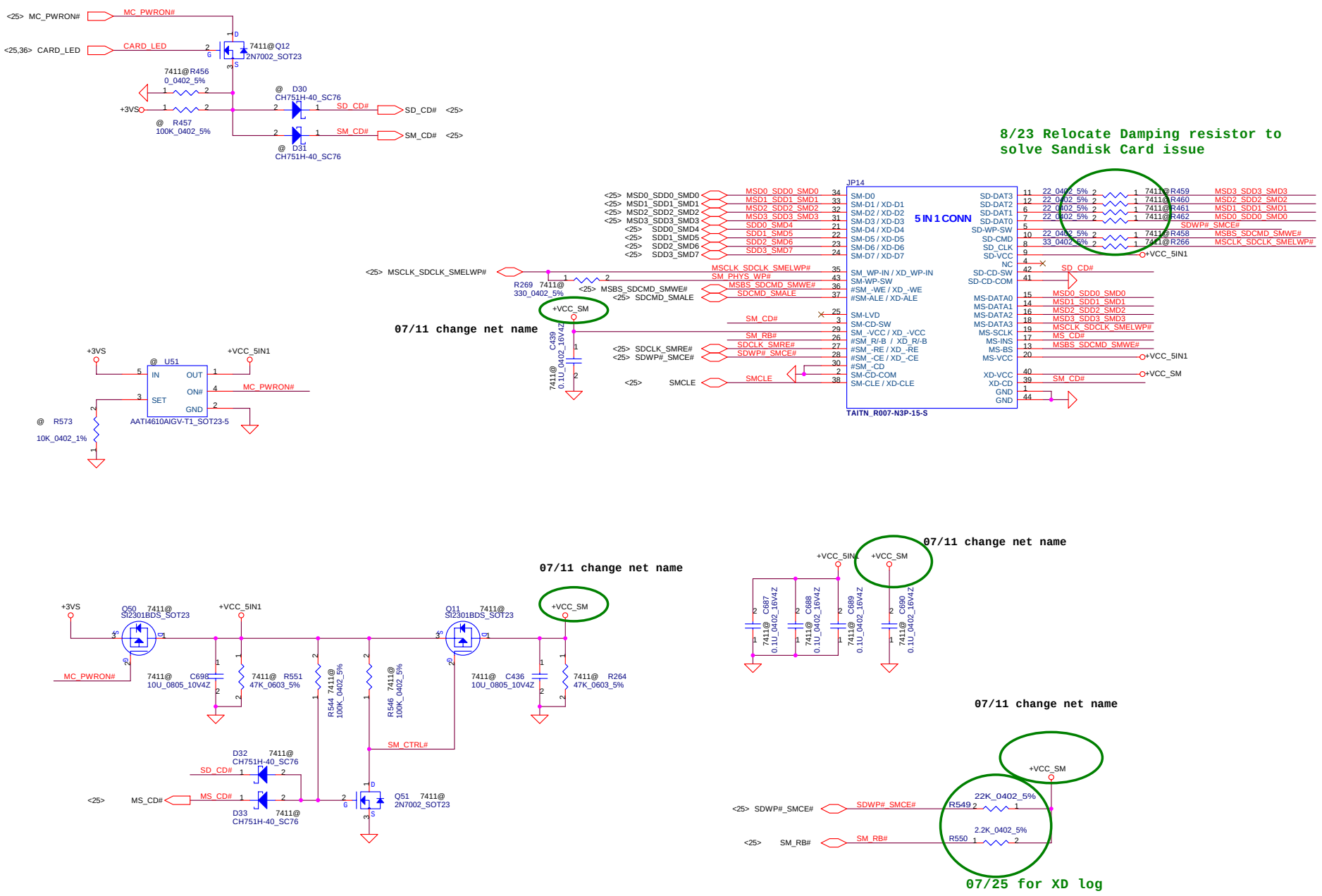

Security Classification	Compal Secret Data		
Issued Date	2005/03/01	Deciphered Date	2005/04/06

THIS SHEET OF ENGINEERING DRAWING IS THE PROPRIETARY PROPERTY OF COMPAL ELECTRONICS, INC. AND CONTAINS CONFIDENTIAL AND TRADE SECRET INFORMATION. THIS SHEET MAY NOT BE TRANSFERED FROM THE CUSTODY OF THE COMPETENT DIVISION OF R&D DEPARTMENT EXCEPT AS AUTHORIZED BY COMPAL ELECTRONICS, INC. NEITHER THIS SHEET NOR THE INFORMATION IT CONTAINS MAY BE USED BY OR DISCLOSED TO ANY THIRD PARTY WITHOUT PRIOR WRITTEN CONSENT OF COMPAL ELECTRONICS, INC.

Compal Electronics, inc.

Title: SCHEMATIC, M/B LA-3181P

Size: Custom | Document Number: 401417 | Rev: B

Date: 星期三, 三月 08, 2006 | Sheet 26 of 54

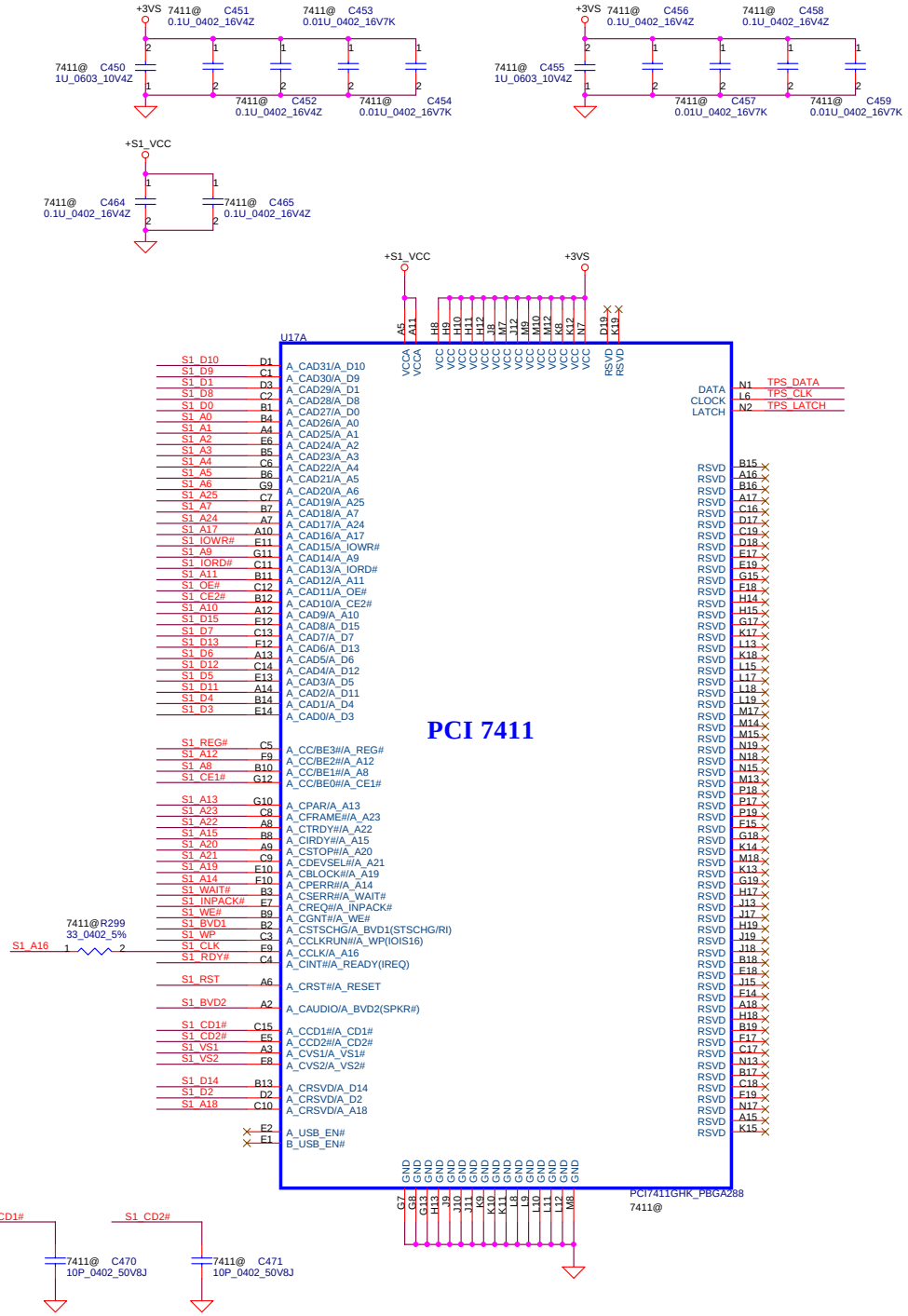

CardBus Power Switch

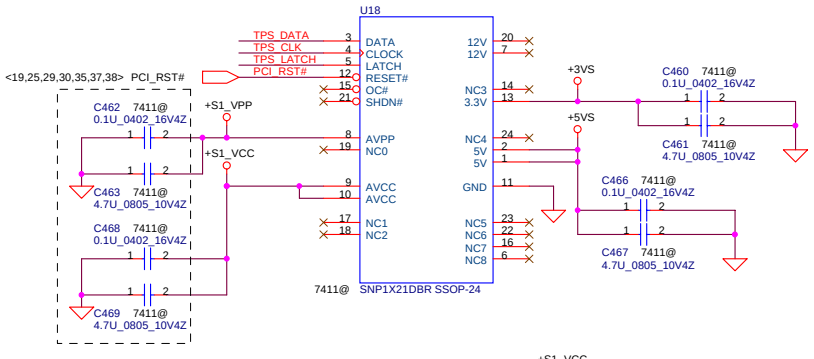

close to card bus conn

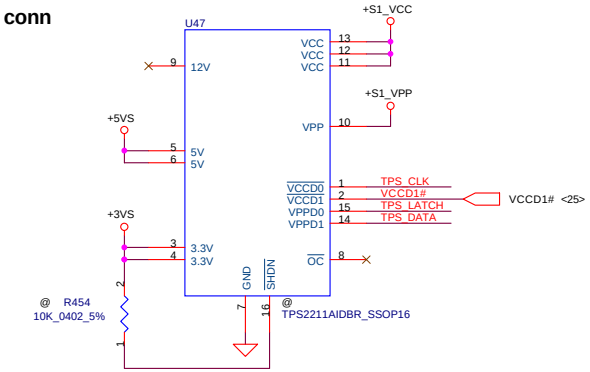

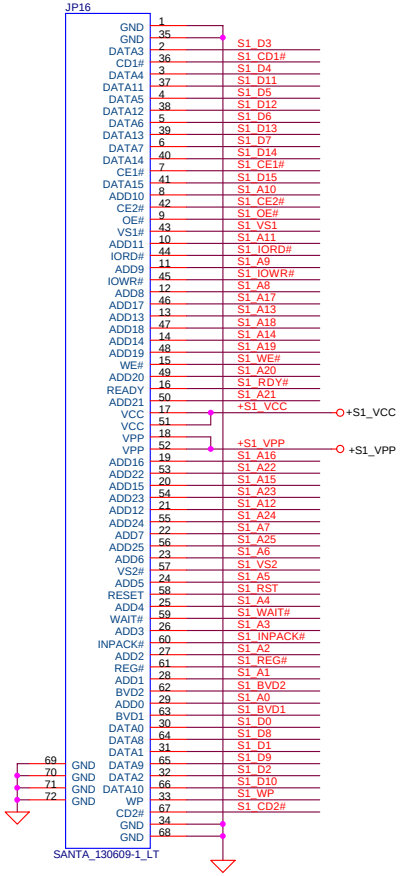

Security Classification	Compal Secret Data		
Issued Date	2005/03/01	Deciphered Date	2005/04/06

THIS SHEET OF ENGINEERING DRAWING IS THE PROPRIETARY PROPERTY OF COMPAL ELECTRONICS, INC. AND CONTAINS CONFIDENTIAL AND TRADE SECRET INFORMATION. THIS SHEET MAY NOT BE TRANSFERED FROM THE CUSTODY OF THE COMPETENT DIVISION OF R&D DEPARTMENT EXCEPT AS AUTHORIZED BY COMPAL ELECTRONICS, INC. NEITHER THIS SHEET NOR THE INFORMATION IT CONTAINS MAY BE USED BY OR DISCLOSED TO ANY THIRD PARTY WITHOUT PRIOR WRITTEN CONSENT OF COMPAL ELECTRONICS, INC.

Compal Electronics, Inc.

Title: SCHEMATIC, M/B LA-3181P

Size: Custom | Document Number: 401417 | Rev: B

Date: 星期三, 三月 08, 2006 | Sheet 27 of 54

Express Card Power Switch

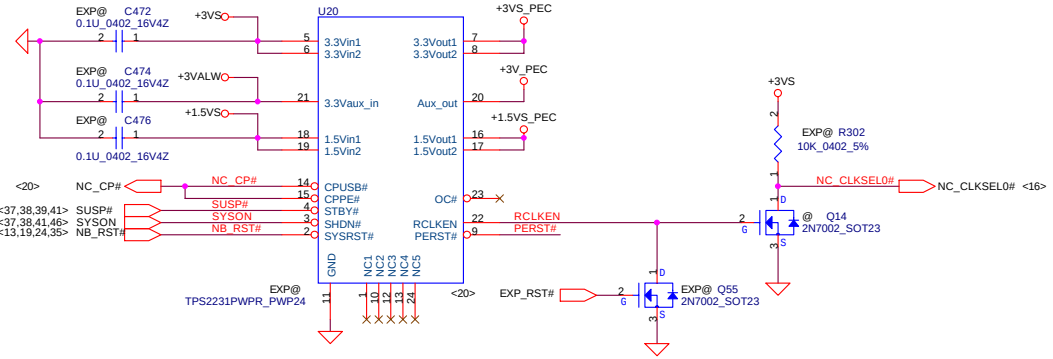

close to JP36

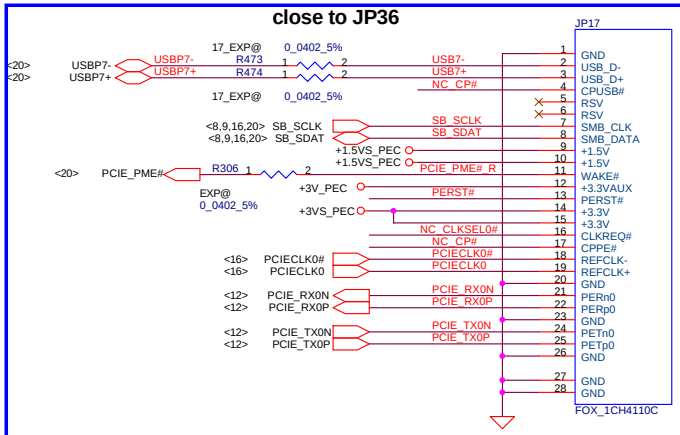

Near to Express Card slot. 17

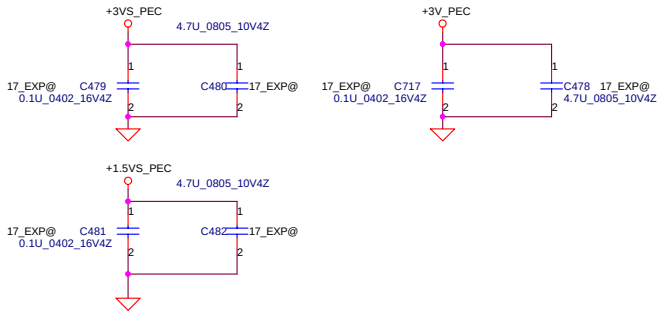

close to JP36

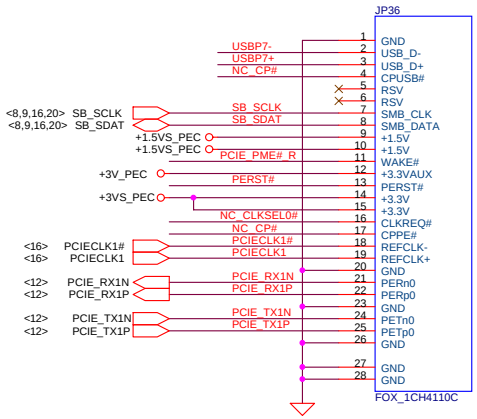

Near to Express Card slot. 15.4

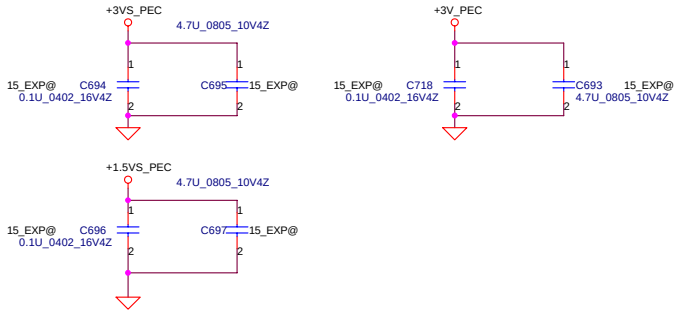

Security Classification	Compal Secret Data		
Issued Date	2005/03/01	Deciphered Date	2005/04/06

THIS SHEET OF ENGINEERING DRAWING IS THE PROPRIETARY PROPERTY OF COMPAL ELECTRONICS, INC. AND CONTAINS CONFIDENTIAL AND TRADE SECRET INFORMATION. THIS SHEET MAY NOT BE TRANSFERED FROM THE CUSTODY OF THE COMPETENT DIVISION OF R&D DEPARTMENT EXCEPT AS AUTHORIZED BY COMPAL ELECTRONICS, INC. NEITHER THIS SHEET NOR THE INFORMATION IT CONTAINS MAY BE USED BY OR DISCLOSED TO ANY THIRD PARTY WITHOUT PRIOR WRITTEN CONSENT OF COMPAL ELECTRONICS, INC.

Compal Electronics, inc.

Title: SCHEMATIC, M/B LA-3181P

Size: Custom | Document Number: 401417 | Rev: B

Date: 星期三, 三月 08, 2006 | Sheet 28 of 54

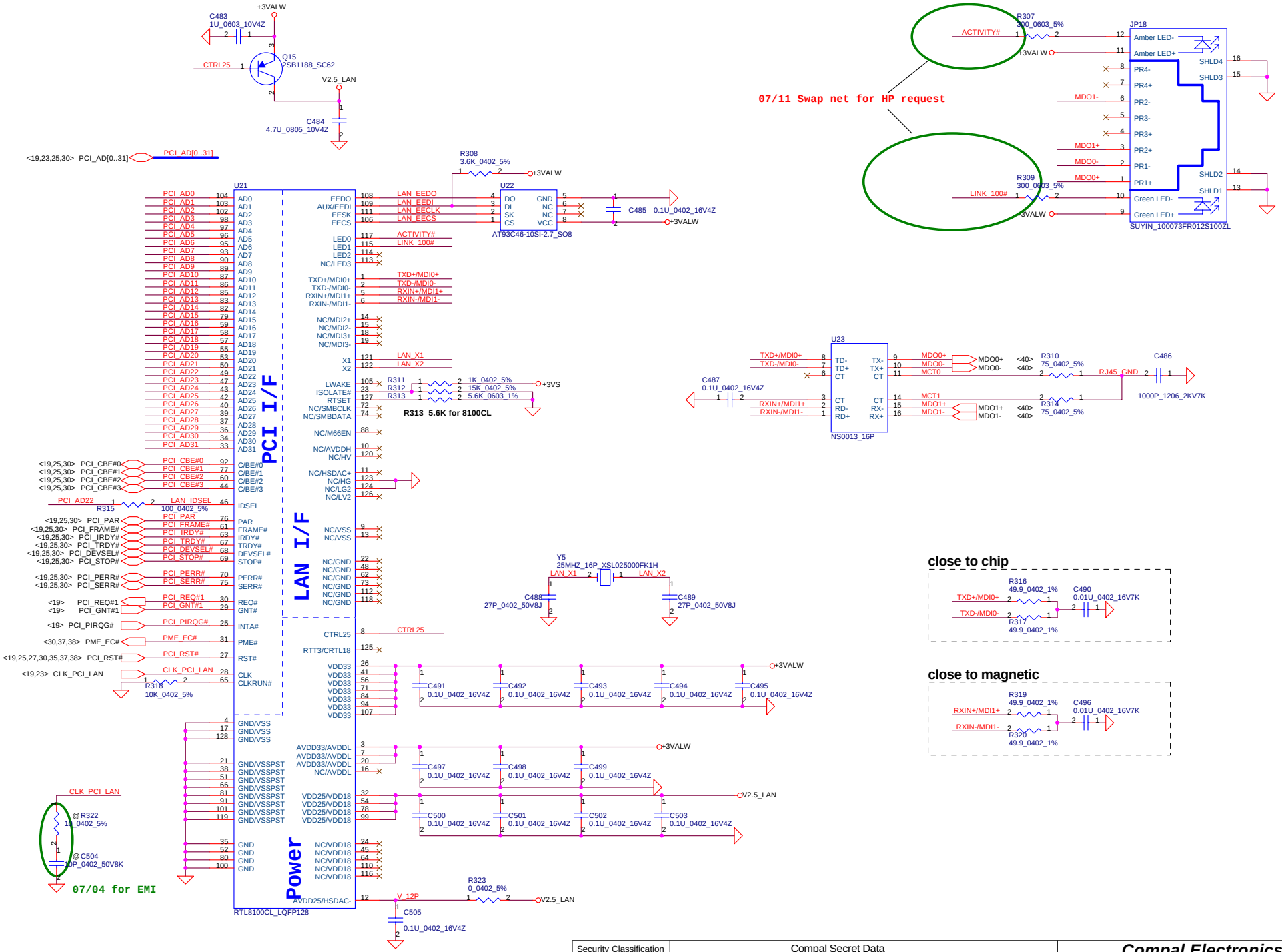

Security Classification	Compal Secret Data		
Issued Date	2005/03/01	Deciphered Date	2005/04/06

THIS SHEET OF ENGINEERING DRAWING IS THE PROPRIETARY PROPERTY OF COMPAL ELECTRONICS, INC. AND CONTAINS CONFIDENTIAL AND TRADE SECRET INFORMATION. THIS SHEET MAY NOT BE TRANSFERED FROM THE CUSTODY OF THE COMPETENT DIVISION OF R&D DEPARTMENT EXCEPT AS AUTHORIZED BY COMPAL ELECTRONICS, INC. NEITHER THIS SHEET NOR THE INFORMATION IT CONTAINS MAY BE USED BY OR DISCLOSED TO ANY THIRD PARTY WITHOUT PRIOR WRITTEN CONSENT OF COMPAL ELECTRONICS, INC.

Compal Electronics, inc.

Title: SCHEMATIC, M/B LA-3181P

Size: Custom | Document Number: 401417 | Rev: B

Date: 星期三, 三月 08, 2006 | Sheet 29 of 54

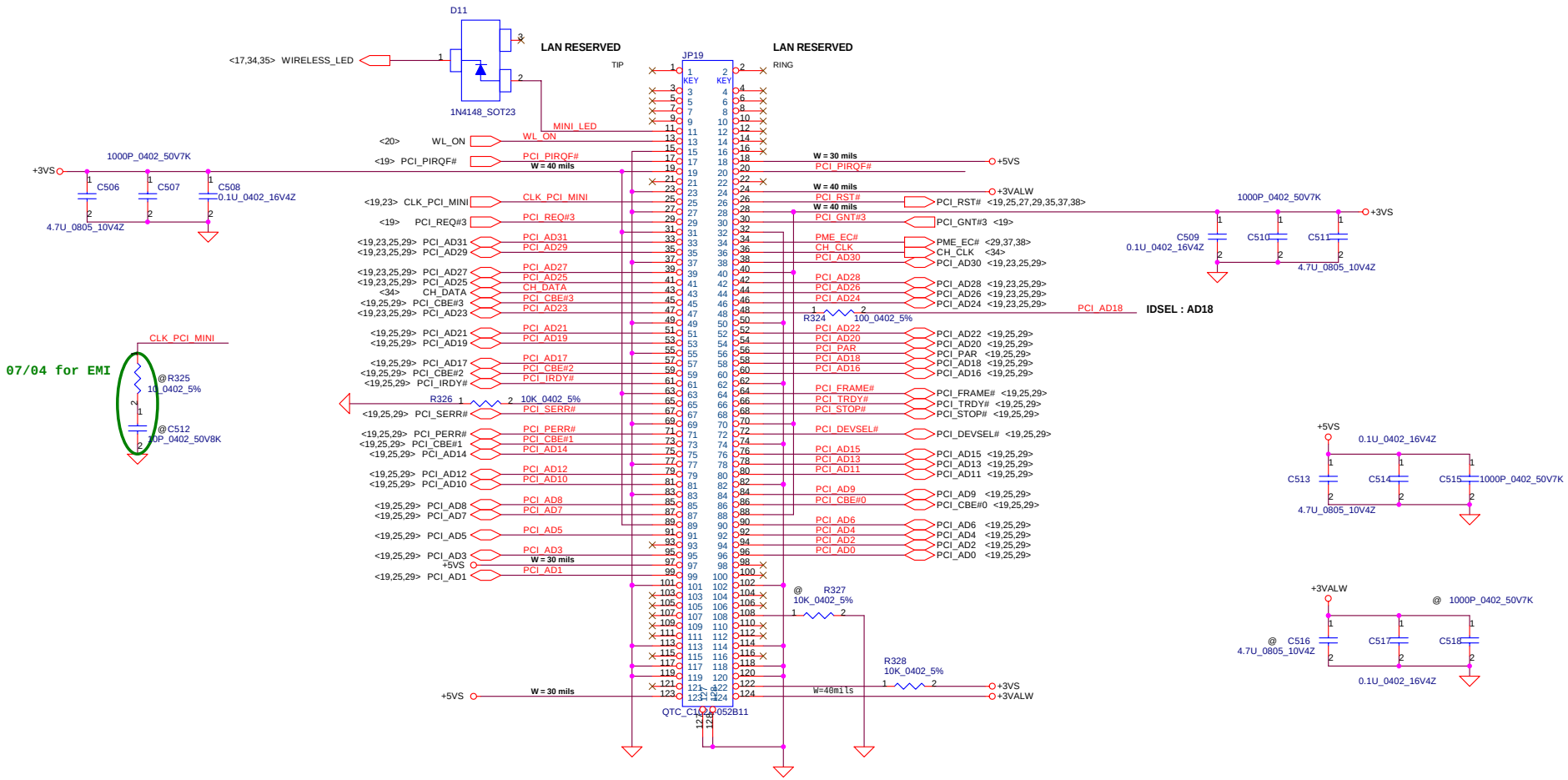

Security Classification	Compal Secret Data		
Issued Date	2005/03/01	Deciphered Date	2005/04/06

THIS SHEET OF ENGINEERING DRAWING IS THE PROPRIETARY PROPERTY OF COMPAL ELECTRONICS, INC. AND CONTAINS CONFIDENTIAL AND TRADE SECRET INFORMATION. THIS SHEET MAY NOT BE TRANSFERED FROM THE CUSTODY OF THE COMPETENT DIVISION OF R&D DEPARTMENT EXCEPT AS AUTHORIZED BY COMPAL ELECTRONICS, INC. NEITHER THIS SHEET NOR THE INFORMATION IT CONTAINS MAY BE USED BY OR DISCLOSED TO ANY THIRD PARTY WITHOUT PRIOR WRITTEN CONSENT OF COMPAL ELECTRONICS, INC.

Compal Electronics, inc.

Title: SCHEMATIC, M/B LA-3181P

Size: Custom | Document Number: 401417 | Rev: B

Date: 星期三, 三月 08, 2006 | Sheet 30 of 54

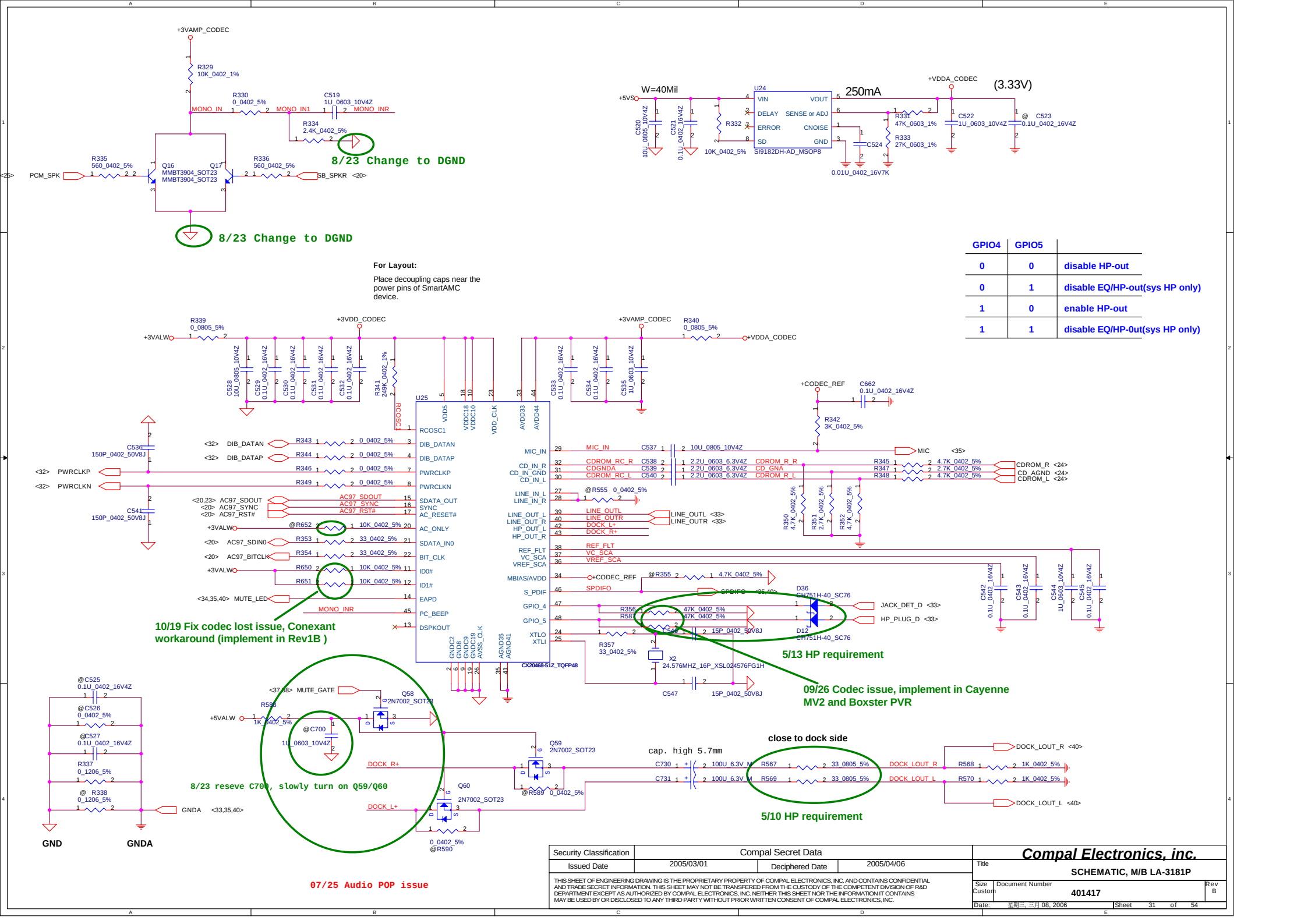

GPIO4	GPIO5	
0	0	disable HP-out
0	1	disable EQ/HP-out(sys HP only)
1	0	enable HP-out
1	1	disable EQ/HP-0ut(sys HP only)

Security Classification	Compal Secret Data		
Issued Date	2005/03/01	Deciphered Date	2005/04/06

THIS SHEET OF ENGINEERING DRAWING IS THE PROPRIETARY PROPERTY OF COMPAL ELECTRONICS, INC. AND CONTAINS CONFIDENTIAL AND TRADE SECRET INFORMATION. THIS SHEET MAY NOT BE TRANSFERED FROM THE CUSTODY OF THE COMPETENT DIVISION OF R&D DEPARTMENT EXCEPT AS AUTHORIZED BY COMPAL ELECTRONICS, INC. NEITHER THIS SHEET NOR THE INFORMATION IT CONTAINS MAY BE USED BY OR DISCLOSED TO ANY THIRD PARTY WITHOUT PRIOR WRITTEN CONSENT OF COMPAL ELECTRONICS, INC.

Compal Electronics, Inc.

Title: SCHEMATIC, M/B LA-3181P

Size: Custom | Document Number: 401417 | Rev: B

Date: 星期三, 三月 08, 2006 | Sheet 31 of 54

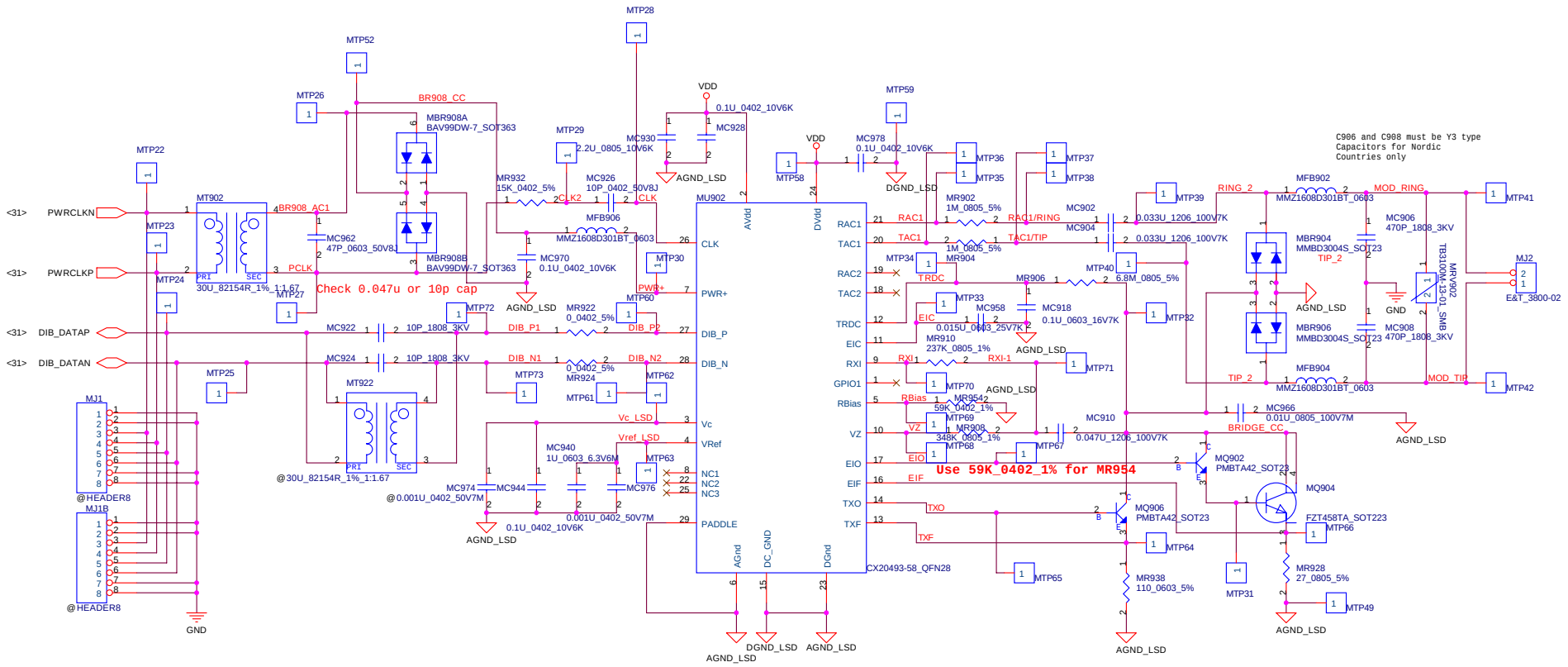

Security Classification	Compal Secret Data		
Issued Date	2005/03/01	Deciphered Date	2005/04/06

THIS SHEET OF ENGINEERING DRAWING IS THE PROPRIETARY PROPERTY OF COMPAL ELECTRONICS, INC. AND CONTAINS CONFIDENTIAL AND TRADE SECRET INFORMATION. THIS SHEET MAY NOT BE TRANSFERED FROM THE CUSTODY OF THE COMPETENT DIVISION OF R&D DEPARTMENT EXCEPT AS AUTHORIZED BY COMPAL ELECTRONICS, INC. NEITHER THIS SHEET NOR THE INFORMATION IT CONTAINS MAY BE USED BY OR DISCLOSED TO ANY THIRD PARTY WITHOUT PRIOR WRITTEN CONSENT OF COMPAL ELECTRONICS, INC.

Compal Electronics, inc.

Title: **SCHEMATIC, M/B LA-3181P**

Size: Custom | Document Number: **401417** | Rev: B

Date: 星期三, 三月 08, 2006 | Sheet 32 of 54

HEADPHONE OUT/LINE OUT

Gain Settings			
GAIN0	GAIN1	SE/BTL#	Av(inv)
0	0	0	6 dB
0	1	0	* 10 dB
1	0	0	15.6 dB
1	1	0	21.6 dB
X	X	1	4.1 dB

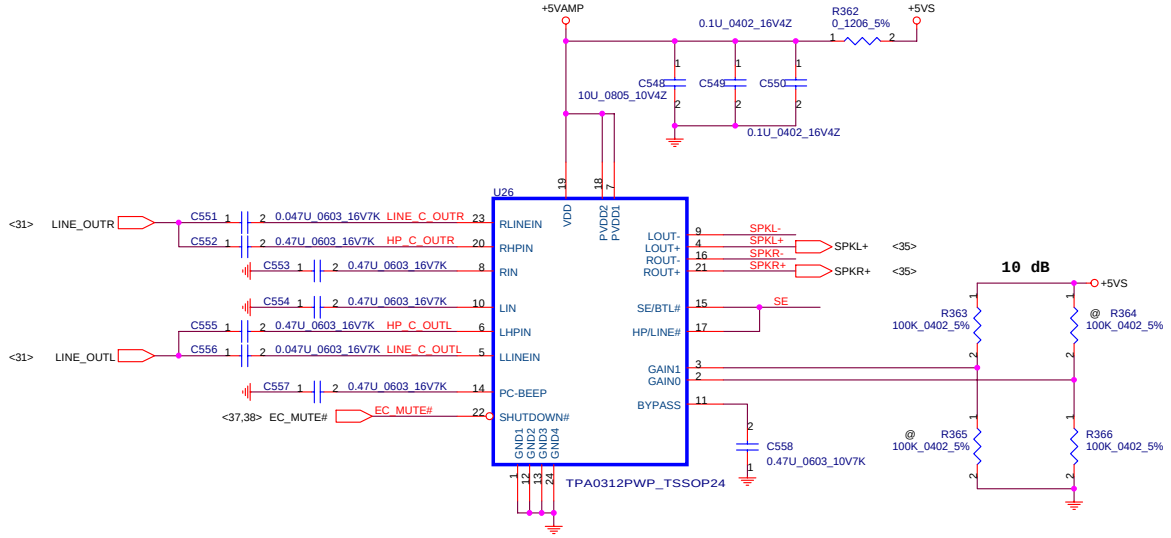

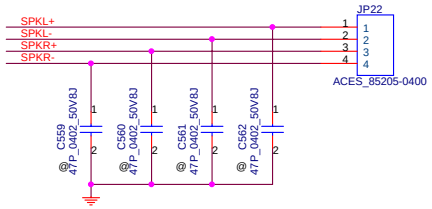

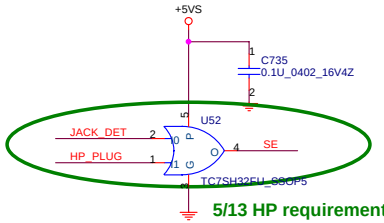

5/13 HP requirement

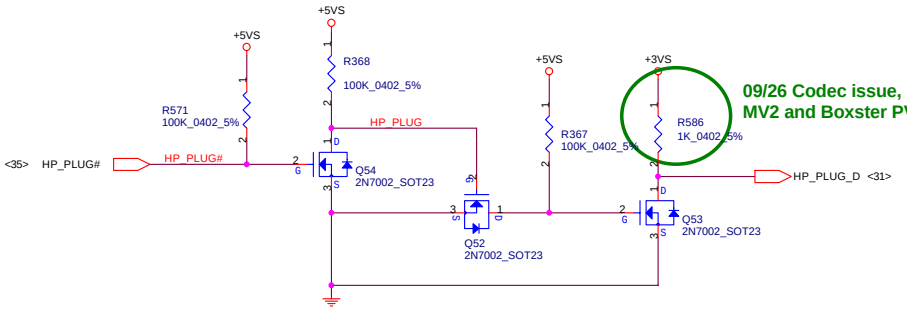

09/26 Codec issue, implement in Cayenne MV2 and Boxster PVR

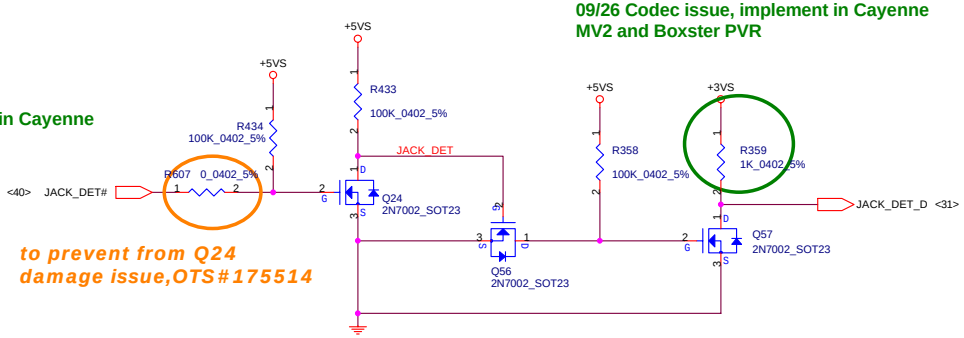

09/26 Codec issue, implement in Cayenne MV2 and Boxster PVR

to prevent from Q24 damage issue,OTS#175514

Security Classification	Compal Secret Data		
Issued Date	2005/03/01	Deciphered Date	2005/04/06

THIS SHEET OF ENGINEERING DRAWING IS THE PROPRIETARY PROPERTY OF COMPAL ELECTRONICS, INC. AND CONTAINS CONFIDENTIAL AND TRADE SECRET INFORMATION. THIS SHEET MAY NOT BE TRANSFERED FROM THE CUSTODY OF THE COMPETENT DIVISION OF R&D DEPARTMENT EXCEPT AS AUTHORIZED BY COMPAL ELECTRONICS, INC. NEITHER THIS SHEET NOR THE INFORMATION IT CONTAINS MAY BE USED BY OR DISCLOSED TO ANY THIRD PARTY WITHOUT PRIOR WRITTEN CONSENT OF COMPAL ELECTRONICS, INC.

Compal Electronics, inc.

Title: SCHEMATIC, M/B LA-3181P

Size: Custom | Document Number: 401417 | Rev: B

Date: 星期三, 三月 08, 2006 | Sheet 33 of 54

USB CONNECTOR 0/3 (Left side)

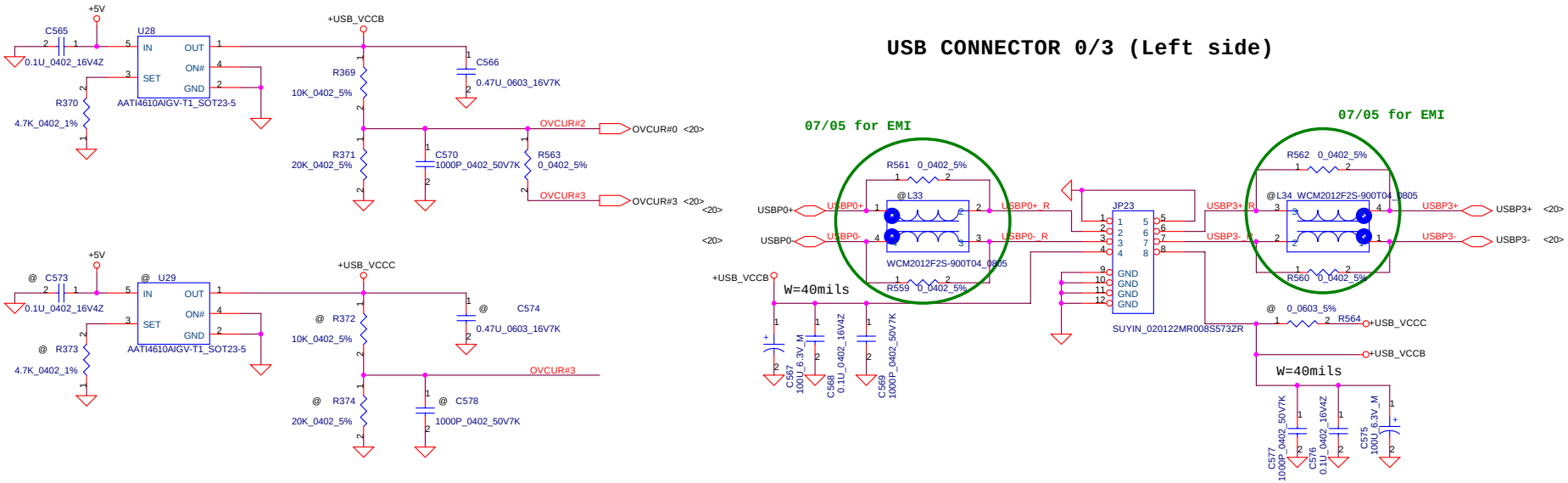

BT CONNECTOR

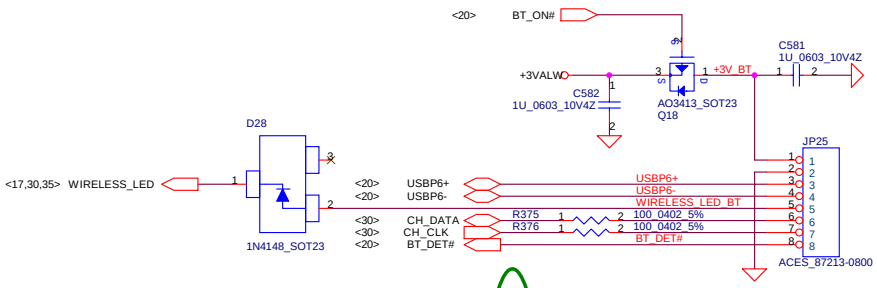

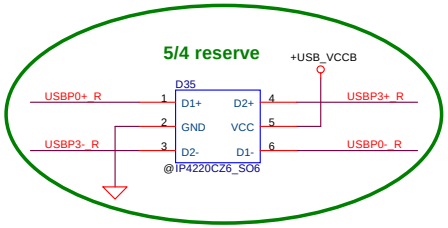

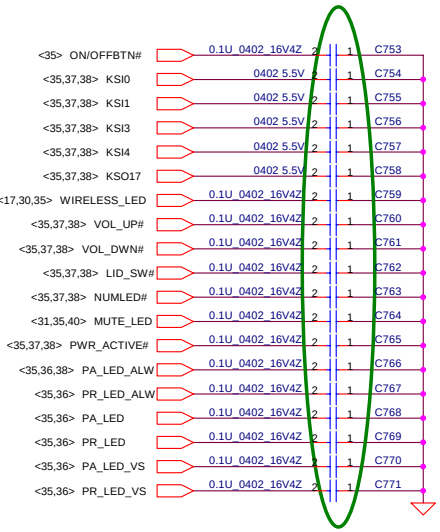

Add Varistor on C756, C757, C758 and Add Caps on C760, C761, C762, C763, C765 (9/5 Cayenne MV) for EMI rewuirement

9/26 Add all components for Cayenne MV2 and Boxster PVR

2005.08.11 for EMI solution

Security Classification	Compal Secret Data		
Issued Date	2005/03/01	Deciphered Date	2005/04/06

THIS SHEET OF ENGINEERING DRAWING IS THE PROPRIETARY PROPERTY OF COMPAL ELECTRONICS, INC. AND CONTAINS CONFIDENTIAL AND TRADE SECRET INFORMATION. THIS SHEET MAY NOT BE TRANSFERED FROM THE CUSTODY OF THE COMPETENT DIVISION OF R&D DEPARTMENT EXCEPT AS AUTHORIZED BY COMPAL ELECTRONICS, INC. NEITHER THIS SHEET NOR THE INFORMATION IT CONTAINS MAY BE USED BY OR DISCLOSED TO ANY THIRD PARTY WITHOUT PRIOR WRITTEN CONSENT OF COMPAL ELECTRONICS, INC.

Compal Electronics, inc.

Title: SCHEMATIC, M/B LA-3181P

Size: Custom | Document Number: 401417 | Rev: B

Date: 星期三, 三月 08, 2006 | Sheet 34 of 54

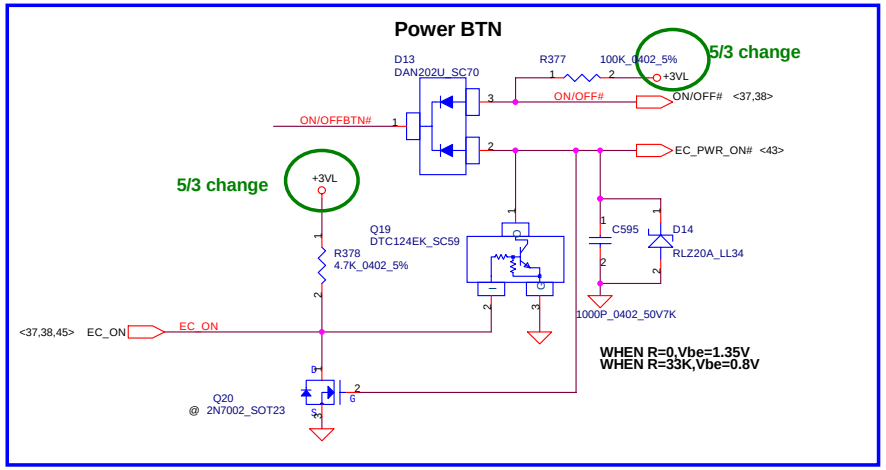

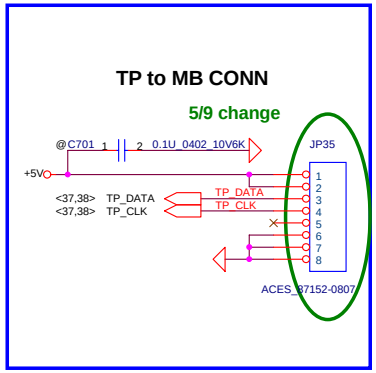

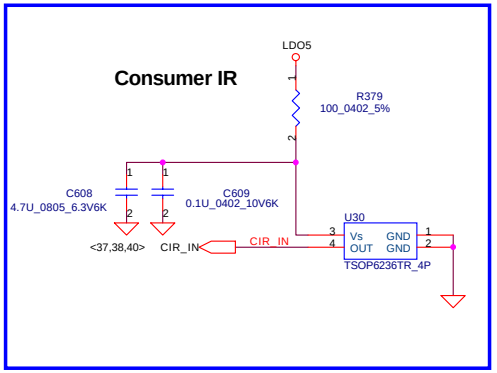

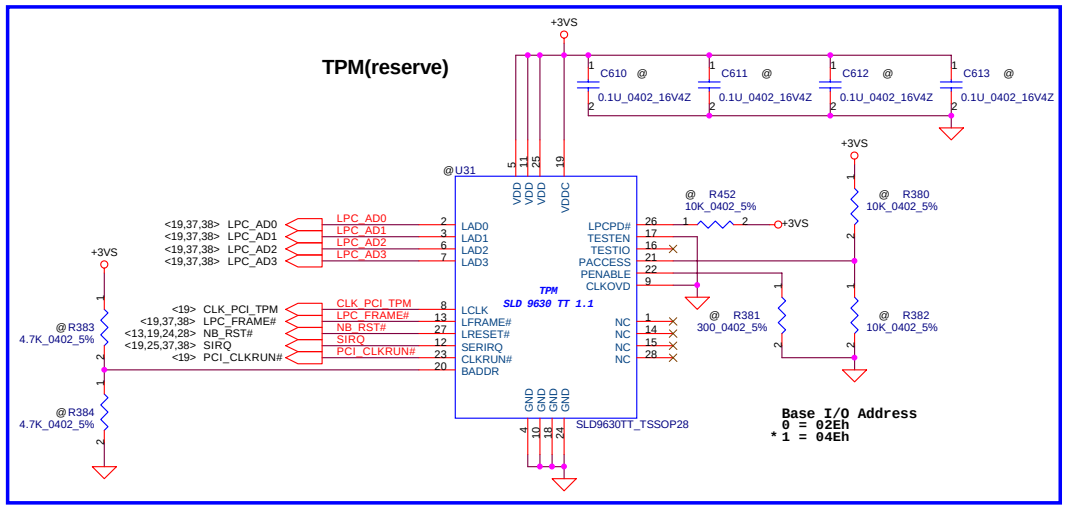

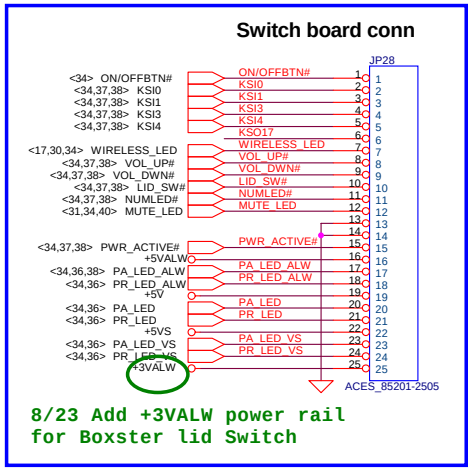

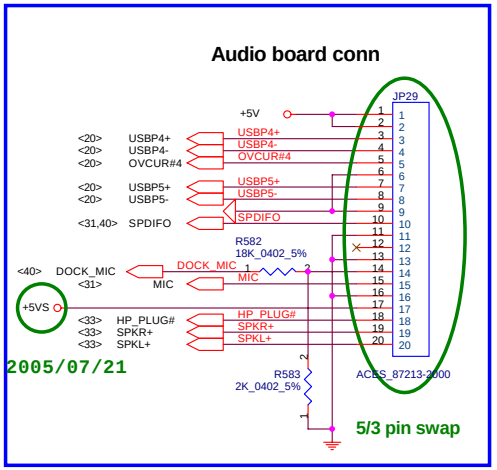

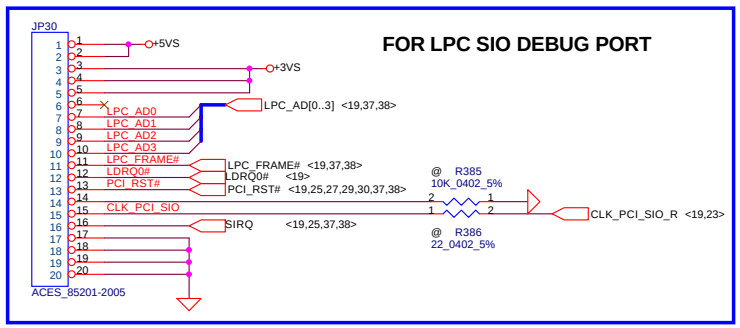

Security Classification	Compal Secret Data		
Issued Date	2005/03/01	Deciphered Date	2005/04/06

THIS SHEET OF ENGINEERING DRAWING IS THE PROPRIETARY PROPERTY OF COMPAL ELECTRONICS, INC. AND CONTAINS CONFIDENTIAL AND TRADE SECRET INFORMATION. THIS SHEET MAY NOT BE TRANSFERED FROM THE CUSTODY OF THE COMPETENT DIVISION OF R&D DEPARTMENT EXCEPT AS AUTHORIZED BY COMPAL ELECTRONICS, INC. NEITHER THIS SHEET NOR THE INFORMATION IT CONTAINS MAY BE USED BY OR DISCLOSED TO ANY THIRD PARTY WITHOUT PRIOR WRITTEN CONSENT OF COMPAL ELECTRONICS, INC.

Compal Electronics, inc.

Title: SCHEMATIC, M/B LA-3181P

Size: Custom | Document Number: 401417 | Rev: B

Date: 星期三, 三月 08, 2006 | Sheet 35 of 54

For PA

FOR POWER BUTTON BACKLIGHT SYSTEM POWER

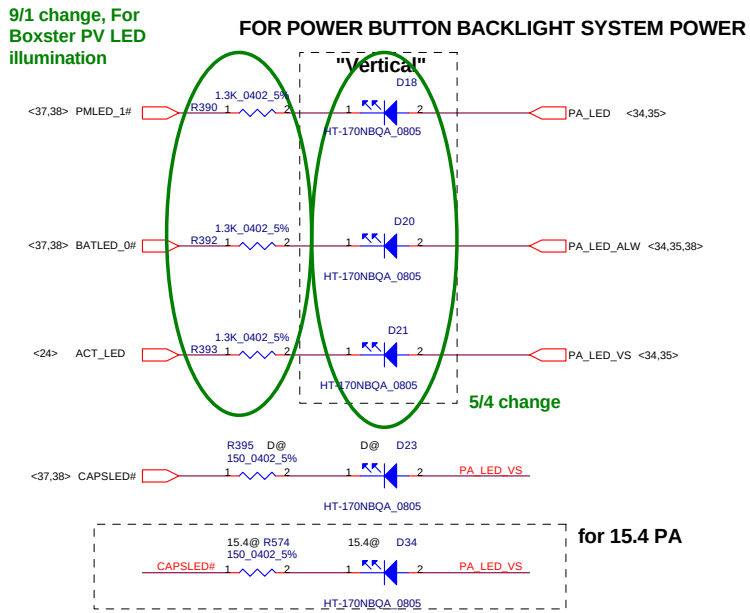

For PR

FOR POWER BUTTON BACKLIGHT SYSTEM POWER

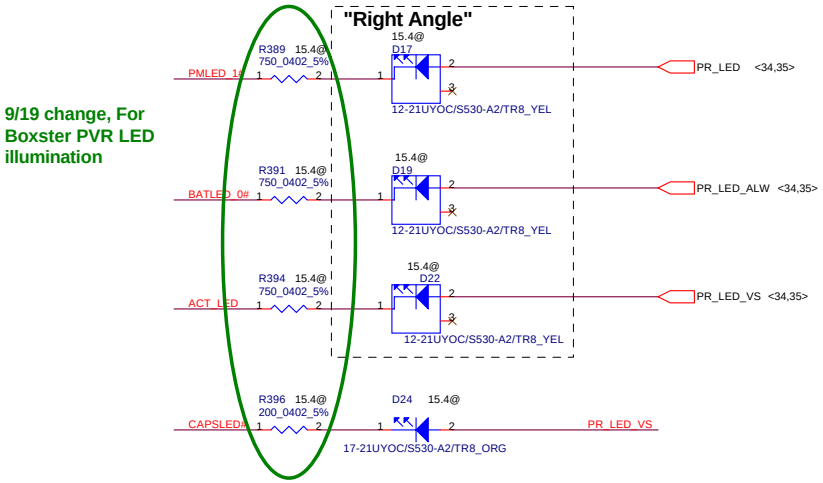

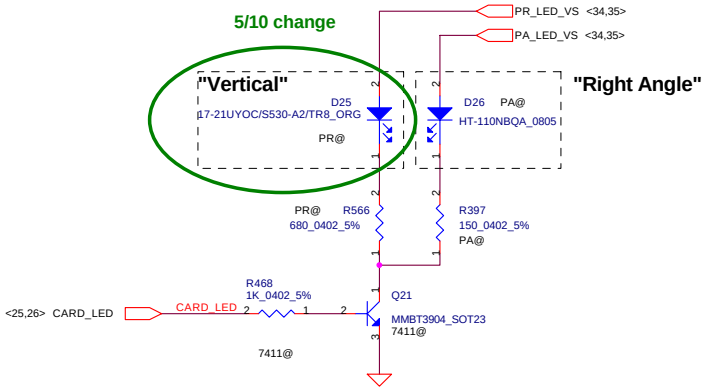

Security Classification	Compal Secret Data		
Issued Date	2005/03/01	Deciphered Date	2005/04/06

THIS SHEET OF ENGINEERING DRAWING IS THE PROPRIETARY PROPERTY OF COMPAL ELECTRONICS, INC. AND CONTAINS CONFIDENTIAL AND TRADE SECRET INFORMATION. THIS SHEET MAY NOT BE TRANSFERED FROM THE CUSTODY OF THE COMPETENT DIVISION OF R&D DEPARTMENT EXCEPT AS AUTHORIZED BY COMPAL ELECTRONICS, INC. NEITHER THIS SHEET NOR THE INFORMATION IT CONTAINS MAY BE USED BY OR DISCLOSED TO ANY THIRD PARTY WITHOUT PRIOR WRITTEN CONSENT OF COMPAL ELECTRONICS, INC.

Compal Electronics, inc.

Title: SCHEMATIC, M/B LA-3181P

Size: Custom | Document Number: 401417 | Rev: B

Date: 星期三, 三月 08, 2006 | Sheet 36 of 54

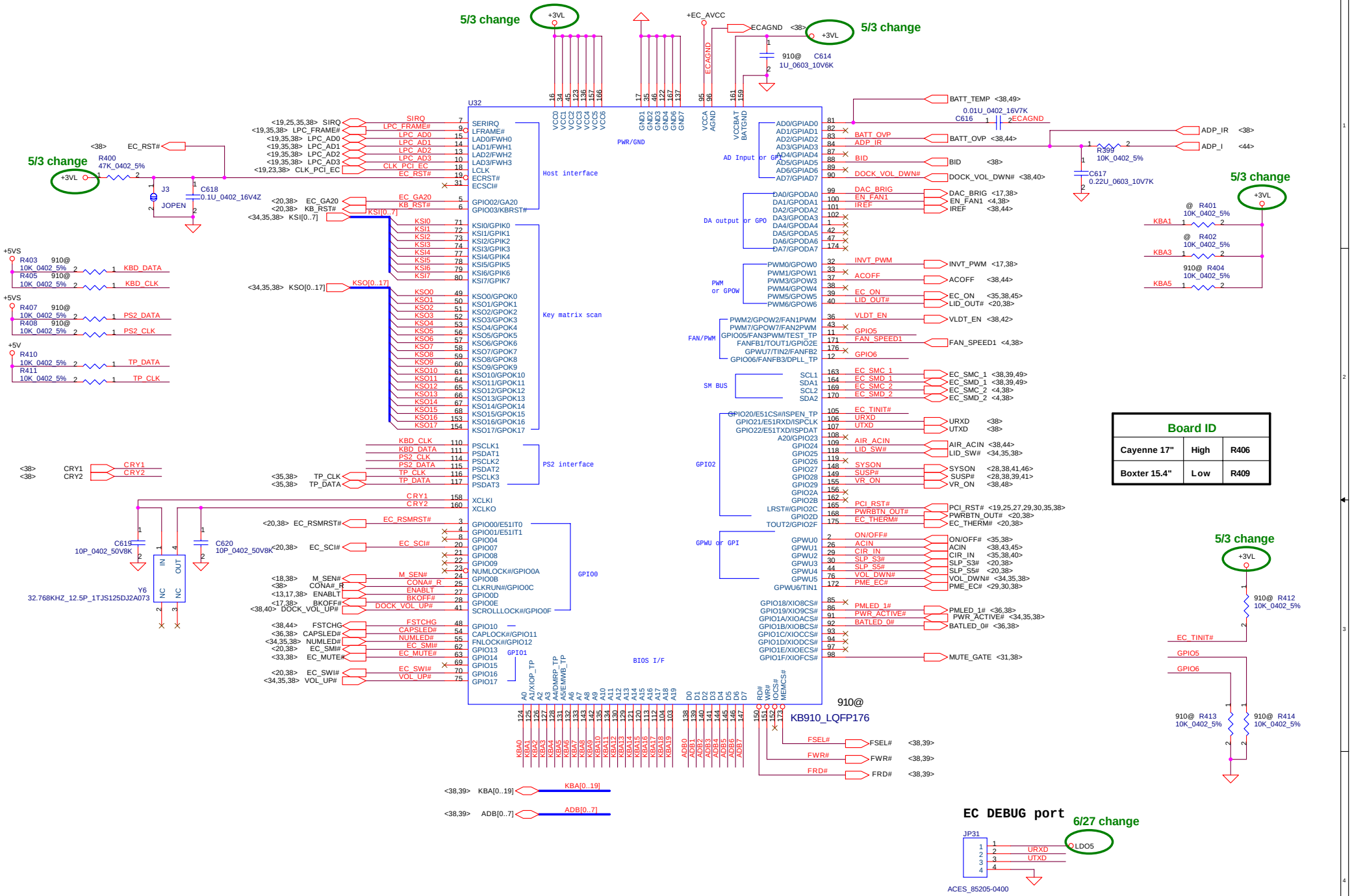

Board ID		
Cayenne 17"	High	R406
Boxter 15.4"	Low	R409

Security Classification	Compal Secret Data		
Issued Date	2005/03/01	Deciphered Date	2005/04/06

THIS SHEET OF ENGINEERING DRAWING IS THE PROPRIETARY PROPERTY OF COMPAL ELECTRONICS, INC. AND CONTAINS CONFIDENTIAL AND TRADE SECRET INFORMATION. THIS SHEET MAY NOT BE TRANSFERED FROM THE CUSTODY OF THE COMPETENT DIVISION OF R&D DEPARTMENT EXCEPT AS AUTHORIZED BY COMPAL ELECTRONICS, INC. NEITHER THIS SHEET NOR THE INFORMATION IT CONTAINS MAY BE USED BY OR DISCLOSED TO ANY THIRD PARTY WITHOUT PRIOR WRITTEN CONSENT OF COMPAL ELECTRONICS, INC.

Compal Electronics, inc.

Title: SCHEMATIC, M/B LA-3181P

Size: Custom | Document Number: 401417 | Rev: B

Date: 星期三, 三月 08, 2006 | Sheet 37 of 54

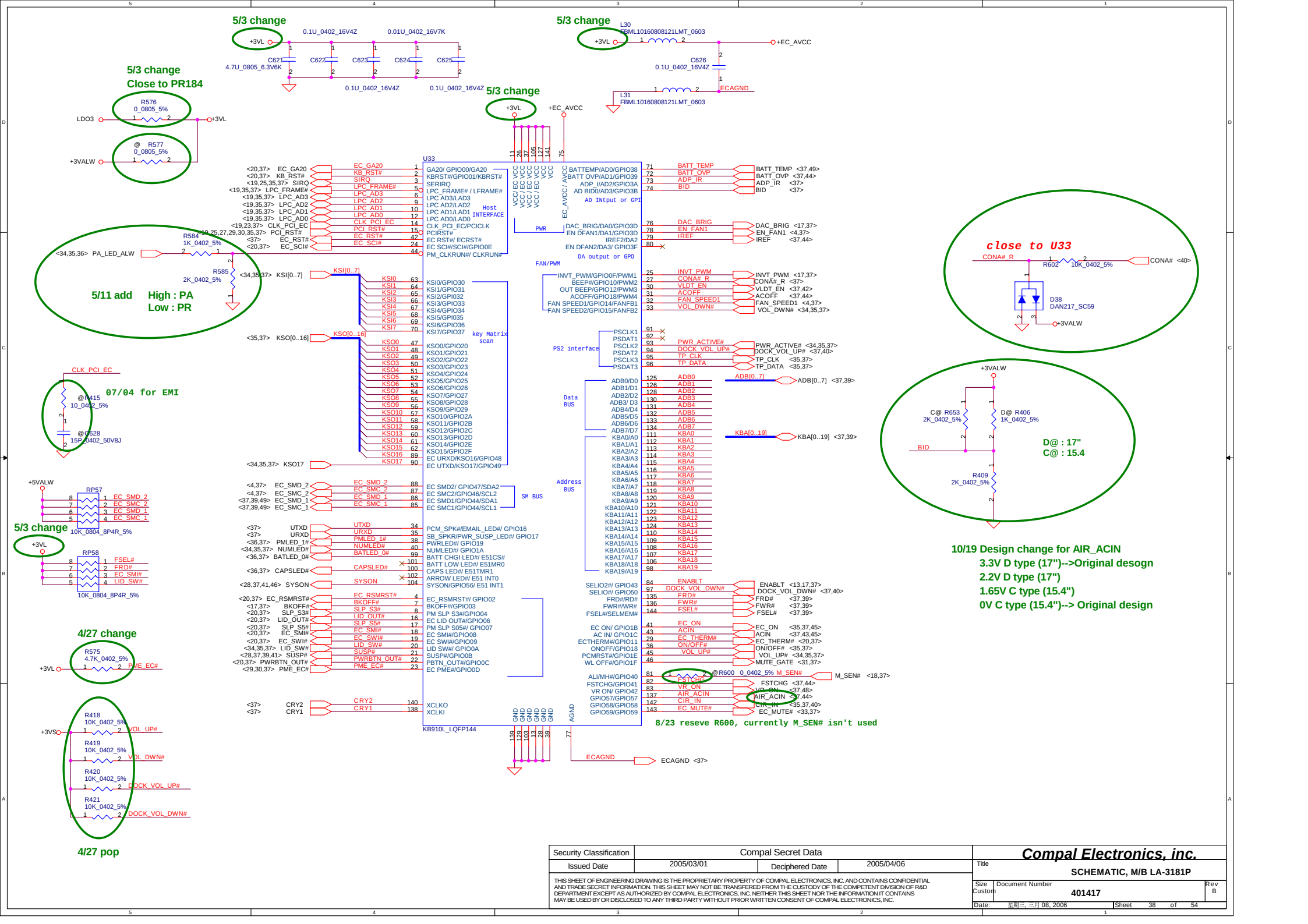

Security Classification	Compal Secret Data		
Issued Date	2005/03/01	Deciphered Date	2005/04/06

THIS SHEET OF ENGINEERING DRAWING IS THE PROPRIETARY PROPERTY OF COMPAL ELECTRONICS, INC. AND CONTAINS CONFIDENTIAL AND TRADE SECRET INFORMATION. THIS SHEET MAY NOT BE TRANSFERED FROM THE CUSTODY OF THE COMPETENT DIVISION OF R&D DEPARTMENT EXCEPT AS AUTHORIZED BY COMPAL ELECTRONICS, INC. NEITHER THIS SHEET NOR THE INFORMATION IT CONTAINS MAY BE USED BY OR DISCLOSED TO ANY THIRD PARTY WITHOUT PRIOR WRITTEN CONSENT OF COMPAL ELECTRONICS, INC.

Compal Electronics, inc.

Title: SCHEMATIC, M/B LA-3181P

Size: Custom | Document Number: 401417 | Rev: B

Date: 星期三, 三月 08, 2006 | Sheet 38 of 54

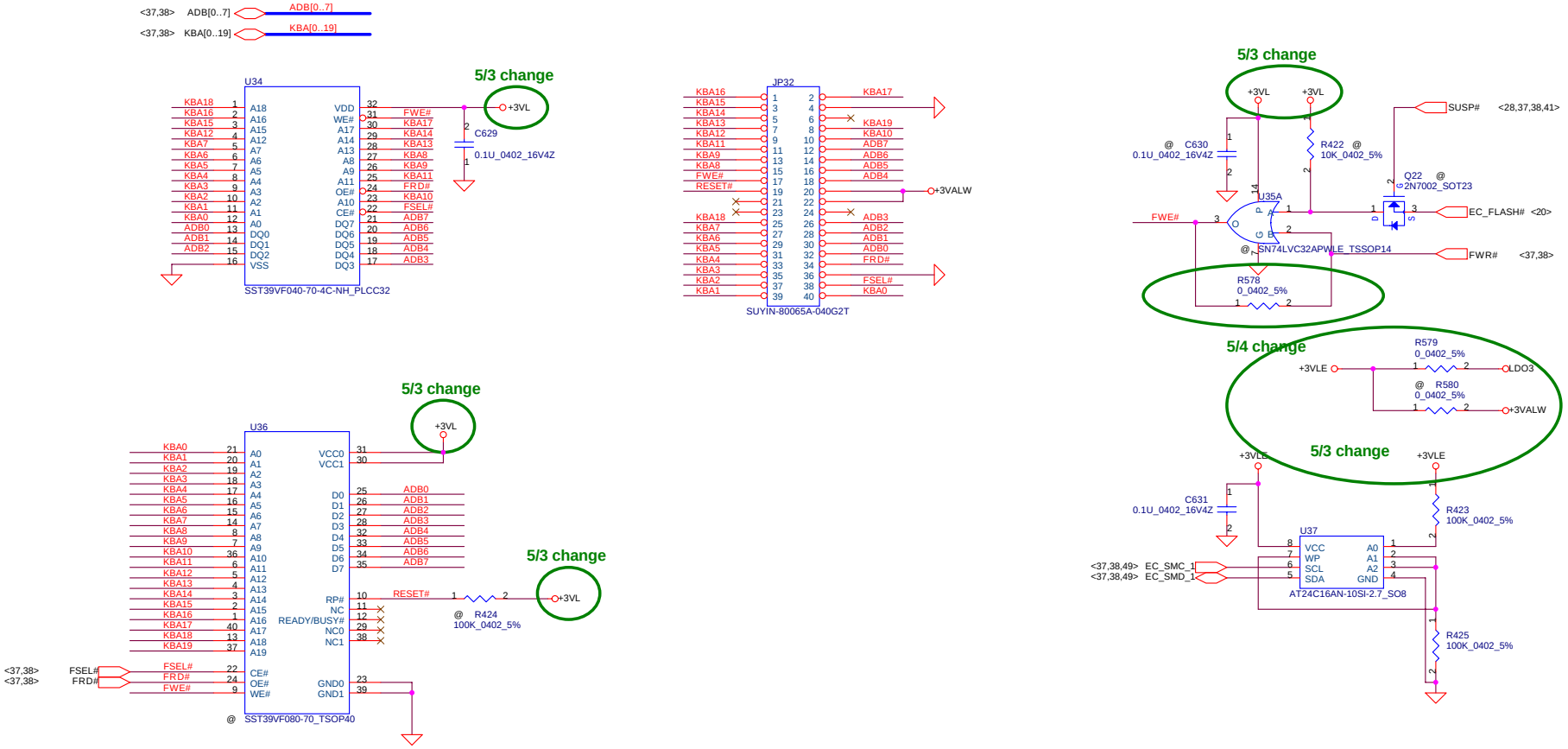

Security Classification	Compal Secret Data		
Issued Date	2005/03/01	Deciphered Date	2005/04/06

THIS SHEET OF ENGINEERING DRAWING IS THE PROPRIETARY PROPERTY OF COMPAL ELECTRONICS, INC. AND CONTAINS CONFIDENTIAL AND TRADE SECRET INFORMATION. THIS SHEET MAY NOT BE TRANSFERED FROM THE CUSTODY OF THE COMPETENT DIVISION OF R&D DEPARTMENT EXCEPT AS AUTHORIZED BY COMPAL ELECTRONICS, INC. NEITHER THIS SHEET NOR THE INFORMATION IT CONTAINS MAY BE USED BY OR DISCLOSED TO ANY THIRD PARTY WITHOUT PRIOR WRITTEN CONSENT OF COMPAL ELECTRONICS, INC.

Compal Electronics, inc.

Title: SCHEMATIC, M/B LA-3181P

Size: Custom | Document Number: 401417 | Rev: B

Date: 星期三, 三月 08, 2006 | Sheet 39 of 54

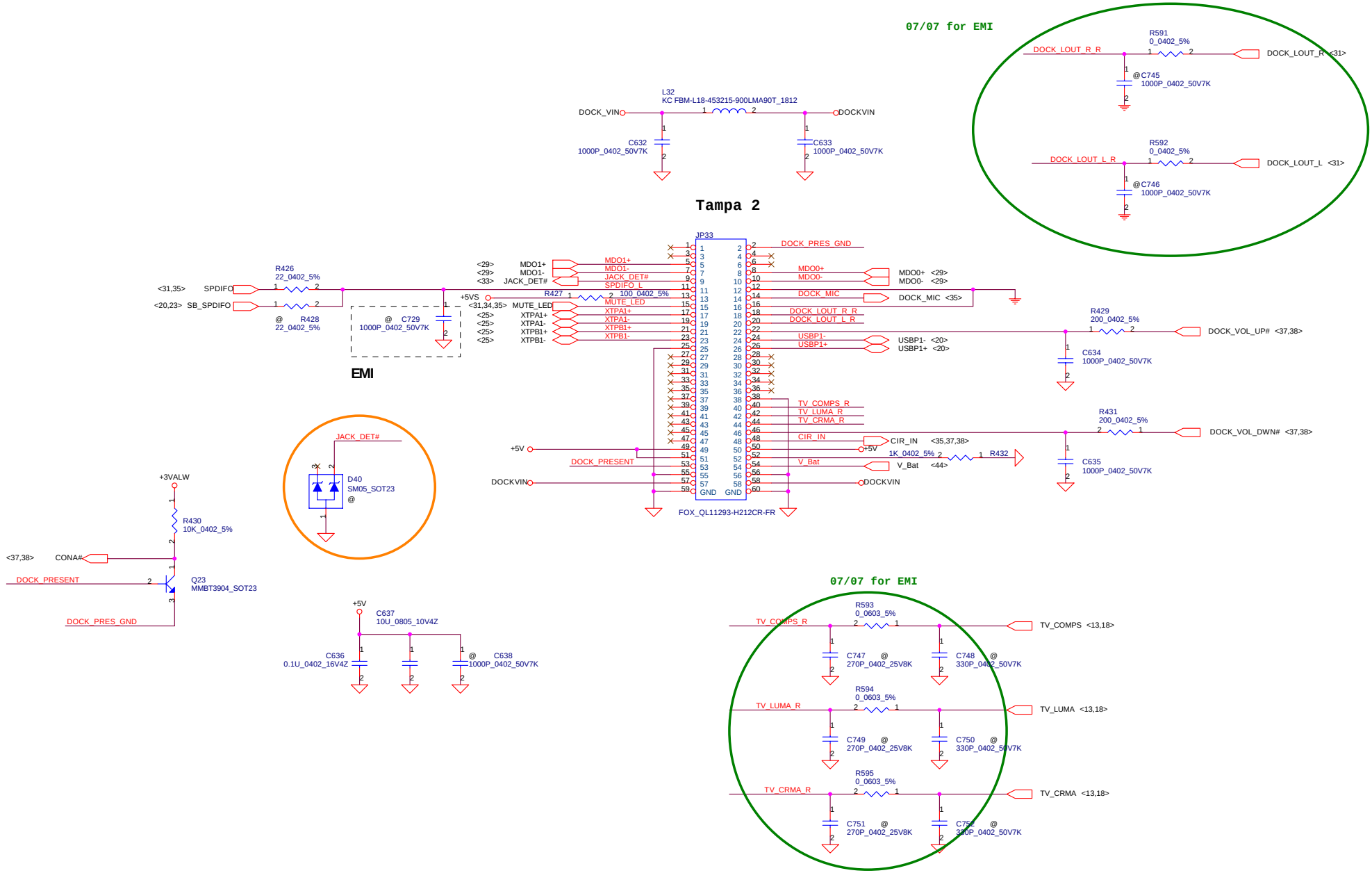

Security Classification	Compal Secret Data		
Issued Date	2005/03/01	Deciphered Date	2005/04/06

THIS SHEET OF ENGINEERING DRAWING IS THE PROPRIETARY PROPERTY OF COMPAL ELECTRONICS, INC. AND CONTAINS CONFIDENTIAL AND TRADE SECRET INFORMATION. THIS SHEET MAY NOT BE TRANSFERED FROM THE CUSTODY OF THE COMPETENT DIVISION OF R&D DEPARTMENT EXCEPT AS AUTHORIZED BY COMPAL ELECTRONICS, INC. NEITHER THIS SHEET NOR THE INFORMATION IT CONTAINS MAY BE USED BY OR DISCLOSED TO ANY THIRD PARTY WITHOUT PRIOR WRITTEN CONSENT OF COMPAL ELECTRONICS, INC.

Compal Electronics, Inc.

Title: SCHEMATIC, M/B LA-3181P

Size: Custom | Document Number: 401417 | Rev: B

Date: 星期三, 三月 08, 2006 | Sheet 40 of 54

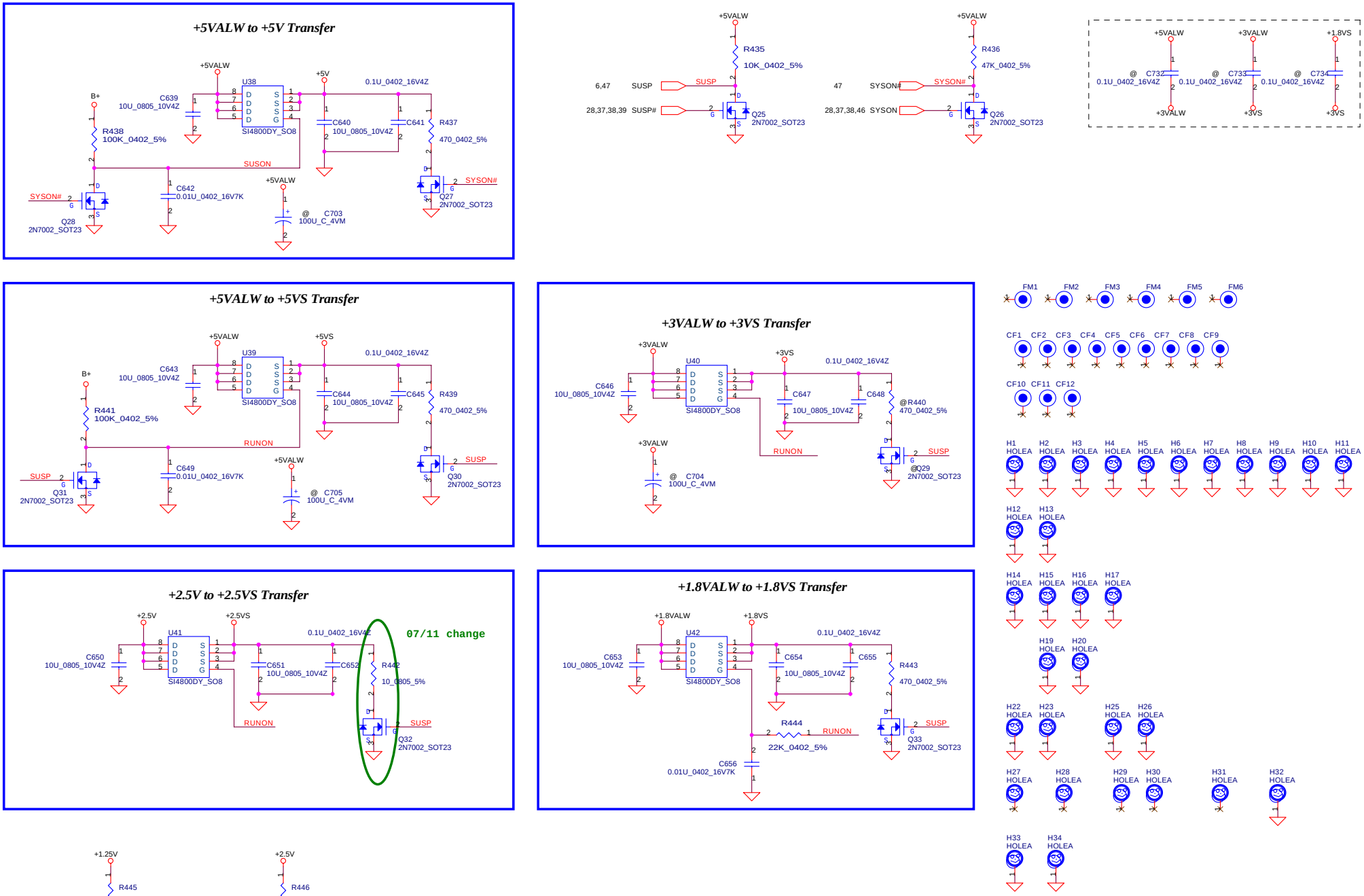

Security Classification	Compal Secret Data		
Issued Date	2005/03/01	Deciphered Date	2005/04/06

THIS SHEET OF ENGINEERING DRAWING IS THE PROPRIETARY PROPERTY OF COMPAL ELECTRONICS, INC. AND CONTAINS CONFIDENTIAL AND TRADE SECRET INFORMATION. THIS SHEET MAY NOT BE TRANSFERED FROM THE CUSTODY OF THE COMPETENT DIVISION OF R&D DEPARTMENT EXCEPT AS AUTHORIZED BY COMPAL ELECTRONICS, INC. NEITHER THIS SHEET NOR THE INFORMATION IT CONTAINS MAY BE USED BY OR DISCLOSED TO ANY THIRD PARTY WITHOUT PRIOR WRITTEN CONSENT OF COMPAL ELECTRONICS, INC.

Compal Electronics, inc.

Title: SCHEMATIC, M/B LA-3181P

Size: Custom | Document Number: 401417 | Rev: B

Date: 星期三, 三月 08, 2006 | Sheet 41 of 54

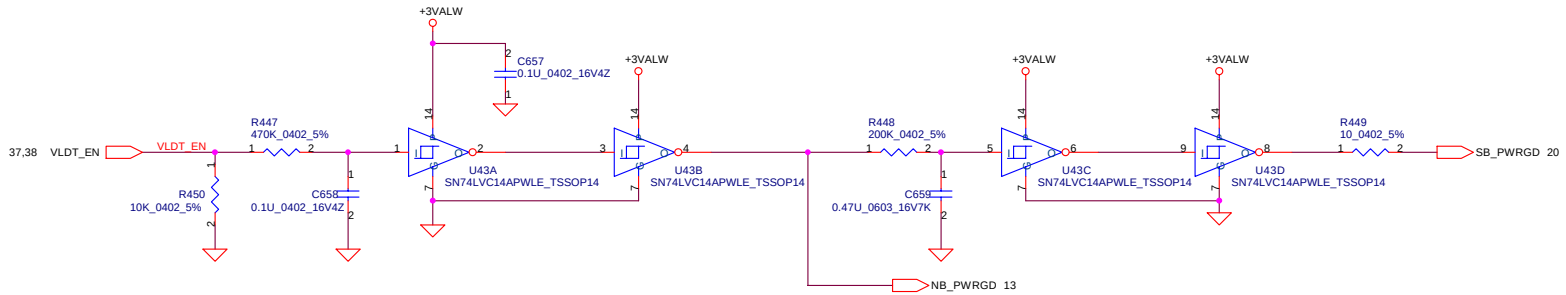

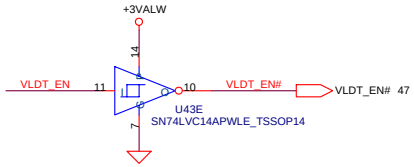

note:T1 minimum 15ms,T2 minimum 33ms/maximum 500ms, SUSP# goes to low after SB_PWRGD goes to low for power down.

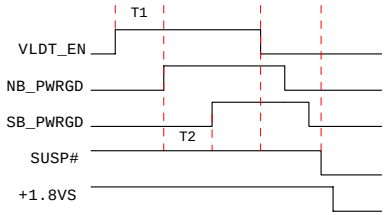

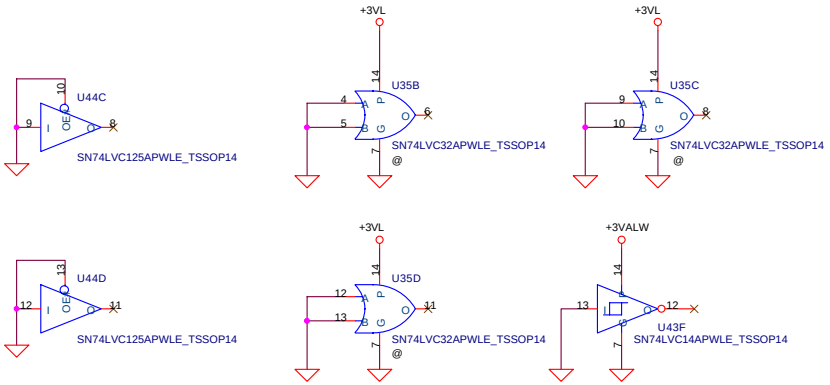

Security Classification	Compal Secret Data		
Issued Date	2005/03/01	Deciphered Date	2005/04/06

THIS SHEET OF ENGINEERING DRAWING IS THE PROPRIETARY PROPERTY OF COMPAL ELECTRONICS, INC. AND CONTAINS CONFIDENTIAL AND TRADE SECRET INFORMATION. THIS SHEET MAY NOT BE TRANSFERED FROM THE CUSTODY OF THE COMPETENT DIVISION OF R&D DEPARTMENT EXCEPT AS AUTHORIZED BY COMPAL ELECTRONICS, INC. NEITHER THIS SHEET NOR THE INFORMATION IT CONTAINS MAY BE USED BY OR DISCLOSED TO ANY THIRD PARTY WITHOUT PRIOR WRITTEN CONSENT OF COMPAL ELECTRONICS, INC.

Compal Electronics, inc.

Title: **SCHEMATIC, M/B LA-3181P**

Size: Custom | Document Number: **401417** | Rev: B

Date: 星期三, 三月 08, 2006 | Sheet 42 of 54

Detector

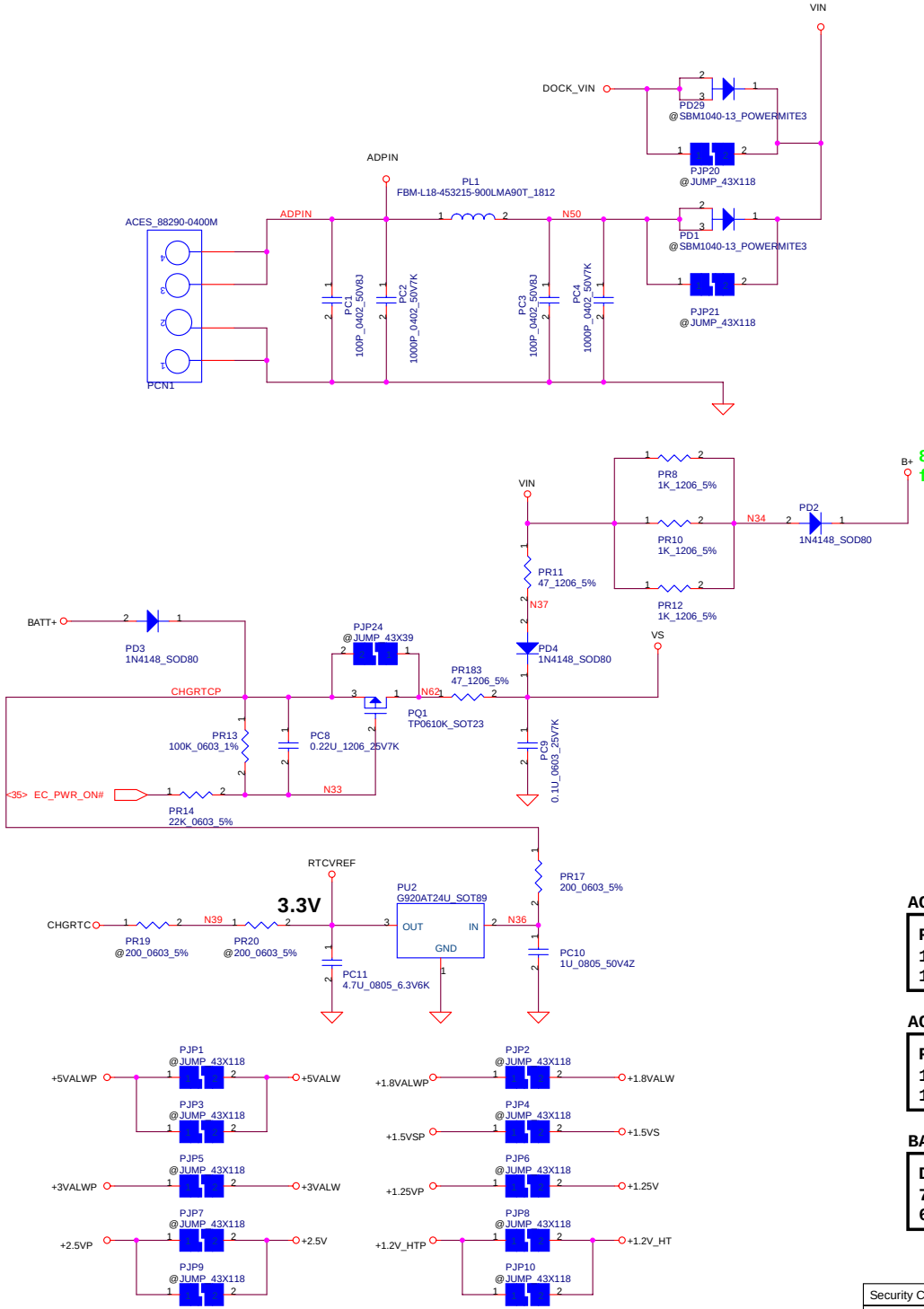

Vin Detector : Cayenne

18.234	17.841	17.449
17.597	17.210	16.813

Vin Detector : Boxster

14.352	13.950	13.555
13.818	13.411	13.000

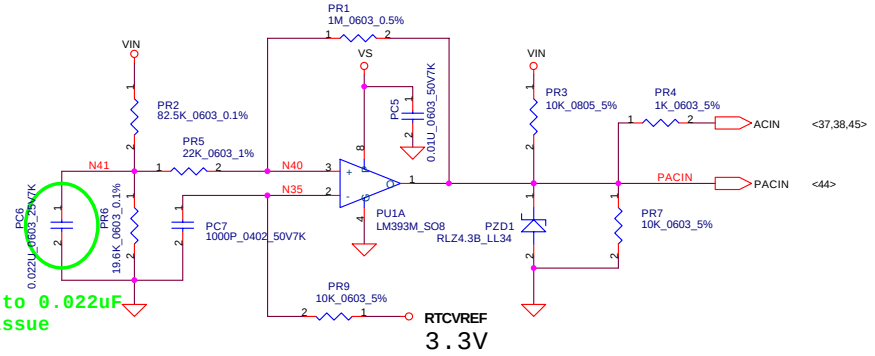

8/29 Change to 0.022uF
for AC Off issue

Cayenne : PR5=22K; PR6=19.6K
Boxster : PR5=47K; PR6=27K

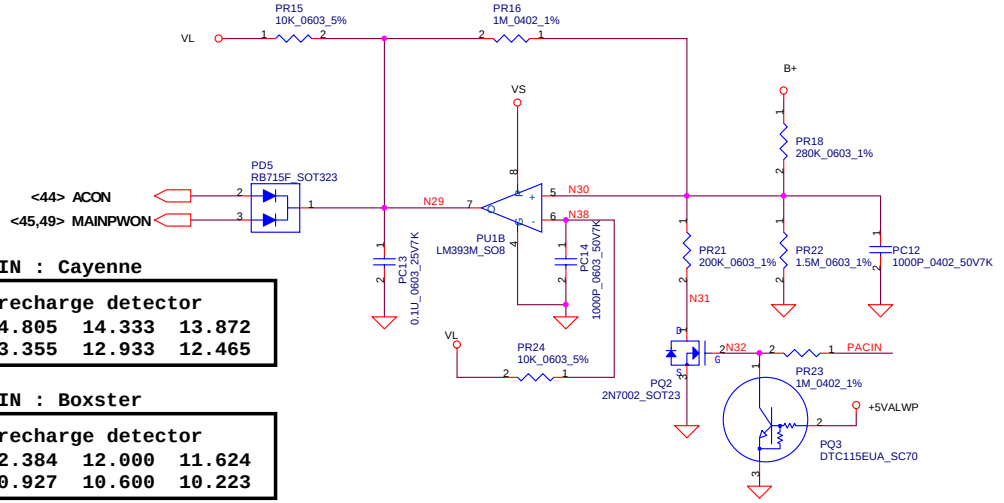

ACIN : Cayenne

Precharge detector

14.805	14.333	13.872
13.355	12.933	12.465

ACIN : Boxster

Precharge detector

12.384	12.000	11.624
10.927	10.600	10.223

BATT

Detector

7.558	7.333	7.112
6.108	5.933	5.704

Cayenne : PR21=200K
Boxster : PR21=300K

Security Classification	Compal Secret Data		
Issued Date	2005/03/01	Deciphered Date	2006/03/01

THIS SHEET OF ENGINEERING DRAWING IS THE PROPRIETARY PROPERTY OF COMPAL ELECTRONICS, INC. AND CONTAINS CONFIDENTIAL AND TRADE SECRET INFORMATION. THIS SHEET MAY NOT BE TRANSFERED FROM THE CUSTODY OF THE COMPETENT DIVISION OF R&D DEPARTMENT EXCEPT AS AUTHORIZED BY COMPAL ELECTRONICS, INC. NEITHER THIS SHEET NOR THE INFORMATION IT CONTAINS MAY BE USED BY OR DISCLOSED TO ANY THIRD PARTY WITHOUT PRIOR WRITTEN CONSENT OF COMPAL ELECTRONICS, INC.

Compal Electronics, Inc.

Title: SCHEMATIC, M/B LA-3181P

Size: Custom | Document Number: 401417 | Rev: B

Date: 星期三, 三月 08, 2006 | Sheet 43 of 54

Charger

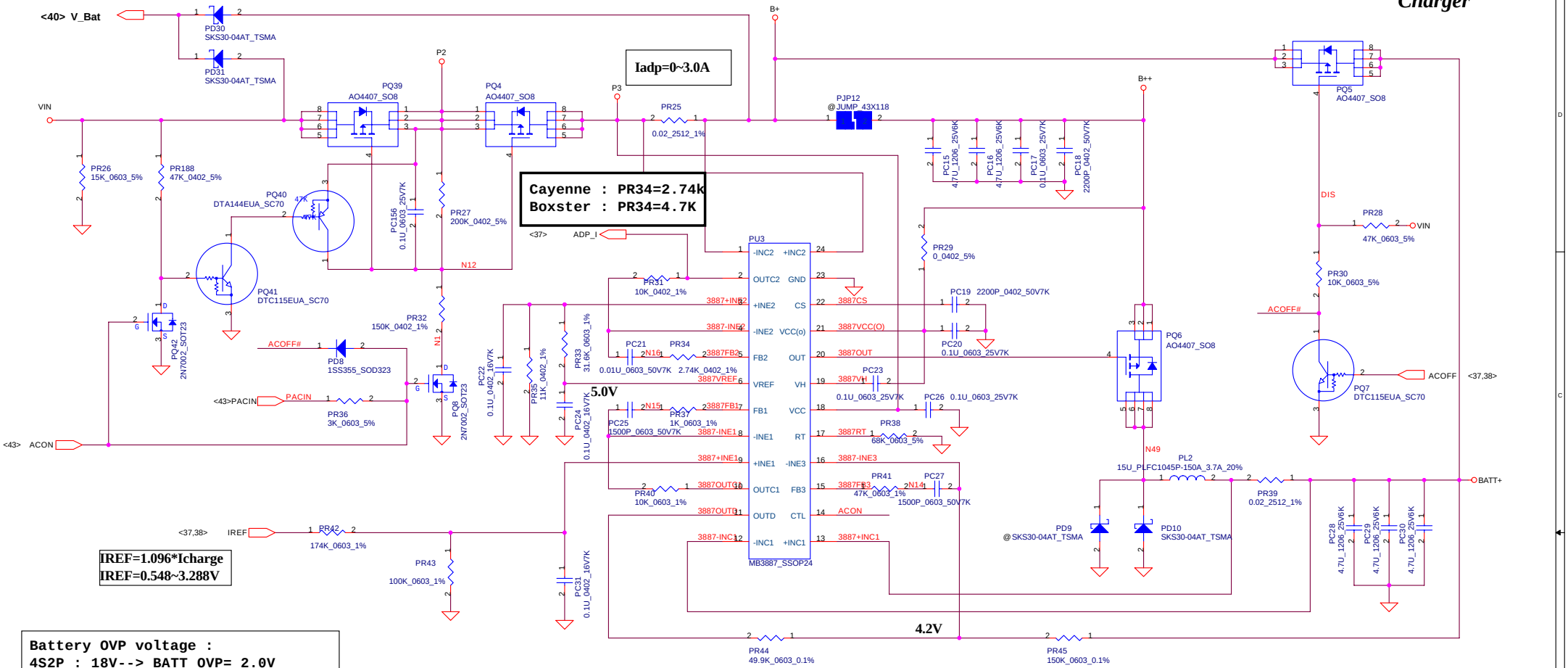

IREF=1.096*Icharge
IREF=0.548~3.288V

Battery OVP voltage :
4S2P : 18V--> BATT_OVP= 2.0V
(BAT_OVP=0.1112*VMB)

3S2P/3S3P : 13.5V--> BATT_OVP= 2.0V
(BAT_OVP=0.14753 *BATT+)

CC=0.4~3.0A
BATT_Charge Voltage Select
4S2P CV=16.8V PR44 = 49.9K_0603_0.1% PR45=150K_0603_0.1%
3S2P/3S3P CV=12.6V PR44 = 150K_0603_0.1% PR45=300K_0603_0.1%

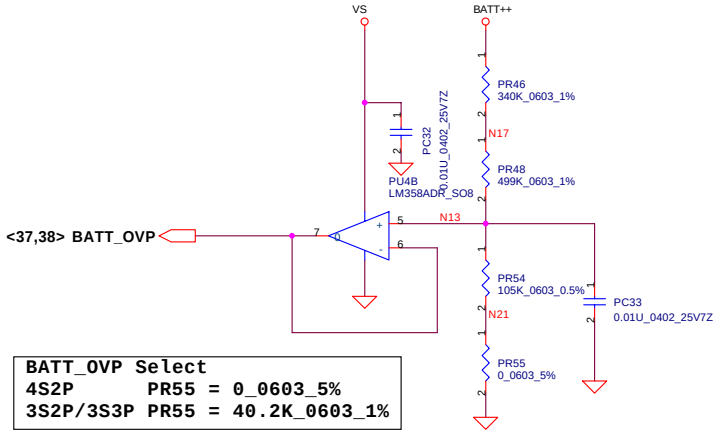

BATT_OVP Select
4S2P PR55 = 0_0603_5%
3S2P/3S3P PR55 = 40.2K_0603_1%

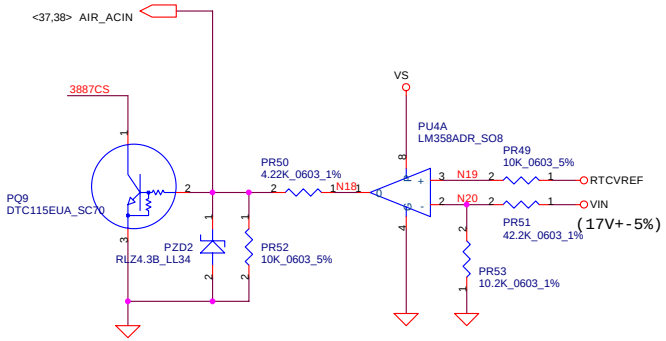

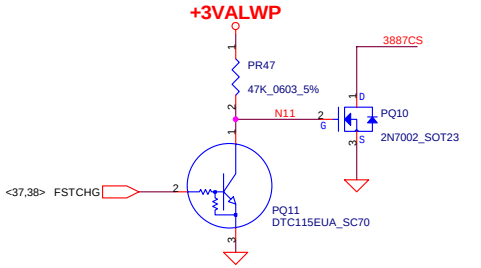

Security Classification	Compal Secret Data		
Issued Date	2005/03/01	Deciphered Date	2006/03/01

THIS SHEET OF ENGINEERING DRAWING IS THE PROPRIETARY PROPERTY OF COMPAL ELECTRONICS, INC. AND CONTAINS CONFIDENTIAL AND TRADE SECRET INFORMATION. THIS SHEET MAY NOT BE TRANSFERED FROM THE CUSTODY OF THE COMPETENT DIVISION OF R&D DEPARTMENT EXCEPT AS AUTHORIZED BY COMPAL ELECTRONICS, INC. NEITHER THIS SHEET NOR THE INFORMATION IT CONTAINS MAY BE USED BY OR DISCLOSED TO ANY THIRD PARTY WITHOUT PRIOR WRITTEN CONSENT OF COMPAL ELECTRONICS, INC.

Compal Electronics, Inc.

Title: SCHEMATIC, M/B LA-3181P

Size: Custom | Document Number: 401417 | Rev: B

Date: 星期三, 三月 08, 2006 | Sheet 44 of 54

+3VALWP/+5VALWP

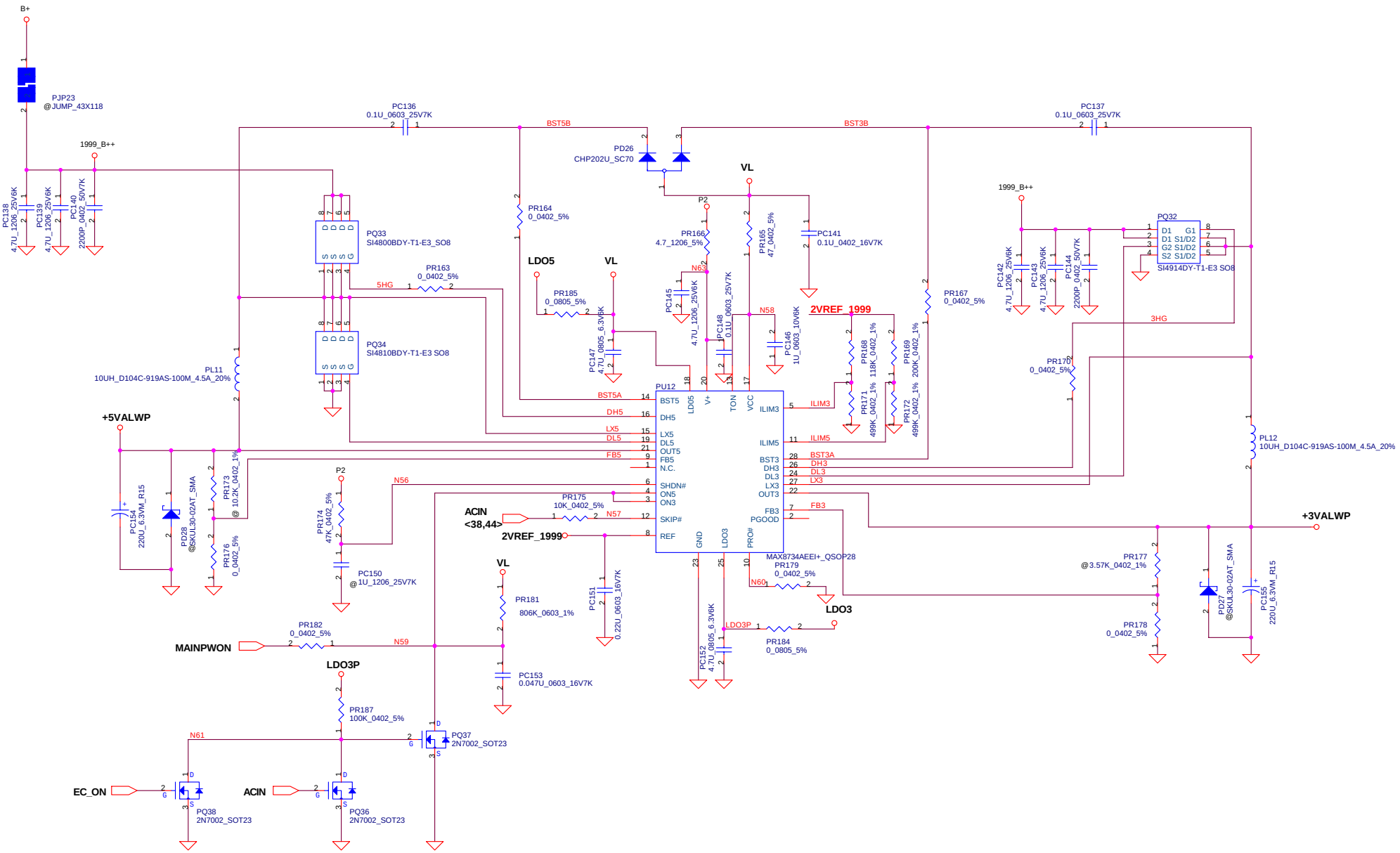

Security Classification	Compal Secret Data		
Issued Date	2005/03/01	Deciphered Date	2006/03/01

THIS SHEET OF ENGINEERING DRAWING IS THE PROPRIETARY PROPERTY OF COMPAL ELECTRONICS, INC. AND CONTAINS CONFIDENTIAL AND TRADE SECRET INFORMATION. THIS SHEET MAY NOT BE TRANSFERED FROM THE CUSTODY OF THE COMPETENT DIVISION OF R&D DEPARTMENT EXCEPT AS AUTHORIZED BY COMPAL ELECTRONICS, INC. NEITHER THIS SHEET NOR THE INFORMATION IT CONTAINS MAY BE USED BY OR DISCLOSED TO ANY THIRD PARTY WITHOUT PRIOR WRITTEN CONSENT OF COMPAL ELECTRONICS, INC.

Compal Electronics, inc.

Title: SCHEMATIC, M/B LA-3181P

Size: Custom | Document Number: 401417 | Rev: B

Date: 星期三, 三月 08, 2006 | Sheet 45 of 54

+1.8VALWP/+2.5VP

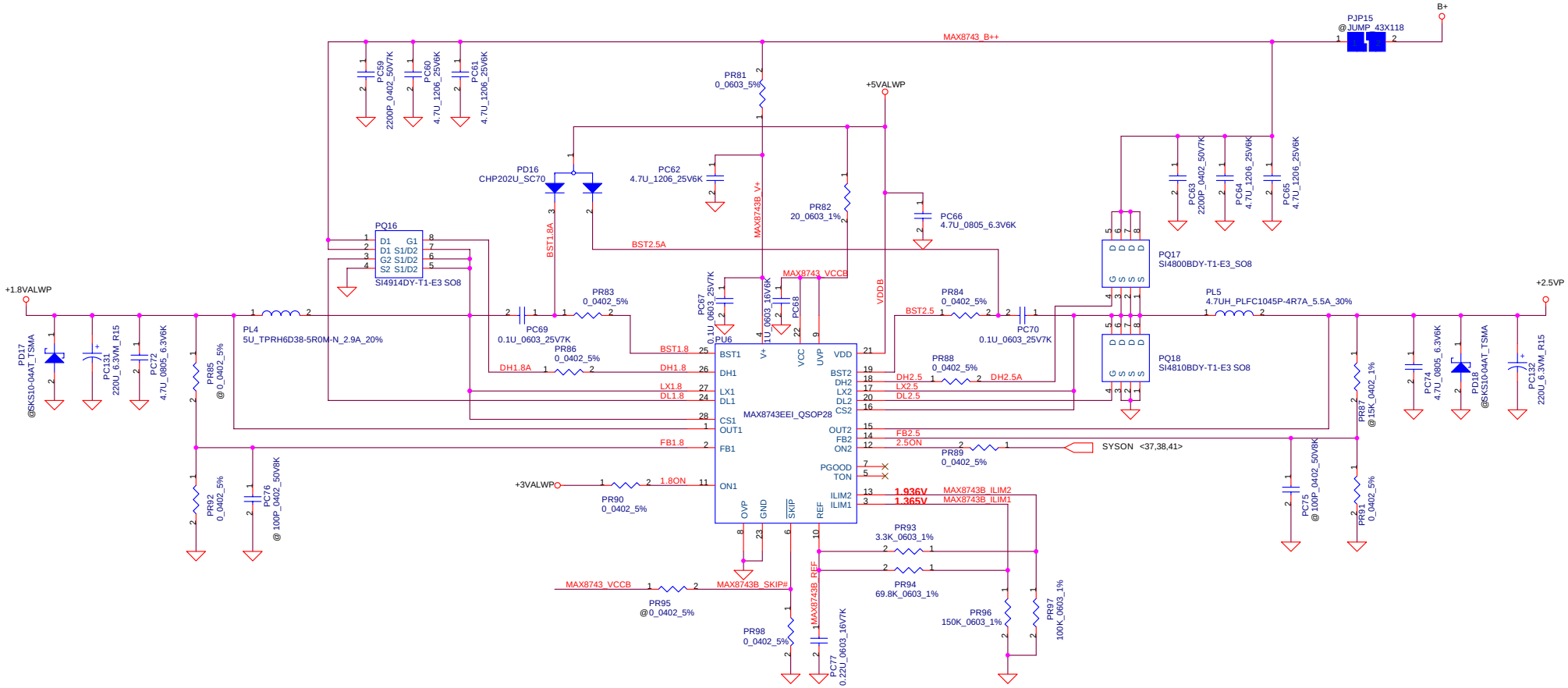

Security Classification	Compal Secret Data		
Issued Date	2005/03/01	Deciphered Date	2006/03/01

THIS SHEET OF ENGINEERING DRAWING IS THE PROPRIETARY PROPERTY OF COMPAL ELECTRONICS, INC. AND CONTAINS CONFIDENTIAL AND TRADE SECRET INFORMATION. THIS SHEET MAY NOT BE TRANSFERED FROM THE CUSTODY OF THE COMPETENT DIVISION OF R&D DEPARTMENT EXCEPT AS AUTHORIZED BY COMPAL ELECTRONICS, INC. NEITHER THIS SHEET NOR THE INFORMATION IT CONTAINS MAY BE USED BY OR DISCLOSED TO ANY THIRD PARTY WITHOUT PRIOR WRITTEN CONSENT OF COMPAL ELECTRONICS, INC.

Compal Electronics, inc.

Title: SCHEMATIC, M/B LA-3181P

Size: Custom | Document Number: 401417 | Rev: B

Date: 星期三, 三月 08, 2006 | Sheet 46 of 54

+1.2V_HTP/+1.5VSP/+1.25VP

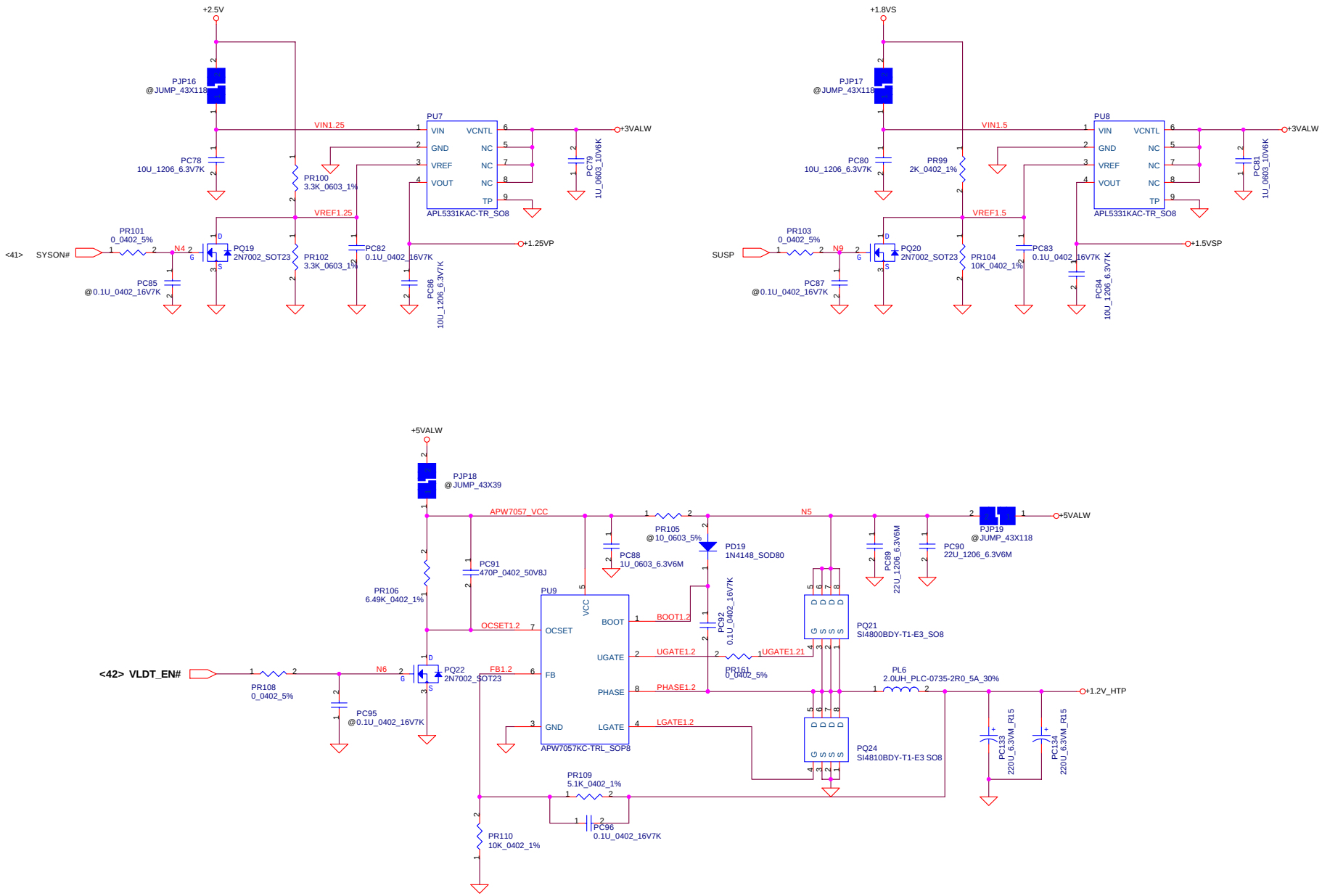

Security Classification	Compal Secret Data			Compal Electronics, inc.
Issued Date	2005/03/01	Deciphered Date	2006/03/01	Title: SCHEMATIC, M/B LA-3181P
				Size: Custom; Document Number: 401417; Rev: B
				Date: 星期三, 三月 08, 2006; Sheet 47 of 54

THIS SHEET OF ENGINEERING DRAWING IS THE PROPRIETARY PROPERTY OF COMPAL ELECTRONICS, INC. AND CONTAINS CONFIDENTIAL AND TRADE SECRET INFORMATION. THIS SHEET MAY NOT BE TRANSFERED FROM THE CUSTODY OF THE COMPETENT DIVISION OF R&D DEPARTMENT EXCEPT AS AUTHORIZED BY COMPAL ELECTRONICS, INC. NEITHER THIS SHEET NOR THE INFORMATION IT CONTAINS MAY BE USED BY OR DISCLOSED TO ANY THIRD PARTY WITHOUT PRIOR WRITTEN CONSENT OF COMPAL ELECTRONICS, INC.

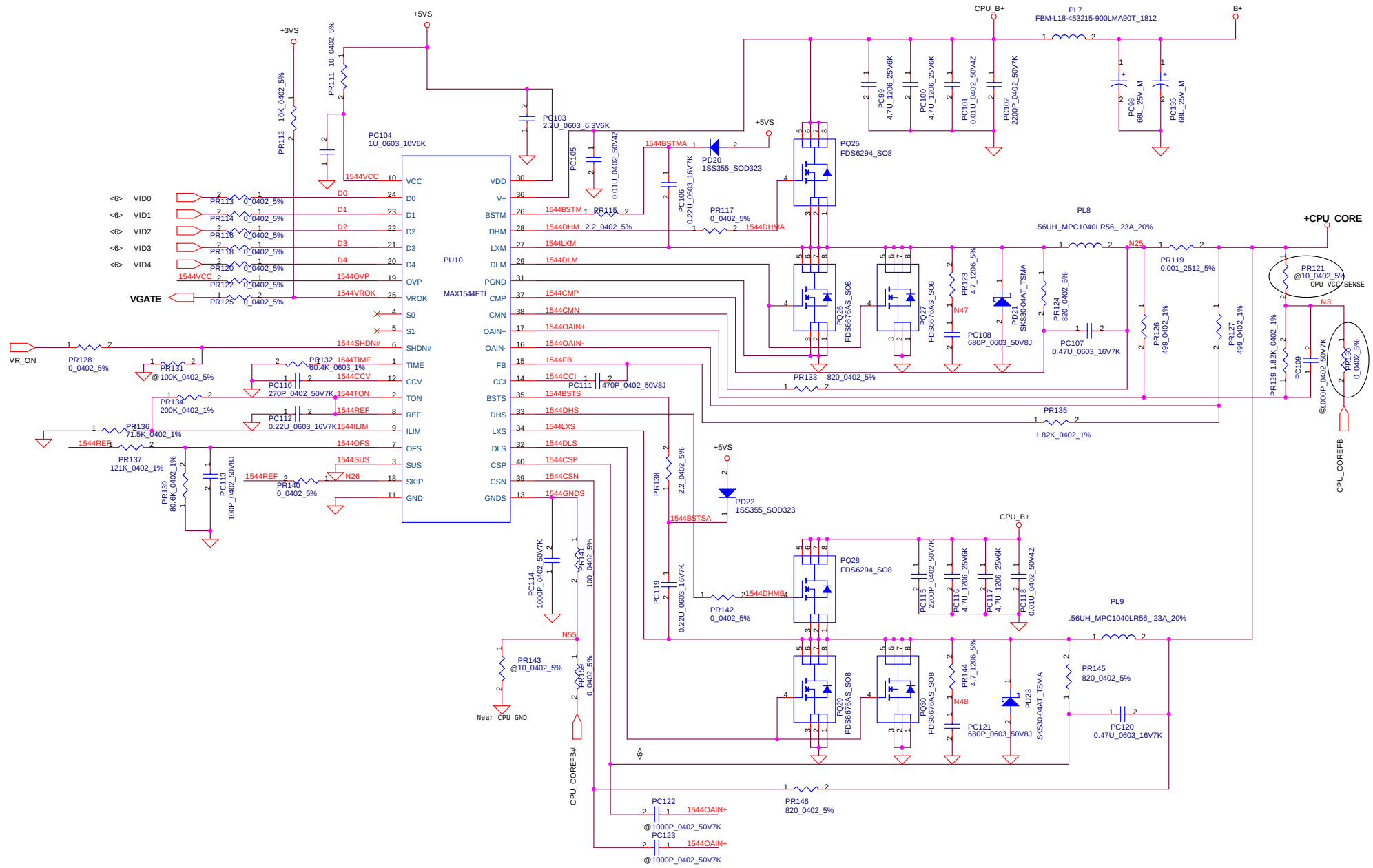

Security Classification	Compal Secret Data		
Issued Date	2005/03/01	Deciphered Date	2006/03/01

THIS SHEET OF ENGINEERING DRAWING IS THE PROPRIETARY PROPERTY OF COMPAL ELECTRONICS, INC. AND CONTAINS CONFIDENTIAL AND TRADE SECRET INFORMATION. THIS SHEET MAY NOT BE TRANSFERED FROM THE CUSTODY OF THE COMPETENT DIVISION OF R&D DEPARTMENT EXCEPT AS AUTHORIZED BY COMPAL ELECTRONICS, INC. NEITHER THIS SHEET NOR THE INFORMATION IT CONTAINS MAY BE USED BY OR DISCLOSED TO ANY THIRD PARTY WITHOUT PRIOR WRITTEN CONSENT OF COMPAL ELECTRONICS, INC.

Compal Electronics, Inc.

Title: SCHEMATIC, M/B LA-3181P

Size: Custom | Document Number: 401417 | Rev: B

Date: 星期三, 三月 08, 2006 | Sheet 48 of 54

Battery Connect/OTP

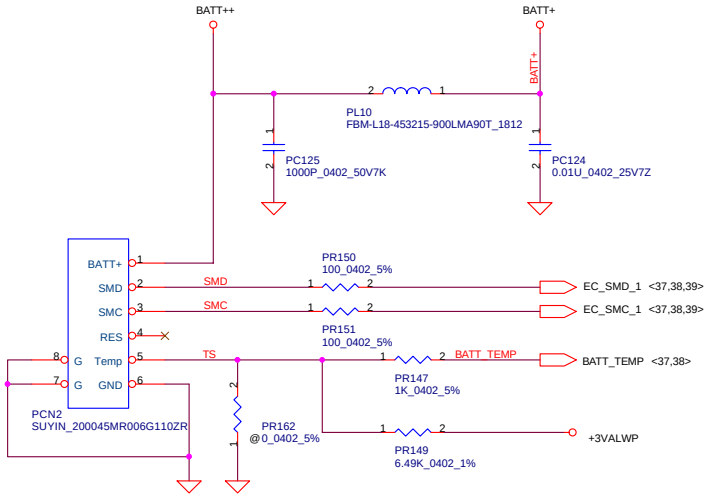

PJPB1 battery connector

SMART Battery:
1.BATT+
2.SMBD
3.SMBC
4.Res
5.Temp
6.GND

CPU

PH1 under CPU botten side :
CPU thermal protection at 90 +-3 degree C
Recovery at 50 +-3 degree C

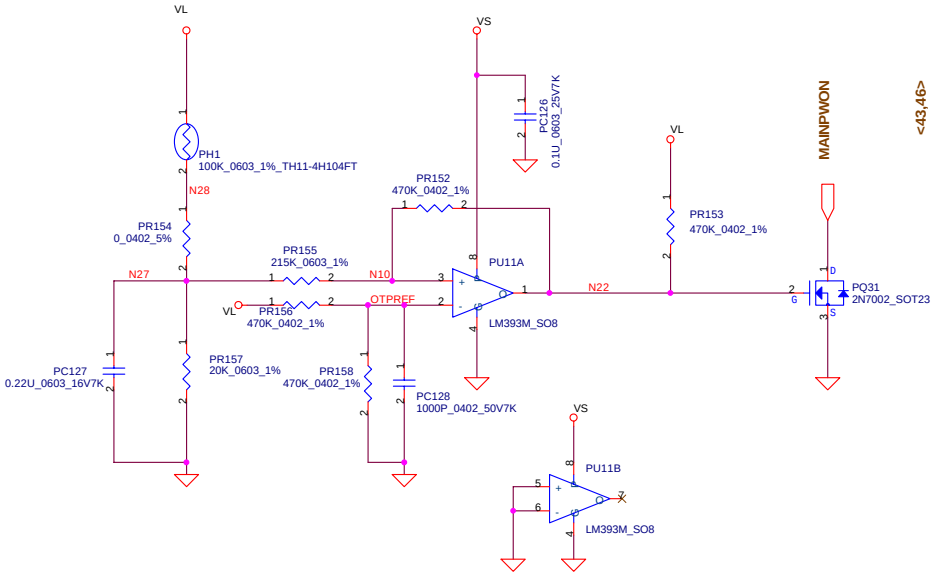

Security Classification	Compal Secret Data		
Issued Date	2005/03/01	Deciphered Date	2006/03/01

THIS SHEET OF ENGINEERING DRAWING IS THE PROPRIETARY PROPERTY OF COMPAL ELECTRONICS, INC. AND CONTAINS CONFIDENTIAL AND TRADE SECRET INFORMATION. THIS SHEET MAY NOT BE TRANSFERED FROM THE CUSTODY OF THE COMPETENT DIVISION OF R&D DEPARTMENT EXCEPT AS AUTHORIZED BY COMPAL ELECTRONICS, INC. NEITHER THIS SHEET NOR THE INFORMATION IT CONTAINS MAY BE USED BY OR DISCLOSED TO ANY THIRD PARTY WITHOUT PRIOR WRITTEN CONSENT OF COMPAL ELECTRONICS, INC.

Compal Electronics, inc.

Title: SCHEMATIC, M/B LA-3181P

Size: Custom | Document Number: 401417 | Rev: B

Date: 星期三, 三月 08, 2006 | Sheet 49 of 54

Version change list (P.I.R. List)

Power section

Item	Reason for change	PG#	Modify List	Date	B.Ver#
1	Add the functionality to turn on the system on from Off and S4 with the consumer IR.	45	Change 3/5VALWP regulator from MAX1902 to MAX1999	2005.04.08	
2	Change PCN1 from SP020022200 to SP020024800.	49	Change PCN1 from SP02000AO00 to DC040001P00.	2005.04.08	
3	Because EMI test fail	48	Change CPU_CORE HI-SIDE MOS from AO4408 to FDS6294, LOW-SIDE from AO4410 to FDS6676AS	2005.05.18	
4	Because V_bat to Calgary havn a leakage current, cause precharge can't finisn.	44	Add PD30 and PD31 to supply the V_bat power.	2005.06.09	
5	Add air-adapter detector	44	Add PU4 to detector air-adapter in.	2005.07.02	
6	Adjust the MB3887 CC to CP response cause the adapter OCP.	44	Change the PR31 from 100k_0402_1% to 10k_0402_1% Change the PR34 from 10k_0402_1% to 2.74k_0402_1% Change the PC21 from 4700p_0603_50V to 0.01u_0603_50v	2005.07.29	

THIS SHEET OF ENGINEERING DRAWING IS THE PROPRIETARY PROPERTY OF COMPAL ELECTRONICS, INC. AND CONTAINS CONFIDENTIAL AND TRADE SECRET INFORMATION. THIS SHEET MAY NOT BE TRANSFERED FROM THE CUSTODY OF THE COMPETENT DIVISION OF R&D DEPARTMENT EXCEPT AS AUTHORIZED BY COMPAL ELECTRONICS, INC. NEITHER THIS SHEET NOR THE INFORMATION IT CONTAINS MAY BE USED BY OR DISCLOSED TO ANY THIRD PARTY WITHOUT PRIOR WRITTEN CONSENT OF COMPAL ELECTRONICS, INC.

	Item	Fixed Issue	Reason for change	PAGE	Modify List	M.B. Ver.
<2005.04.18>	1		HP Jack + SPDIF change type	31 , 33	Del : U27 , C563 , C564 Add: Q52 , Q53 , Q54 , Q56 , Q57 , R571 , C730 , C731 , R567 , R569 , R568 , R570	0.2
	2		Support CIR wake up from battery mode	4 , 37 , 38 , 41 , 35	12VALW change to B+ +3VALW change to LDO3 , +5VALW change to LDO5	0.2
	3		for Marvell express card Rest timing	20 , 28	Add: Q55	0.2
	4		for some HDD's LED alway on	24	Del: D29 , R259 , Q10	0.2
	5		for card bus can't work	27	S1_VCC and S1_VPP change to +S1_VCC and +S1_VPP	0.2
	6		For nissan common design	35	JP28 and JP29 pin swap	0.2
	7		For keyboard issue	37	Del: D27	0.2
<2005.04.27>	1		wake up from LAN	38	Add: R575(Pull UP PME_EC#)	0.3
	2		For VOL_UP,DOWN function issue	38	POP: R418,R419,R420,R421	0.3
<2005.05.3>	1		For CIR wake up	38	Add: R576, R577 to option	0.3
<2005.05.4>	1		EC 910L include portion circuit	39	Add: R578 , Del:C630 , R422 , Q22 , U35A	0.3
	2		ME change LED type	36	D18,D20,D21 from right angle change to vertical type	0.3
<2005.05.6>	1		Add wireless LED current limit resister	17	Add: R581 current limit resister	0.3
<2005.05.9>	1		TP conn pin reverse	35	Pin swap	
<2005.05.10>	1		ME change LED type	36	D25 from right angle change to vertical type	
	2		HP requirement from 75 ohm change to 33 ohm	33	R567 , R569 from 75 ohm change to 33 ohm	
	3		For nissan common design	35	Add: R582 , R583	
<2005.05.11>	1		For 2 way and 4 way touch pad	36	Add: R584 , R585	
<2005.06.10>			update JP23 dual USB connector to reverse type			0.4
			DFX modification for Rev0.4 MB			
			Change MR954, MC928, MR924, MR922, MR932, MC944, MC970, MC976, MC978, MC926 to correct pad size with Compal layout rule			
			update USB connector to reverse type			
			Change D6 form RB411 to RB491			

Security Classification	Compal Secret Data		
Issued Date	2005/03/01	Deciphered Date	2005/04/06

THIS SHEET OF ENGINEERING DRAWING IS THE PROPRIETARY PROPERTY OF COMPAL ELECTRONICS, INC. AND CONTAINS CONFIDENTIAL AND TRADE SECRET INFORMATION. THIS SHEET MAY NOT BE TRANSFERED FROM THE CUSTODY OF THE COMPETENT DIVISION OF R&D DEPARTMENT EXCEPT AS AUTHORIZED BY COMPAL ELECTRONICS, INC. NEITHER THIS SHEET NOR THE INFORMATION IT CONTAINS MAY BE USED BY OR DISCLOSED TO ANY THIRD PARTY WITHOUT PRIOR WRITTEN CONSENT OF COMPAL ELECTRONICS, INC.

Compal Electronics, inc.

Title: SCHEMATIC, M/B LA-3181P

Size: Custom | Document Number: 401417 | Rev: B

Date: 星期三, 三月 08, 2006 | Sheet 51 of 54

	Item	Fixed Issue	Reason for change	PAGE	Modify List	M.B. Ver.
<2005.06.27>	1		For clear H_RST# glitch	41	Add Q61	0.5
<2005.07.04>	1		For +1.8VS EMI	11	Change R61, R84 value from 0 ohm to 120 ohm	0.5
	2		For +1.2V_HT power ripple	14	Change C197, C209, C254, C248, C251, C256, C258 value from 0.1U 16V4Z 0402 to 1U 6.3V4Z 0402	0.5
	3		For +2.5VS EMI	15	Add C737, C738, C741, C742 220P 50V8J 0402	0.5
	4		For +2.5VS EMI	15	Add C739, C740, C743, C744 1000P 50V7K 0402	0.5
	5		For Mini-PCI_CLK EMI	30	Mount R325 and C512	
	6		For CardBus chip PCI_CLK EMI	25	mount R279 and C442	0.5
	7		For LAN chip PCI_CLK EMI	29	Mount R322 and C504	0.5
	8		For EC K/B chip PCI_CLK EMI	30	Mount R415 and C628	
<2005.07.05>	1		For USB EMI	34	Add L33, L34	
	2		For USB EMI	34	change R561,R559,R562,R560 size from 0603 to 0402	
<2005.07.07>	1		For dock Docking audio noise	31	Add Q58, R589, Q60, R590, Q59, R589	
	2		For Dock_LOUTR/L EMI	40	Add R591, C745, R592, C746	
	3		For Docking TV_out signals EMI	40	Add R593, C747, R594, C748,C749, C750, R595, C751, C752	
<2005.07.11>	1		For accelerate +2.5VS discharge speed	40	change R442 size and value from 470_0402 to 10_0805	
	2		For LAN lamp	29	Swap Activity and Link Lamp	
<2005.07.25>	1		For SanDisk SD 256M card could not work issue	25	delete U48 Quick switch reserve schematics	
	2		For SanDisk SD 256M card could not work issue	25	Delete R463, R465, R466, R476, R268	
	3		For SanDisk SD 256M card could not work issue	26	Delete R270, R267, R547, R548	
	4		For SanDisk SD 256M card could not work issue	26	Mount R550 and R549	
<2005.07.28>	1		For lower power consumption	38	Add and un-mount R596	
	2		For CRT Assy	18	change CRT footprint	

Security Classification	Compal Secret Data		
Issued Date	2005/03/01	Deciphered Date	2005/04/06

THIS SHEET OF ENGINEERING DRAWING IS THE PROPRIETARY PROPERTY OF COMPAL ELECTRONICS, INC. AND CONTAINS CONFIDENTIAL AND TRADE SECRET INFORMATION. THIS SHEET MAY NOT BE TRANSFERED FROM THE CUSTODY OF THE COMPETENT DIVISION OF R&D DEPARTMENT EXCEPT AS AUTHORIZED BY COMPAL ELECTRONICS, INC. NEITHER THIS SHEET NOR THE INFORMATION IT CONTAINS MAY BE USED BY OR DISCLOSED TO ANY THIRD PARTY WITHOUT PRIOR WRITTEN CONSENT OF COMPAL ELECTRONICS, INC.

Compal Electronics, inc.

Title: SCHEMATIC, M/B LA-3181P

Size: Custom | Document Number: 401417 | Rev: B

Date: 星期三, 三月 08, 2006 | Sheet 52 of 54

	Item	Fixed Issue	Reason for change	PAGE	Modify List	M.B. Ver.
<2005.08.11>	1		Delect all reserve 0 ohm resistors.	41	Delete R24, R125, R21 , R73 , R263, R565	0.5
	2		For EMI solution on switch connector	11	Add C753~C771 total 19 pcs	0.5
	3		For ATI suggestion on RS480	14	Change C200, C202, C242, C232 from 0.1U 16V4Z 0402 to 1U 6.3V4K 0402	0.5
<2005.08.23>	4		Relocate damping resistor to solve Sandisk issue	15	Relocate R266, R458, R459, R460, R461, R462	0.8
	5		Change from AGND to DGND for Codec precision improvement	15	Change Q16/Q17 pin3 and R334 pin2 to DGND	0.8
	6		Add +3VALW power rail for Boxster lid switch use	30	Add +3VALW to JP28 pin25	0.8
<2005.09.05>	1		EMI Requirement	34	Add Varistor on C756, C757, C758 and Add Caps on C760, C761, C762, C763, C765 (9/5 Cayenne MV)	1A
<2005.09.26>	1		EMI Requirement	34	Add Varistor on C754, C755 and Add Caps on C753, C759, C764, C766, C767, C768, C769, C779, C771 (9/26 Cayenne MV2)	1A
	2		Codec lost issue	31	Add R356, R587, 47Kohm	1B
	3		Codec lost issue	33	Change R359 and R586 to 1Kohm	1B
<2005.10.17>	1		Codec lost issue	31	Add R650 and R651 10Kohm, reserve R652	1B
<2005.10.19>	1		AIR_ACIN function	20	Change AIR_ACIN from pin80 to pin137, add R653 for BID recognization	1B

Security Classification	Compal Secret Data		
Issued Date	2005/03/01	Deciphered Date	2005/04/06

THIS SHEET OF ENGINEERING DRAWING IS THE PROPRIETARY PROPERTY OF COMPAL ELECTRONICS, INC. AND CONTAINS CONFIDENTIAL AND TRADE SECRET INFORMATION. THIS SHEET MAY NOT BE TRANSFERED FROM THE CUSTODY OF THE COMPETENT DIVISION OF R&D DEPARTMENT EXCEPT AS AUTHORIZED BY COMPAL ELECTRONICS, INC. NEITHER THIS SHEET NOR THE INFORMATION IT CONTAINS MAY BE USED BY OR DISCLOSED TO ANY THIRD PARTY WITHOUT PRIOR WRITTEN CONSENT OF COMPAL ELECTRONICS, INC.

Compal Electronics, inc.

Title: SCHEMATIC, M/B LA-3181P

Size: Custom | Document Number: 401417 | Rev: B

Date: 星期三, 三月 08, 2006 | Sheet 53 of 54

LA2772 R01
<2005.11.08>

Item	Fixed Issue	Reason for change	PAGE	Modify List	M.B. Ver.
1		Change power plane to +VCC 480/482 for RS482M	11, 13, 14	Add PJP30 and PJP31	LA2771 R01
2		Reserve R601, SUS_STAT# should be NC if populate RS482M/SB450	20	Resereve R600	LA2771 R01
3		Reserve R71, SUS_STAT# should be NC if populate RS482M/SB450	14	Reserve R71	LA2771 R01
4		To solve Q24 damage issue when plug Tempa2	40	Add D40	LA2771 R01
5		To solve Q24 damage issue when plug Tempa2	15	Add R607	LA2771 R01
6		To distinguish new VRAM to old VRAM (Hynix/Samsung)	20	Add R606 and R605	LA2771 R01
1			20		
1			34		
2			31		
3			33		
1			31		
1					
			40		
3			40		
1			40		
2			29		
1			25		
2			25		
3			26		
4			26		
1			38		
2			18		

Security Classification	Compal Secret Data		
Issued Date	2005/03/01	Deciphered Date	2005/04/06

THIS SHEET OF ENGINEERING DRAWING IS THE PROPRIETARY PROPERTY OF COMPAL ELECTRONICS, INC. AND CONTAINS CONFIDENTIAL AND TRADE SECRET INFORMATION. THIS SHEET MAY NOT BE TRANSFERED FROM THE CUSTODY OF THE COMPETENT DIVISION OF R&D DEPARTMENT EXCEPT AS AUTHORIZED BY COMPAL ELECTRONICS, INC. NEITHER THIS SHEET NOR THE INFORMATION IT CONTAINS MAY BE USED BY OR DISCLOSED TO ANY THIRD PARTY WITHOUT PRIOR WRITTEN CONSENT OF COMPAL ELECTRONICS, INC.

Compal Electronics, inc.

Title: SCHEMATIC, M/B LA-3181P

Size: Custom | Document Number: 401417 | Rev: B

Date: 星期三, 三月 08, 2006 | Sheet 54 of 54