# Compal Confidential

**Model Name : EAL30**
**File Name : LA-2691**

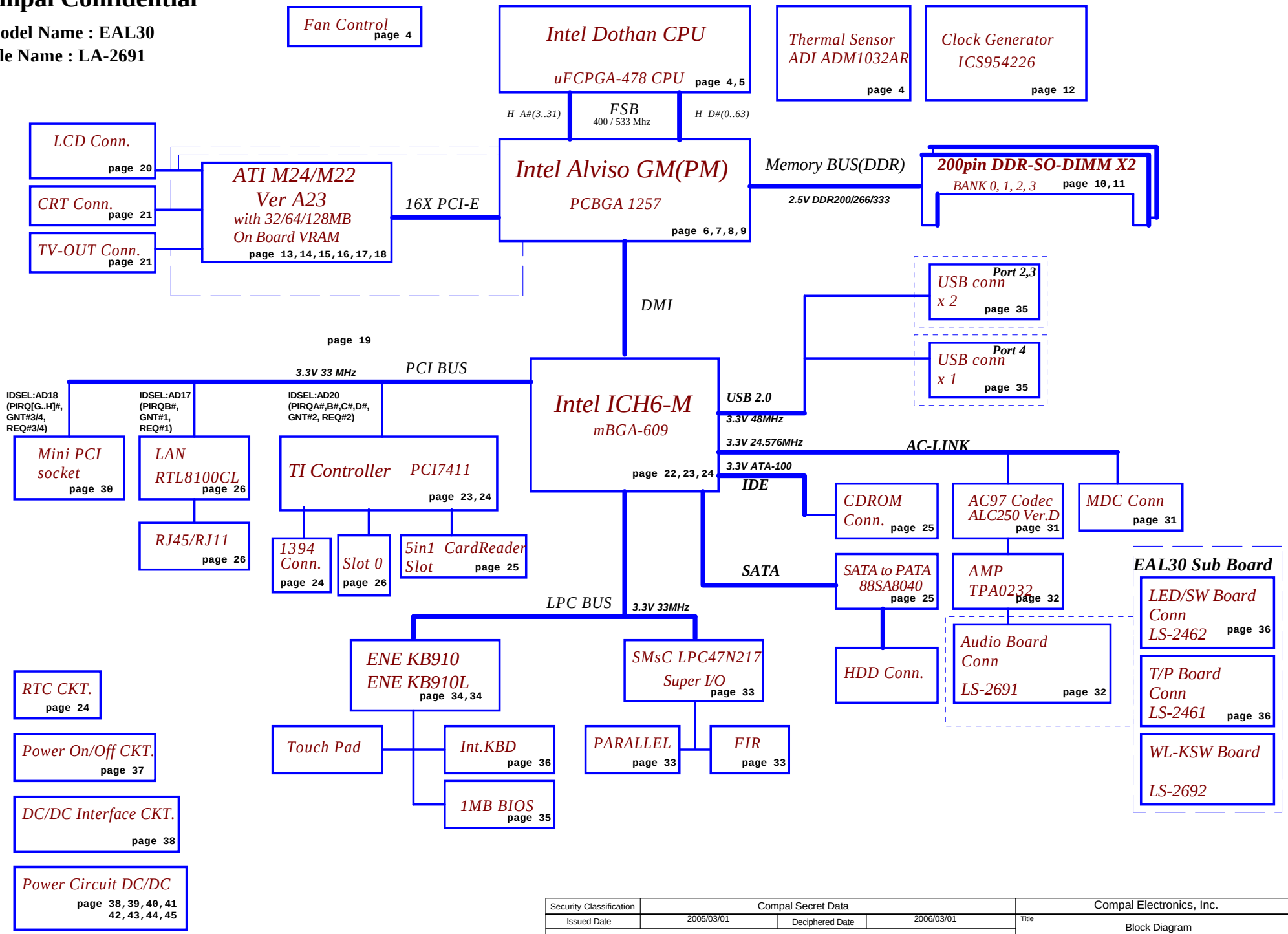


| Security Classification | Compal Secret Data | | |
|---|---|---|---|
| Issued Date | 2005/03/01 | Deciphered Date | 2006/03/01 |

THIS SHEET OF ENGINEERING DRAWING IS THE PROPRIETARY PROPERTY OF COMPAL ELECTRONICS, INC. AND CONTAINS CONFIDENTIAL AND TRADE SECRET INFORMATION. THIS SHEET MAY NOT BE TRANSFERED FROM THE CUSTODY OF THE COMPETENT DIVISION OF R&D DEPARTMENT EXCEPT AS AUTHORIZED BY COMPAL ELECTRONICS, INC. NEITHER THIS SHEET NOR THE INFORMATION IT CONTAINS MAY BE USED BY OR DISCLOSED TO ANY THIRD PARTY WITHOUT PRIOR WRITTEN CONSENT OF COMPAL ELECTRONICS, INC.

Compal Electronics, Inc.

Title: Block Diagram

Size: Custom | Document Number: EAL30 LA-2691 | Rev: 1.0

Date: 星 期, 三月 03, 2005 | Sheet 1 of 52

# Compal Confidential

# Fortworth Alviso
# EAL30 LA-2691 Schematic

## uFC-PGA Dothan / 915 PM/GM/910GML
## ATI M24/M24C/M22 Ver A23 with 64M/128M VRAM / ICH6-M

## 2005-03-01

**REV:1.0**

| | | | |
|---|---|---|---|
| Security Classification | Compal Secret Data | | |
| Issued Date | 2005/03/01 | Deciphered Date | 2006/03/01 |

THIS SHEET OF ENGINEERING DRAWING IS THE PROPRIETARY PROPERTY OF COMPAL ELECTRONICS, INC. AND CONTAINS CONFIDENTIAL AND TRADE SECRET INFORMATION. THIS SHEET MAY NOT BE TRANSFERED FROM THE CUSTODY OF THE COMPETENT DIVISION OF R&D DEPARTMENT EXCEPT AS AUTHORIZED BY COMPAL ELECTRONICS, INC. NEITHER THIS SHEET NOR THE INFORMATION IT CONTAINS MAY BE USED BY OR DISCLOSED TO ANY THIRD PARTY WITHOUT PRIOR WRITTEN CONSENT OF COMPAL ELECTRONICS, INC.

Compal Electronics, Inc.

Title: Cover Sheet

Size: Custom | Document Number: EAL30 LA-2691 | Rev: 1.0

Date: 星期五, 三月 04, 2005 | Sheet 1 of 52

## Voltage Rails

| Power Plane | Description | S0-S1 | S3 | S5 |
|---|---|---|---|---|
| VIN | Adapter power supply (19V) | N/A | N/A | N/A |
| B+ | AC or battery power rail for power circuit | N/A | N/A | N/A |
| +CPU_CORE | Core voltage for CPU | ON | OFF | OFF |
| +1.05VS | 1.05V rail for Processor I/O | ON | OFF | OFF |
| +1.25VS | 1.25V switched power rail for DDR Vtt | ON | OFF | OFF |
| +VGA_CORE | 1.2V/1.0V switched power rail for VGA core power | ON | OFF | OFF |
| +1.2VS | 1.2V for VGA PCIE power | ON | OFF | OFF |
| +1.5VALW | 1.5V always on power rail | ON | ON | ON* |
| +1.5VS | 1.5V switched power rail | ON | OFF | OFF |
| +1.8VS | 1.8V switched power rail for VGA frame buffer | ON | OFF | OFF |
| +2.5V | 2.5V power rail for system DDR | ON | ON | OFF |
| +3VALW | 3.3V always on power rail | ON | ON | ON* |
| +3V | 3.3V switched power rail | ON | ON | OFF |
| +3VS | 3.3V switched power rail | ON | OFF | OFF |
| +5VALW | 5V always on power rail | ON | ON | ON* |
| +5VS | 5V switched power rail | ON | OFF | OFF |
| +12VALW | 12V always on power rail | ON | ON | ON* |
| RTCVCC | RTC power | ON | ON | ON* |

Note : ON* means that this power plane is ON only with AC power available, otherwise it is OFF.

## ICH6-M I2C / SMBUS ADDRESSING

| DEVICE | HEX | ADDRESS |
|---|---|---|
| DDR SO-DIMM 0 | A0 | 1 0 1 0 0 0 0 X |
| DDR SO-DIMM 1 | A2 | 1 0 1 0 0 0 1 X |
| CLOCK GENERATOR (EXT.) | D2 | 1 1 0 1 0 0 1 X |

## KB910 I2C / SMBUS ADDRESSING

| DEVICE | HEX | ADDRESS |
|---|---|---|
| SM1 24C16 | A0H | 1 0 1 0 0 0 0 X b |
| SM1 SMART BATTERY | 16H | 0 0 0 1 0 1 1 X b |
| SM2 ADM0132 CPU THERMAL MONITOR | 98H | 1 0 0 1 1 0 0 X b |
| SM2 ALC250 codec | 00H | 0 0 0 0 0 0 0 X b |

## External PCI Devices

| DEVICE | PCI Device ID | IDSEL # | REQ/GNT # | PIRQ |
|---|---|---|---|---|
| 1394 | D0 | AD20 | 2 | A,B,C,D |
| LAN | D1 | AD17 | 3 | F |
| CARD BUS | D4 | AD20 | 2 | A,B,C,D |
| 5IN1 | D4 | AD20 | 2 | A,B,C,D |
| Mini-PCI | D2 | AD18 | 1 | G,H |

## Symbol note:

:means digital ground.

:means analog ground.

@ :means reserved.

## Fortworth Alviso Comparison Table

| Item | * Descrite | UMA | Page |
|---|---|---|---|
| VGA | ATi M22P/24P | UMA | 15 ~ 18 |
| VRAM | 128MB/64MB | N/A | 19 ~ 20 |

## Board ID Table for AD channel

| | |
|---|---|
| Vcc | 3.3V +/- 5% |
| Ra | 10K +/- 5% |

| BID/PID | Rb/Rc | $V_{AD_BID}$ min | $V_{AD_BID}$ typ | $V_{AD_BID}$ max |
|---|---|---|---|---|
| 0 | 0 | 0 V | 0 V | 0.1 V |
| 1 | 8.2K +/- 5% | 1.412 V | 1.486 V | 1.560 V |
| 2 | 18K +/- 5% | 2.015 V | 2.121 V | 2.227 V |
| 3 | 33K +/- 5% | 2.406 V | 2.533 V | 2.659 V |
| 4 | 56K +/- 5% | 2.660 V | 2.800 V | 2.940 V |
| 5 | NC | 3.135 V | 3.300 V | 3.465 V |
| | | | | |
| | | | | |

| Board ID | PCB Revision |
|---|---|
| * 0 | 0.1 |
| 1 | |
| 2 | |
| 3 | |
| 4 | |
| 5 | |
| 6 | |
| 7 | |

| Security Classification | Compal Secret Data | | | Compal Electronics, Inc. |
|---|---|---|---|---|
| Issued Date | 2005/03/01 | Deciphered Date | 2006/03/01 | Title: Notes List |
| | | | | Size: Document Number: EAL30 LA-2691 Rev: 1.0 |
| | | | | Date: 星期四, 三月 03, 2005 Sheet 3 of 52 |

THIS SHEET OF ENGINEERING DRAWING IS THE PROPRIETARY PROPERTY OF COMPAL ELECTRONICS, INC. AND CONTAINS CONFIDENTIAL AND TRADE SECRET INFORMATION. THIS SHEET MAY NOT BE TRANSFERRED FROM THE CUSTODY OF THE COMPETENT DIVISION OF R&D DEPARTMENT EXCEPT AS AUTHORIZED BY COMPAL ELECTRONICS, INC. NEITHER THIS SHEET NOR THE INFORMATION IT CONTAINS MAY BE USED BY OR DISCLOSED TO ANY THIRD PARTY WITHOUT PRIOR WRITTEN CONSENT OF COMPAL ELECTRONICS, INC.

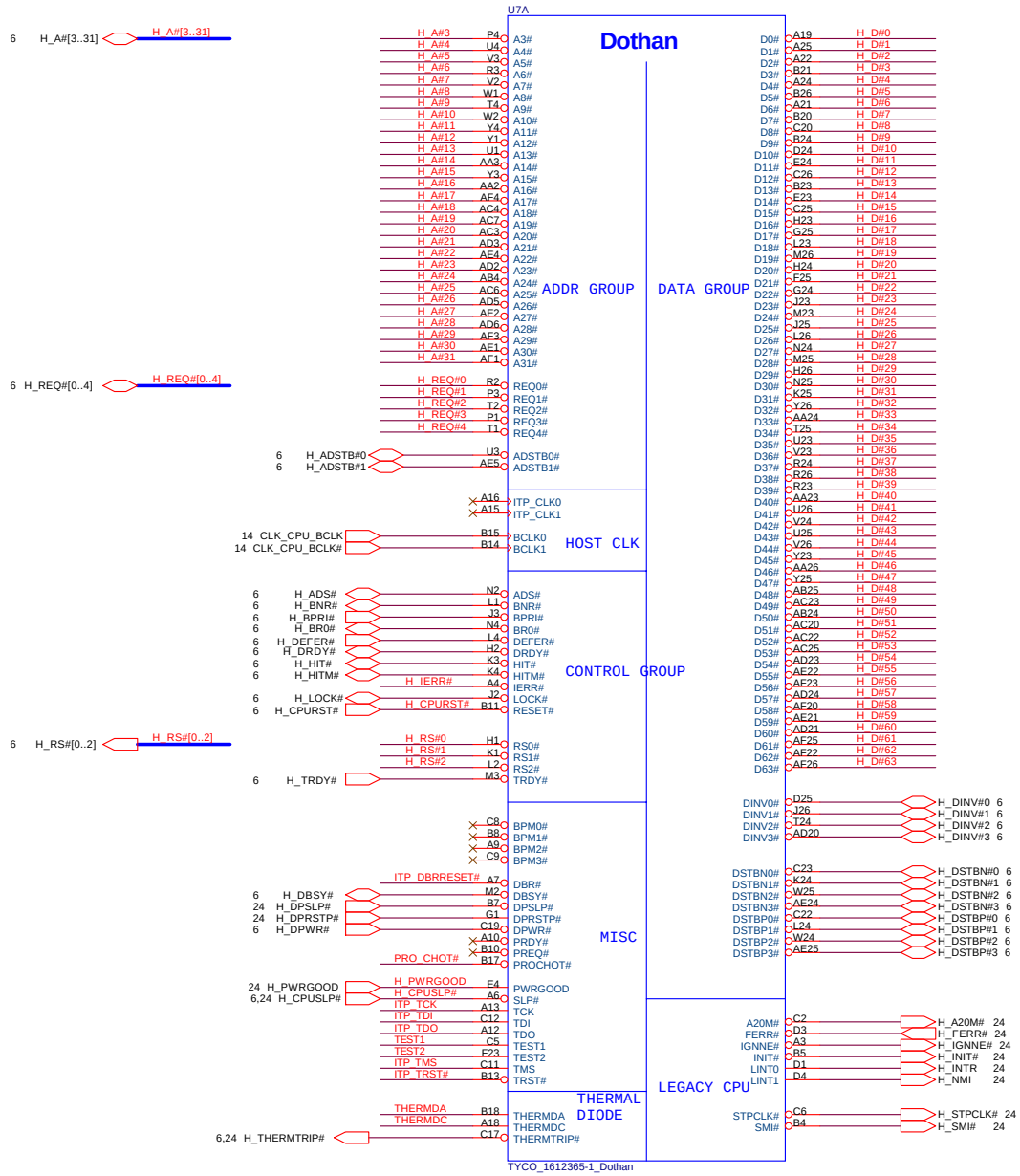


THERMDA & THERMDC Trace / Space = 10 / 10 mil

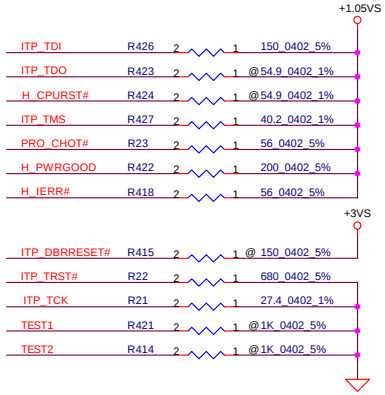


## Reserve For Testability

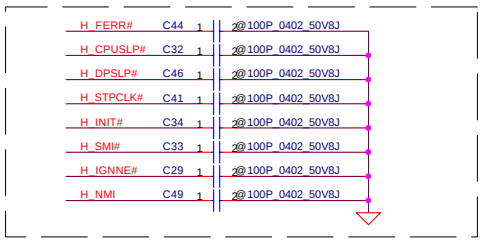


## Thermal Sensor ADI ADM1032AR

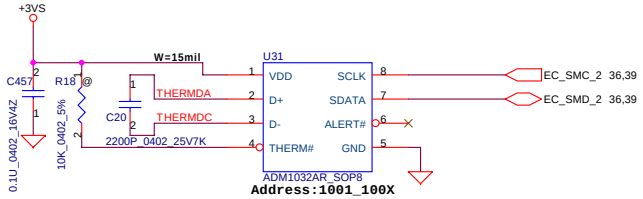


## Fan Control circuit

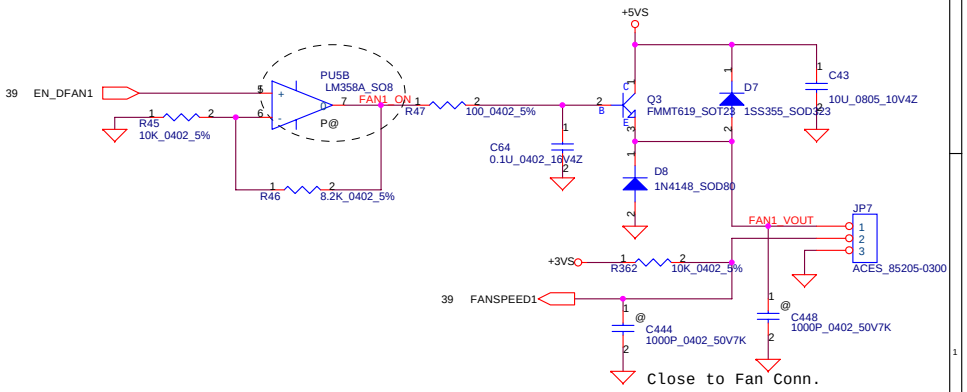


| Security Classification | Compal Secret Data | | |
|---|---|---|---|
| Issued Date | 2005/03/01 | Deciphered Date | 2006/03/01 |

THIS SHEET OF ENGINEERING DRAWING IS THE PROPRIETARY PROPERTY OF COMPAL ELECTRONICS, INC. AND CONTAINS CONFIDENTIAL AND TRADE SECRET INFORMATION. THIS SHEET MAY NOT BE TRANSFERED FROM THE CUSTODY OF THE COMPETENT DIVISION OF R&D DEPARTMENT EXCEPT AS AUTHORIZED BY COMPAL ELECTRONICS, INC. NEITHER THIS SHEET NOR THE INFORMATION IT CONTAINS MAY BE USED BY OR DISCLOSED TO ANY THIRD PARTY WITHOUT PRIOR WRITTEN CONSENT OF COMPAL ELECTRONICS, INC.

**Compal Electronics, Inc.**

Title: INTEL Dothan(1/2)

Size | Document Number: EAL30 LA-2691 | Rev 1.0

Date: 星期四, 三月 03, 2005 | Sheet 4 of 52

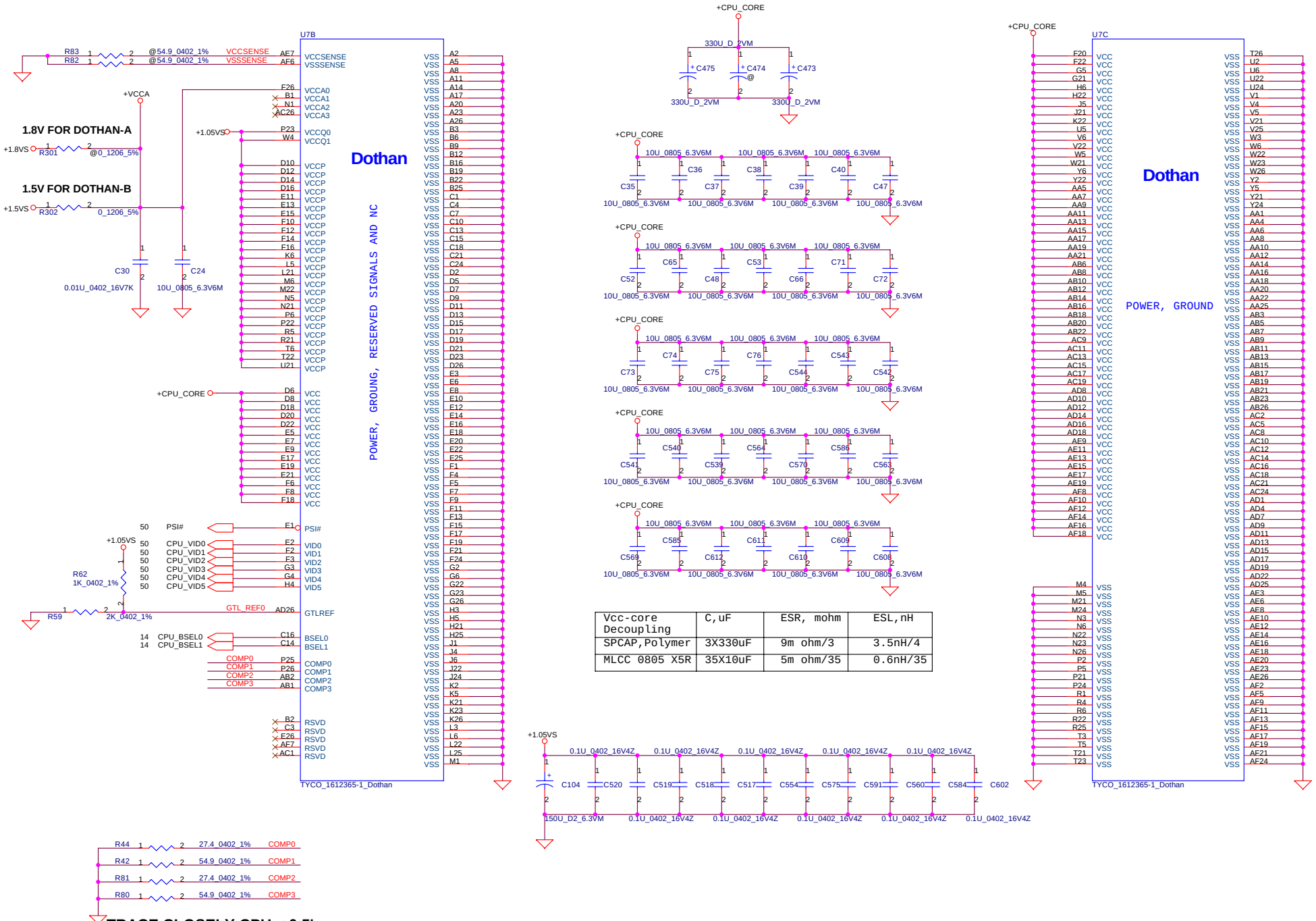


| Vcc-core Decoupling | C,uF | ESR, mohm | ESL,nH |
|---|---|---|---|
| SPCAP,Polymer | 3X330uF | 9m ohm/3 | 3.5nH/4 |
| MLCC 0805 X5R | 35X10uF | 5m ohm/35 | 0.6nH/35 |

**TRACE CLOSELY CPU < 0.5'**
**COMP0, COMP2 layout : Width 18mils and Space 25mils**
**COMP1, COMP3 layout : Space 25mils**

| Security Classification | Compal Secret Data | | |
|---|---|---|---|
| Issued Date | 2006/03/01 | Deciphered Date | 2005/03/01 |

THIS SHEET OF ENGINEERING DRAWING IS THE PROPRIETARY PROPERTY OF COMPAL ELECTRONICS, INC. AND CONTAINS CONFIDENTIAL AND TRADE SECRET INFORMATION. THIS SHEET MAY NOT BE TRANSFERED FROM THE CUSTODY OF THE COMPETENT DIVISION OF R&D DEPARTMENT EXCEPT AS AUTHORIZED BY COMPAL ELECTRONICS, INC. NEITHER THIS SHEET NOR THE INFORMATION IT CONTAINS MAY BE USED BY OR DISCLOSED TO ANY THIRD PARTY WITHOUT PRIOR WRITTEN CONSENT OF COMPAL ELECTRONICS, INC.

**Compal Electronics, Inc.**

Title: INTEL Dothan(2/2)

Size | Document Number: EAL30 LA-2691 | Rev 1.0

Date: 星期四, 三月 03, 2005 | Sheet 5 of 52

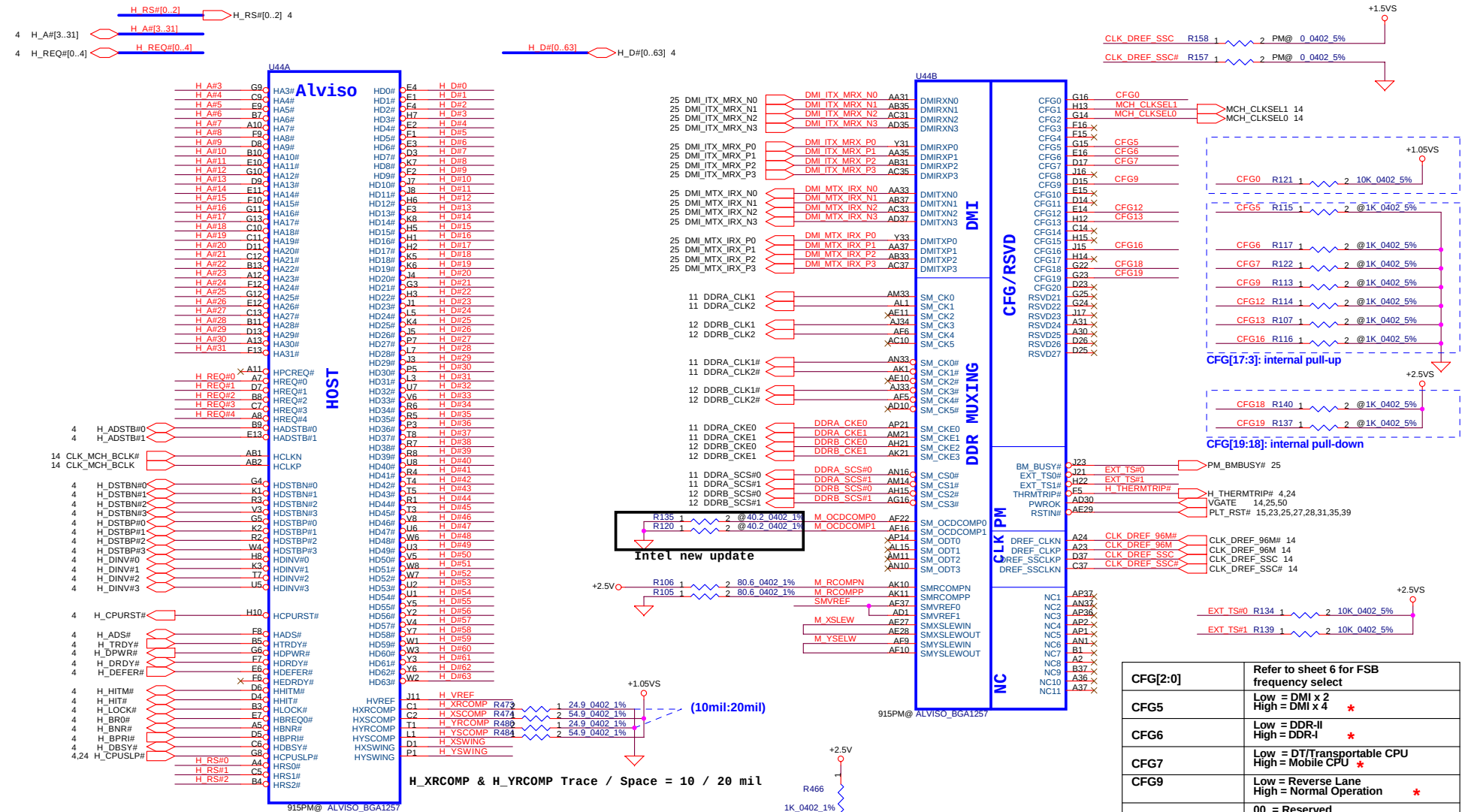


| | |
|---|---|
| CFG[2:0] | Refer to sheet 6 for FSB frequency select |
| CFG5 | Low = DMI x 2<br>High = DMI x 4 * |
| CFG6 | Low = DDR-II<br>High = DDR-I * |
| CFG7 | Low = DT/Transportable CPU<br>High = Mobile CPU * |
| CFG9 | Low = Reverse Lane<br>High = Normal Operation * |
| CFG[13:12] | 00 = Reserved<br>01 = XOR Mode Enabled<br>10 = All Z Mode Enabled<br>11 = Normal Operation (Default) * |
| CFG16<br>(FSB Dynamic ODT) | Low = Disabled<br>High = Enabled * |
| CFG18<br>(VCC Select) | Low = 1.05V (Default) *<br>High = 1.5V |
| CFG19<br>(VTT Select) | Low = 1.05V (Default) *<br>High = 1.2V |

| | | | |
|---|---|---|---|
| Security Classification | Compal Secret Data | | |
| Issued Date | 2005/03/01 | Deciphered Date | 2006/03/01 |

THIS SHEET OF ENGINEERING DRAWING IS THE PROPRIETARY PROPERTY OF COMPAL ELECTRONICS, INC. AND CONTAINS CONFIDENTIAL AND TRADE SECRET INFORMATION. THIS SHEET MAY NOT BE TRANSFERED FROM THE CUSTODY OF THE COMPETENT DIVISION OF R&D DEPARTMENT EXCEPT AS AUTHORIZED BY COMPAL ELECTRONICS, INC. NEITHER THIS SHEET NOR THE INFORMATION IT CONTAINS MAY BE USED BY OR DISCLOSED TO ANY THIRD PARTY WITHOUT PRIOR WRITTEN CONSENT OF COMPAL ELECTRONICS, INC.

**Compal Electronics, Inc.**

Title: INTEL Alviso HOST(1/5)

Size: | Document Number: EAL30 LA-2691 | Rev: 1.0

Date: 星期四, 三月 03, 2005 | Sheet 6 of 52

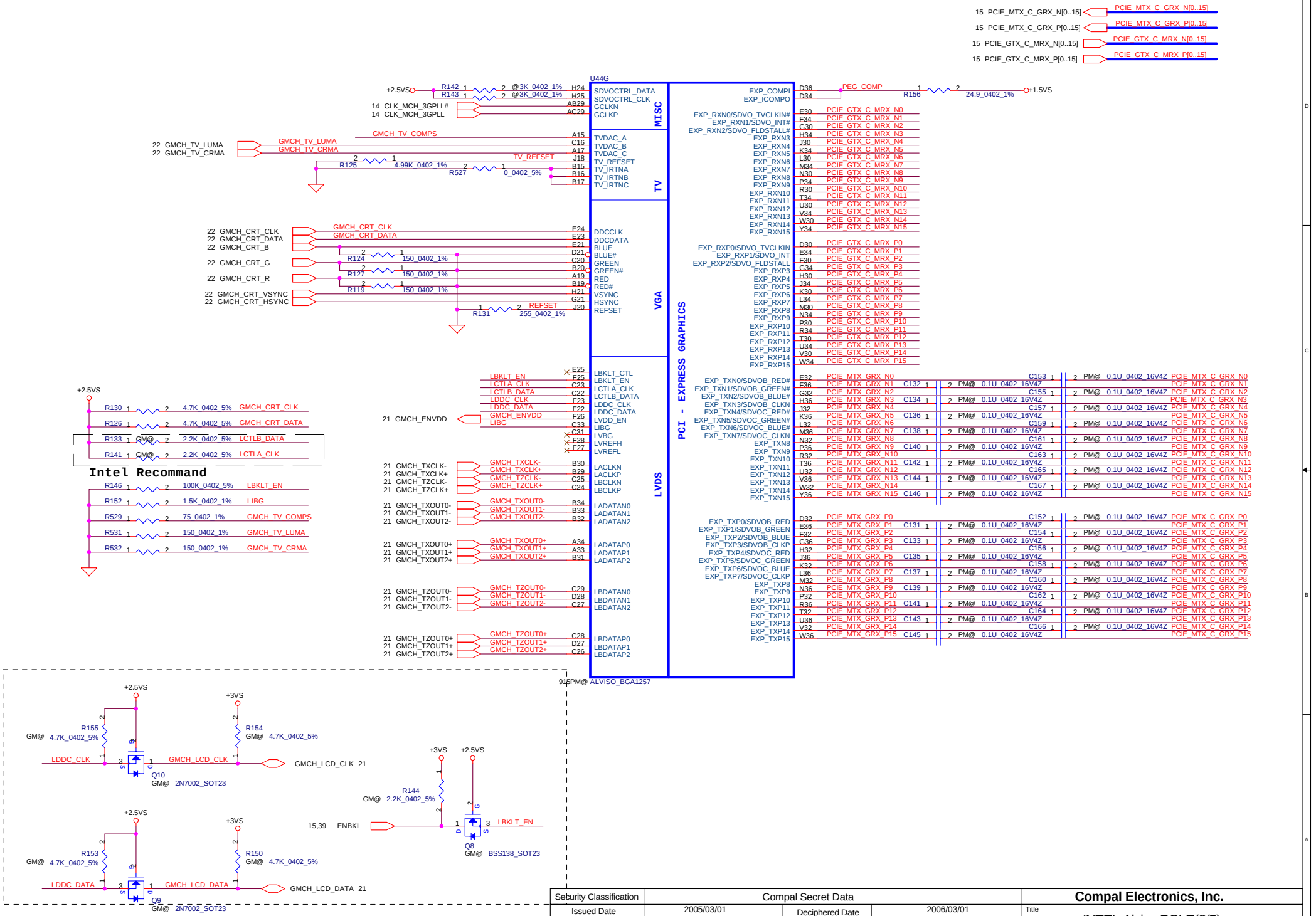


| Security Classification | Compal Secret Data | | |
|---|---|---|---|
| Issued Date | 2005/03/01 | Deciphered Date | 2006/03/01 |

THIS SHEET OF ENGINEERING DRAWING IS THE PROPRIETARY PROPERTY OF COMPAL ELECTRONICS, INC. AND CONTAINS CONFIDENTIAL AND TRADE SECRET INFORMATION. THIS SHEET MAY NOT BE TRANSFERED FROM THE CUSTODY OF THE COMPETENT DIVISION OF R&D DEPARTMENT EXCEPT AS AUTHORIZED BY COMPAL ELECTRONICS, INC. NEITHER THIS SHEET NOR THE INFORMATION IT CONTAINS MAY BE USED BY OR DISCLOSED TO ANY THIRD PARTY WITHOUT PRIOR WRITTEN CONSENT OF COMPAL ELECTRONICS, INC.

**Compal Electronics, Inc.**

Title: INTEL Alviso PCI-E(2/5)

Size: | Document Number: EAL30 LA-2691 | Rev: 1.0

Date: 星期四, 三月 03, 2005 | Sheet 7 of 52

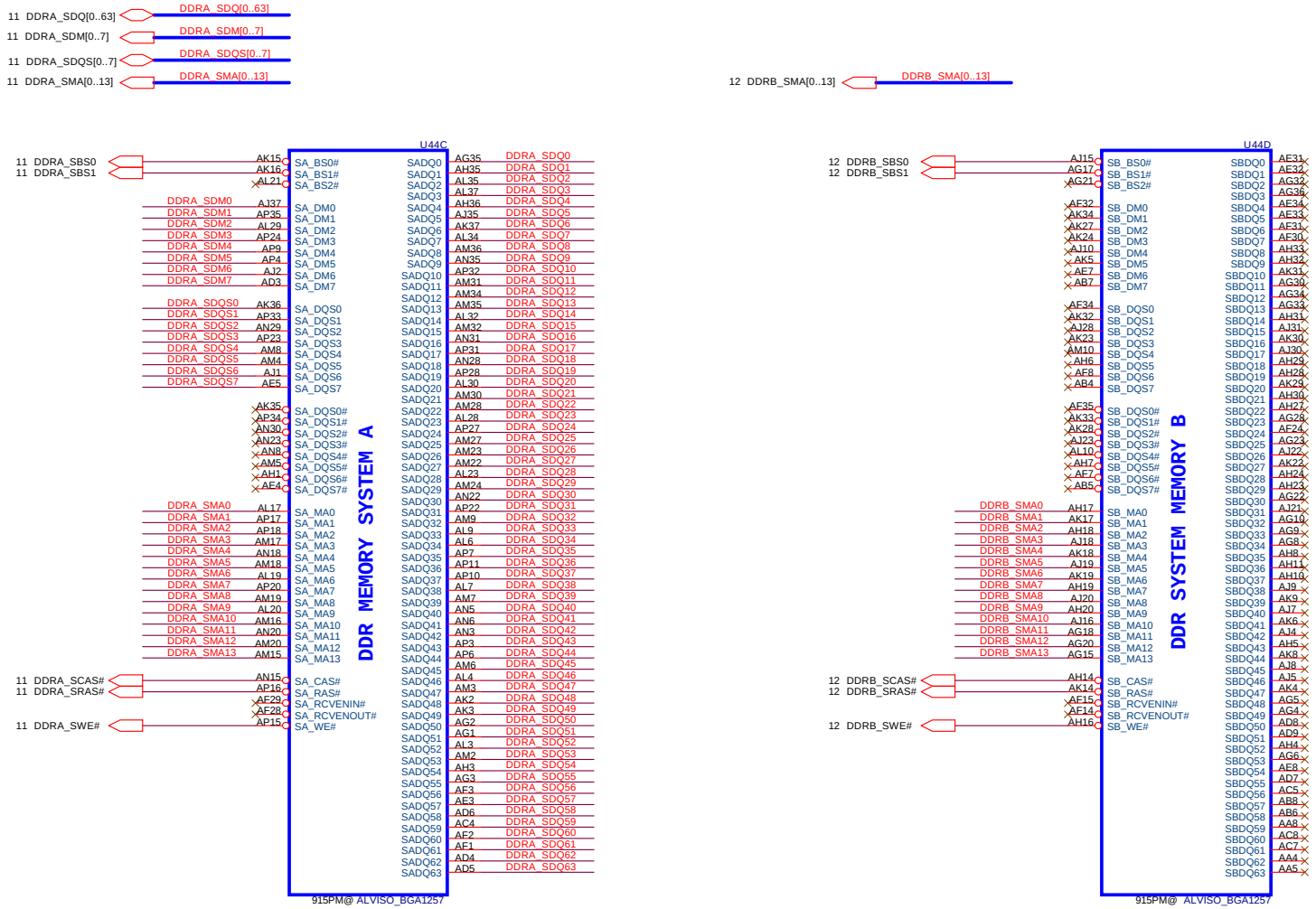


| Security Classification | Compal Secret Data | | |
|---|---|---|---|
| Issued Date | 2005/03/01 | Deciphered Date | 2006/03/01 |

THIS SHEET OF ENGINEERING DRAWING IS THE PROPRIETARY PROPERTY OF COMPAL ELECTRONICS, INC. AND CONTAINS CONFIDENTIAL AND TRADE SECRET INFORMATION. THIS SHEET MAY NOT BE TRANSFERED FROM THE CUSTODY OF THE COMPETENT DIVISION OF R&D DEPARTMENT EXCEPT AS AUTHORIZED BY COMPAL ELECTRONICS, INC. NEITHER THIS SHEET NOR THE INFORMATION IT CONTAINS MAY BE USED BY OR DISCLOSED TO ANY THIRD PARTY WITHOUT PRIOR WRITTEN CONSENT OF COMPAL ELECTRONICS, INC.

**Compal Electronics, Inc.**

Title: INTEL Alviso DDR(3/5)

Size | Document Number: EAL30 LA-2691 | Rev 1.0

Date: 星期四, 三月 03, 2005 | Sheet 8 of 52

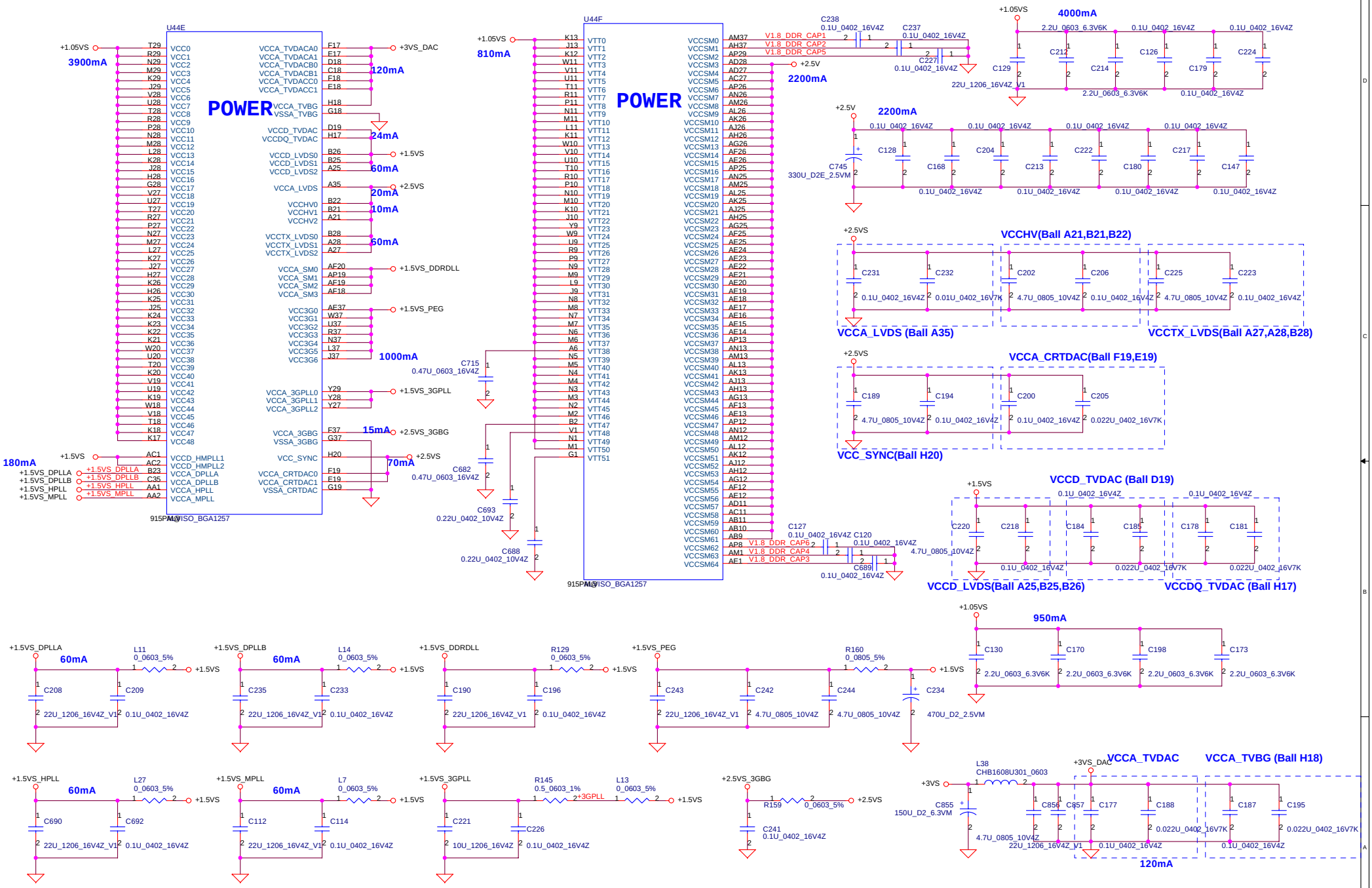


| Security Classification | Compal Secret Data | | |
|---|---|---|---|
| Issued Date | 2005/03/01 | Deciphered Date | 2006/03/01 |

THIS SHEET OF ENGINEERING DRAWING IS THE PROPRIETARY PROPERTY OF COMPAL ELECTRONICS, INC. AND CONTAINS CONFIDENTIAL AND TRADE SECRET INFORMATION. THIS SHEET MAY NOT BE TRANSFERED FROM THE CUSTODY OF THE COMPETENT DIVISION OF R&D DEPARTMENT EXCEPT AS AUTHORIZED BY COMPAL ELECTRONICS, INC. NEITHER THIS SHEET NOR THE INFORMATION IT CONTAINS MAY BE USED BY OR DISCLOSED TO ANY THIRD PARTY WITHOUT PRIOR WRITTEN CONSENT OF COMPAL ELECTRONICS, INC.

**Compal Electronics, Inc.**

Title: INTEL Alviso POWER(4/5)

Size | Document Number: EAL30 LA-2691 | Rev: 1.0

Date: 星期四, 三月 03, 2005 | Sheet 9 of 52

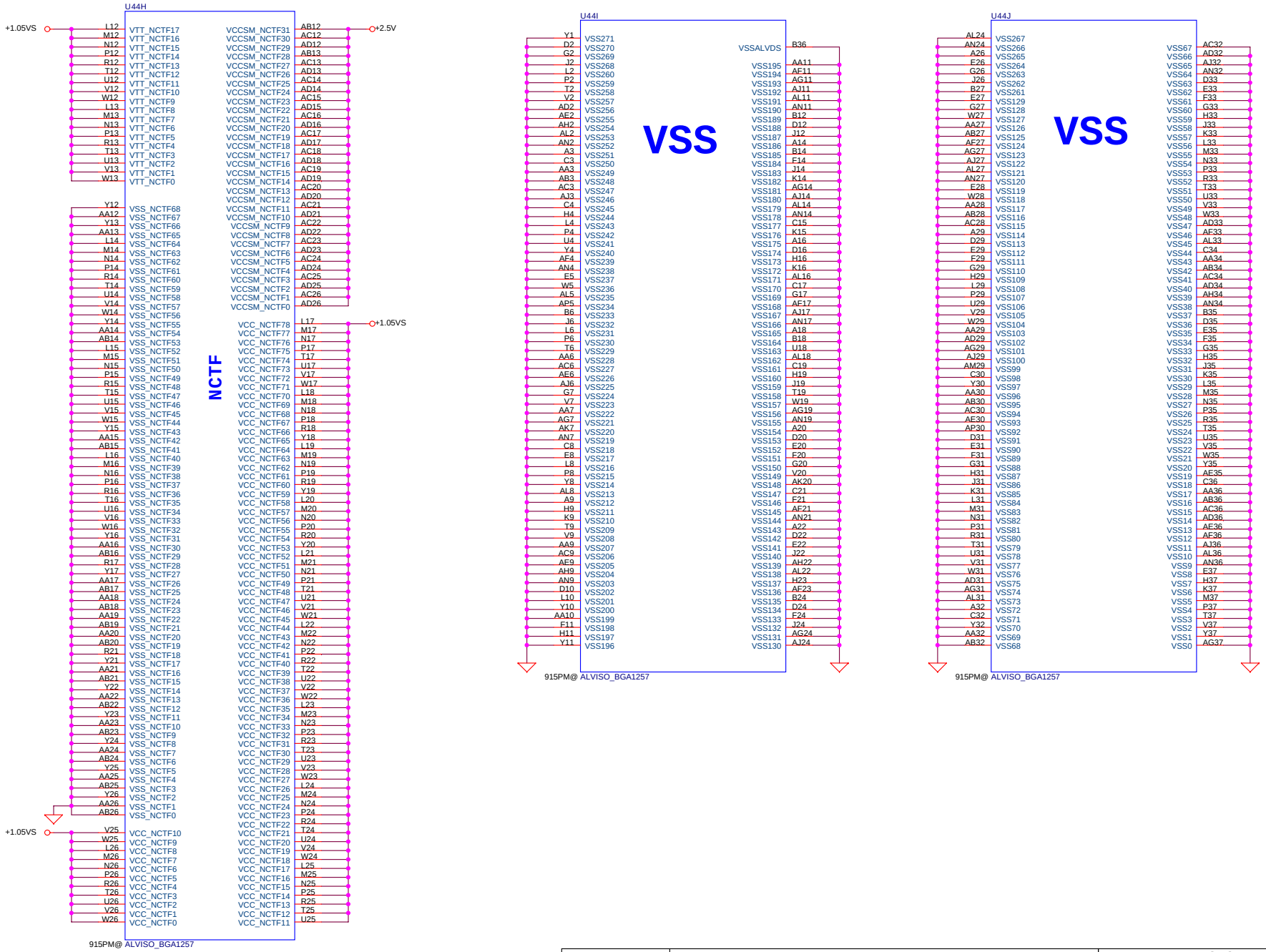


| Security Classification | Compal Secret Data | | Compal Electronics, Inc. |
|---|---|---|---|
| Issued Date | | Deciphered Date | Title: INTEL Alviso POWER(5/5) |
| | | | Size: Document Number: EAL30 LA-2691 — Rev 1.0 |
| | | | Date: 星期四, 三月 03, 2005 — Sheet 10 of 52 |

THIS SHEET OF ENGINEERING DRAWING IS THE PROPRIETARY PROPERTY OF COMPAL ELECTRONICS, INC. AND CONTAINS CONFIDENTIAL AND TRADE SECRET INFORMATION. THIS SHEET MAY NOT BE TRANSFERED FROM THE CUSTODY OF THE COMPETENT DIVISION OF R&D DEPARTMENT EXCEPT AS AUTHORIZED BY COMPAL ELECTRONICS, INC. NEITHER THIS SHEET NOR THE INFORMATION IT CONTAINS MAY BE USED BY OR DISCLOSED TO ANY THIRD PARTY WITHOUT PRIOR WRITTEN CONSENT OF COMPAL ELECTRONICS, INC.

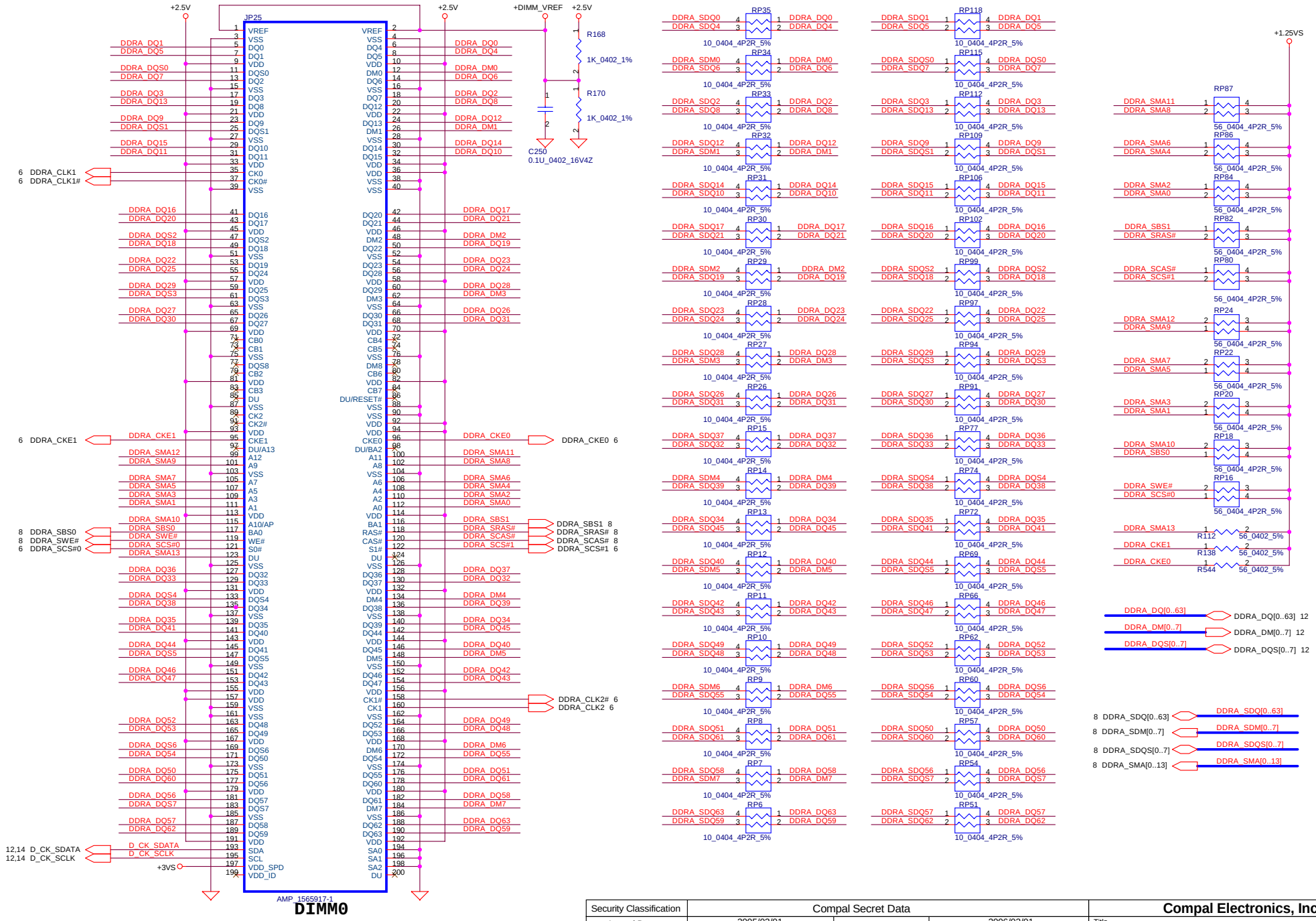


| Security Classification | Compal Secret Data | | |
|---|---|---|---|
| Issued Date | 2005/03/01 | Deciphered Date | 2006/03/01 |

THIS SHEET OF ENGINEERING DRAWING IS THE PROPRIETARY PROPERTY OF COMPAL ELECTRONICS, INC. AND CONTAINS CONFIDENTIAL AND TRADE SECRET INFORMATION. THIS SHEET MAY NOT BE TRANSFERED FROM THE CUSTODY OF THE COMPETENT DIVISION OF R&D DEPARTMENT EXCEPT AS AUTHORIZED BY COMPAL ELECTRONICS, INC. NEITHER THIS SHEET NOR THE INFORMATION IT CONTAINS MAY BE USED BY OR DISCLOSED TO ANY THIRD PARTY WITHOUT PRIOR WRITTEN CONSENT OF COMPAL ELECTRONICS, INC.

**Compal Electronics, Inc.**

Title: DDR-SODIMM0

Size | Document Number: EAL30 LA-2691 | Rev 1.0

Date: 星期四, 三月 03, 2005 | Sheet 11 of 52

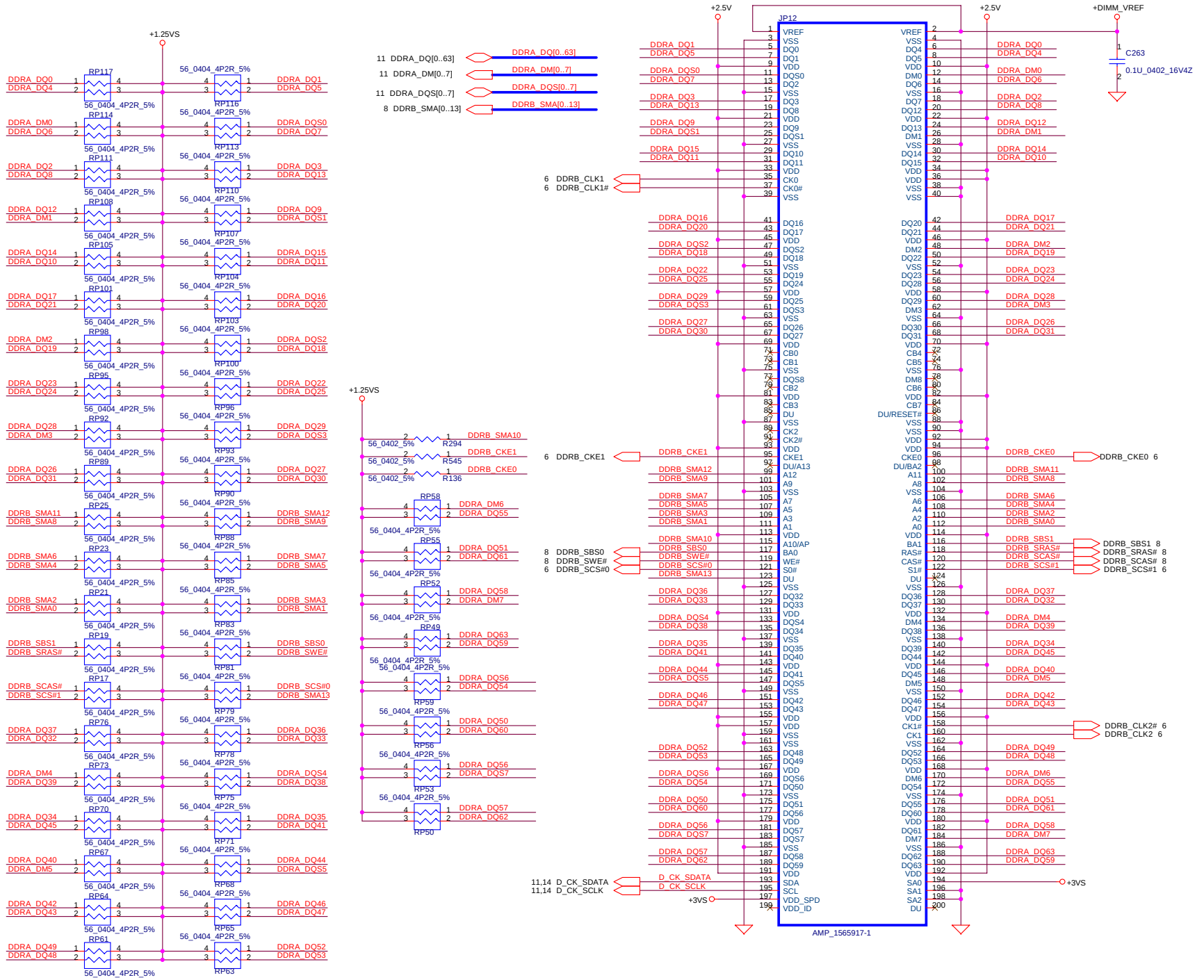


| Security Classification | Compal Secret Data | | |
|---|---|---|---|
| Issued Date | 2005/03/01 | Deciphered Date | 2006/03/01 |

THIS SHEET OF ENGINEERING DRAWING IS THE PROPRIETARY PROPERTY OF COMPAL ELECTRONICS, INC. AND CONTAINS CONFIDENTIAL AND TRADE SECRET INFORMATION. THIS SHEET MAY NOT BE TRANSFERED FROM THE CUSTODY OF THE COMPETENT DIVISION OF R&D DEPARTMENT EXCEPT AS AUTHORIZED BY COMPAL ELECTRONICS, INC. NEITHER THIS SHEET NOR THE INFORMATION IT CONTAINS MAY BE USED BY OR DISCLOSED TO ANY THIRD PARTY WITHOUT PRIOR WRITTEN CONSENT OF COMPAL ELECTRONICS, INC.

**Compal Electronics, Inc.**

Title: DDR-SODIMM1

Size | Document Number: EAL30 LA-2691 | Rev: 1.0

Date: 星期四, 三月 03, 2005 | Sheet 12 of 52

**Layout note :**

**Distribute as close as possible to DDR-SODIMM.**

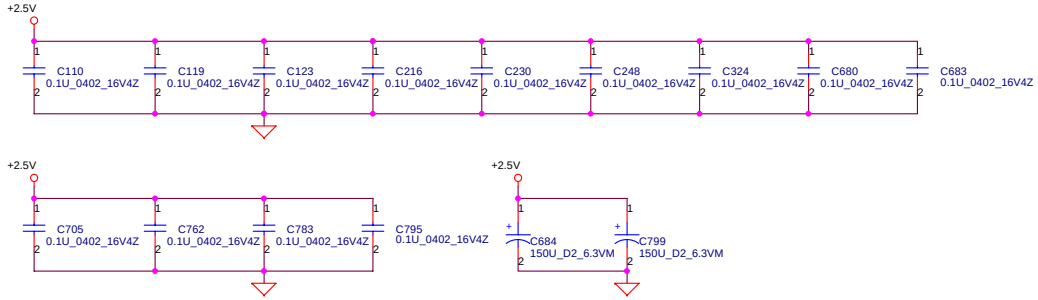


**Layout note :**

**Place one cap close to every 2 pull up resistors termination to +1.25V**

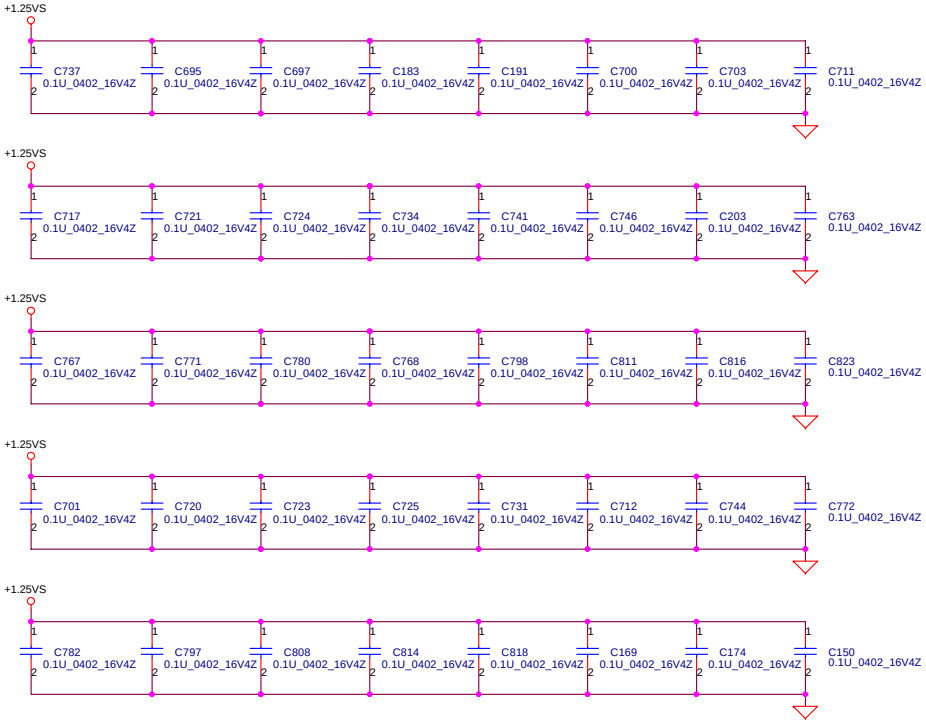


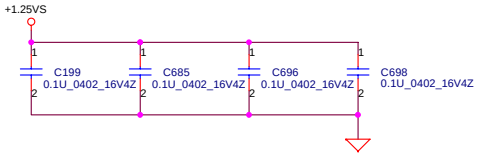


| | | | |
|---|---|---|---|
| Security Classification | Compal Secret Data | | |
| Issued Date | 2005/03/01 | Deciphered Date | 2006/03/01 |

THIS SHEET OF ENGINEERING DRAWING IS THE PROPRIETARY PROPERTY OF COMPAL ELECTRONICS, INC. AND CONTAINS CONFIDENTIAL AND TRADE SECRET INFORMATION. THIS SHEET MAY NOT BE TRANSFERED FROM THE CUSTODY OF THE COMPETENT DIVISION OF R&D DEPARTMENT EXCEPT AS AUTHORIZED BY COMPAL ELECTRONICS, INC. NEITHER THIS SHEET NOR THE INFORMATION IT CONTAINS MAY BE USED BY OR DISCLOSED TO ANY THIRD PARTY WITHOUT PRIOR WRITTEN CONSENT OF COMPAL ELECTRONICS, INC.

**Compal Electronics, Inc.**

Title: DDR SODIMM Decoupling

Size | Document Number: EAL30 LA-2691 | Rev 1.0

Date: 星期四, 三月 03, 2005 | Sheet 13 of 52

# Clock Generator

| FSC CLKSEL0 | FSB CLKSEL1 | FSA CLKSEL2 | CPU MHz | SRC MHz | PCI MHz |
|---|---|---|---|---|---|
| 1 | 0 | 1 | 100 | 100 | 33.3 |
| 0 | 0 | 1 | 133 | 100 | 33.3 |
| 0 | 1 | 1 | 166 | 100 | 33.3 |
| 0 | 1 | 0 | 200 | 100 | 33.3 |

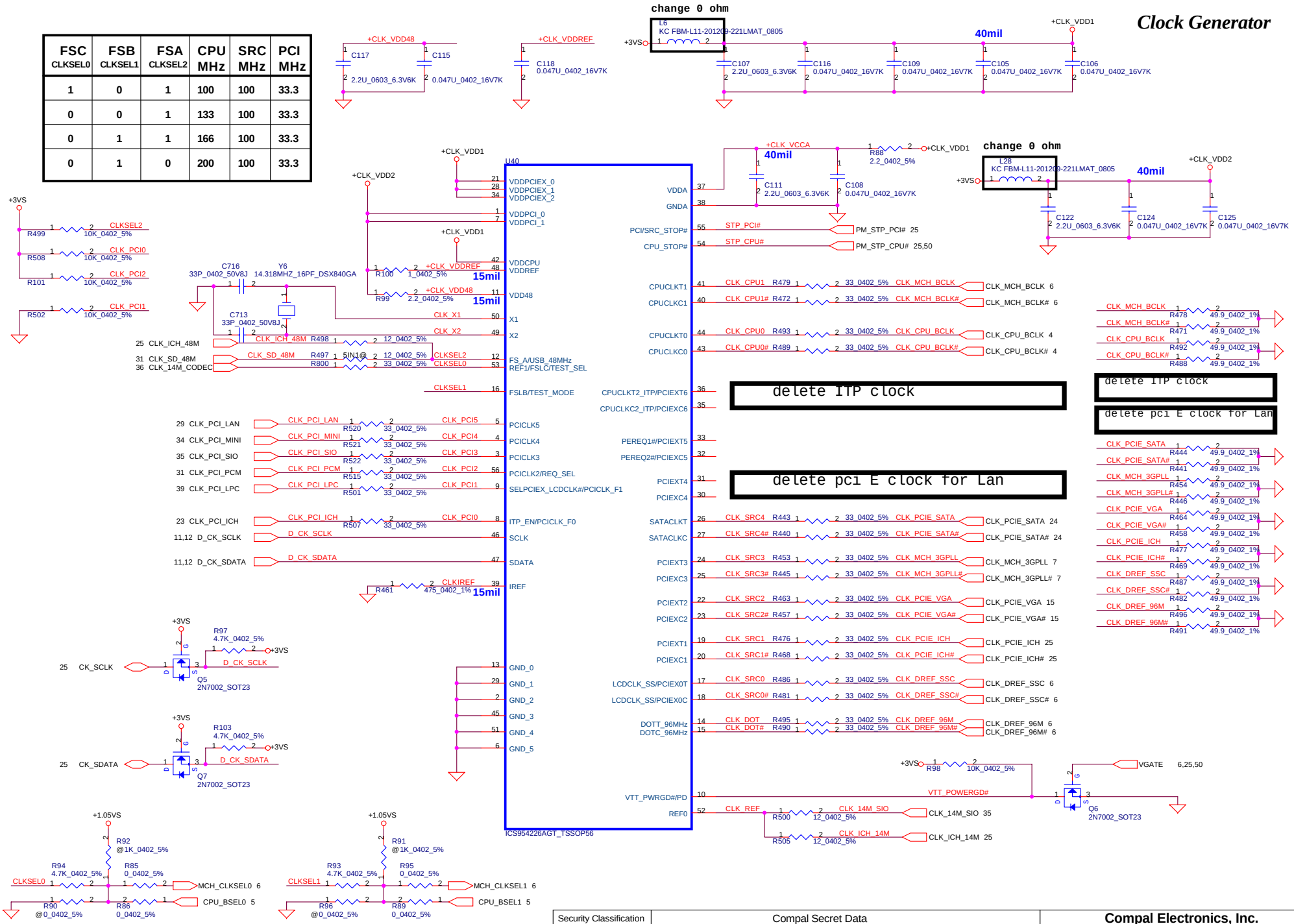


| Security Classification | Compal Secret Data | | |
|---|---|---|---|
| Issued Date | 2005/03/01 | Deciphered Date | 2006/03/01 |

THIS SHEET OF ENGINEERING DRAWING IS THE PROPRIETARY PROPERTY OF COMPAL ELECTRONICS, INC. AND CONTAINS CONFIDENTIAL AND TRADE SECRET INFORMATION. THIS SHEET MAY NOT BE TRANSFERED FROM THE CUSTODY OF THE COMPETENT DIVISION OF R&D DEPARTMENT EXCEPT AS AUTHORIZED BY COMPAL ELECTRONICS, INC. NEITHER THIS SHEET NOR THE INFORMATION IT CONTAINS MAY BE USED BY OR DISCLOSED TO ANY THIRD PARTY WITHOUT PRIOR WRITTEN CONSENT OF COMPAL ELECTRONICS, INC.

**Compal Electronics, Inc.**

Title: Clock Generator

Size | Document Number: EAL30 LA-2691 | Rev

Date: 星期四, 三月 03, 2005 | Sheet 14 of 52

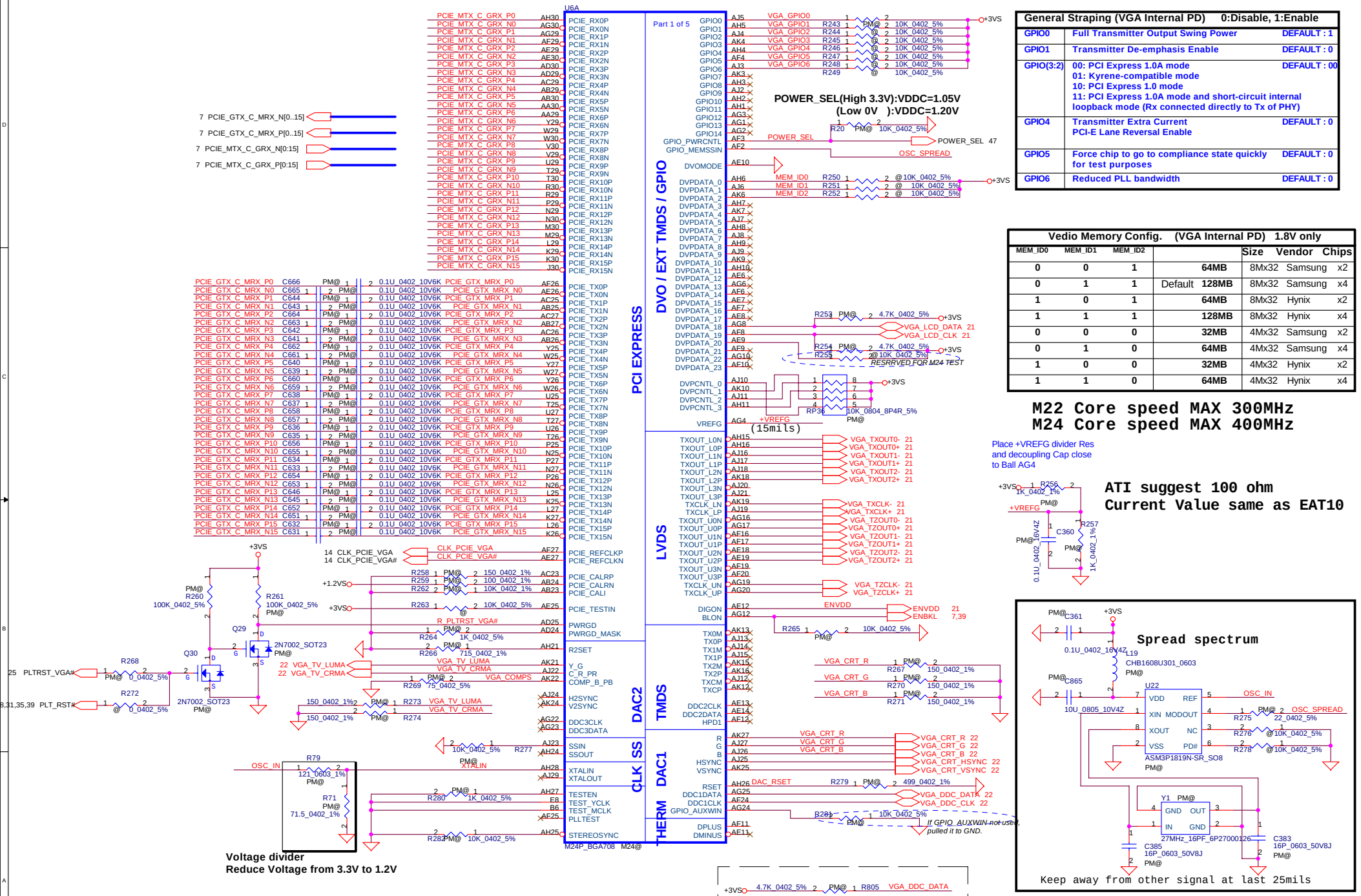


| General Straping (VGA Internal PD) | 0:Disable, 1:Enable | |
|---|---|---|
| GPIO0 | Full Transmitter Output Swing Power | DEFAULT : 1 |
| GPIO1 | Transmitter De-emphasis Enable | DEFAULT : 0 |
| GPIO(3:2) | 00: PCI Express 1.0A mode<br>01: Kyrene-compatible mode<br>10: PCI Express 1.0 mode<br>11: PCI Express 1.0A mode and short-circuit internal loopback mode (Rx connected directly to Tx of PHY) | DEFAULT : 00 |
| GPIO4 | Transmitter Extra Current<br>PCI-E Lane Reversal Enable | DEFAULT : 0 |
| GPIO5 | Force chip to go to compliance state quickly for test purposes | DEFAULT : 0 |
| GPIO6 | Reduced PLL bandwidth | DEFAULT : 0 |

| Vedio Memory Config. (VGA Internal PD) 1.8V only | | | | | | |
|---|---|---|---|---|---|---|
| MEM_ID0 | MEM_ID1 | MEM_ID2 | | Size | Vendor | Chips |
| 0 | 0 | 1 | 64MB | 8Mx32 | Samsung | x2 |
| 0 | 1 | 1 | Default 128MB | 8Mx32 | Samsung | x4 |
| 1 | 0 | 1 | 64MB | 8Mx32 | Hynix | x2 |
| 1 | 1 | 1 | 128MB | 8Mx32 | Hynix | x4 |
| 0 | 0 | 0 | 32MB | 4Mx32 | Samsung | x2 |
| 0 | 1 | 0 | 64MB | 4Mx32 | Samsung | x4 |
| 1 | 0 | 0 | 32MB | 4Mx32 | Hynix | x2 |
| 1 | 1 | 0 | 64MB | 4Mx32 | Hynix | x4 |

**M22 Core speed MAX 300MHz**
**M24 Core speed MAX 400MHz**

| Security Classification | Compal Secret Data | | |
|---|---|---|---|
| Issued Date | 2005/03/01 | Deciphered Date | 2006/03/01 |

THIS SHEET OF ENGINEERING DRAWING IS THE PROPRIETARY PROPERTY OF COMPAL ELECTRONICS, INC. AND CONTAINS CONFIDENTIAL AND TRADE SECRET INFORMATION. THIS SHEET MAY NOT BE TRANSFERED FROM THE CUSTODY OF THE COMPETENT DIVISION OF R&D DEPARTMENT EXCEPT AS AUTHORIZED BY COMPAL ELECTRONICS, INC. NEITHER THIS SHEET NOR THE INFORMATION IT CONTAINS MAY BE USED BY OR DISCLOSED TO ANY THIRD PARTY WITHOUT PRIOR WRITTEN CONSENT OF COMPAL ELECTRONICS, INC.

**Compal Electronics, Inc.**

Title: M22P/24P PCIE,LVDS,GPIO,CLK

Size: Custom | Document Number: EAL30 LA-2691 | Rev: 1.0

Date: 星期四, 三月 03, 2005 | Sheet 15 of 52

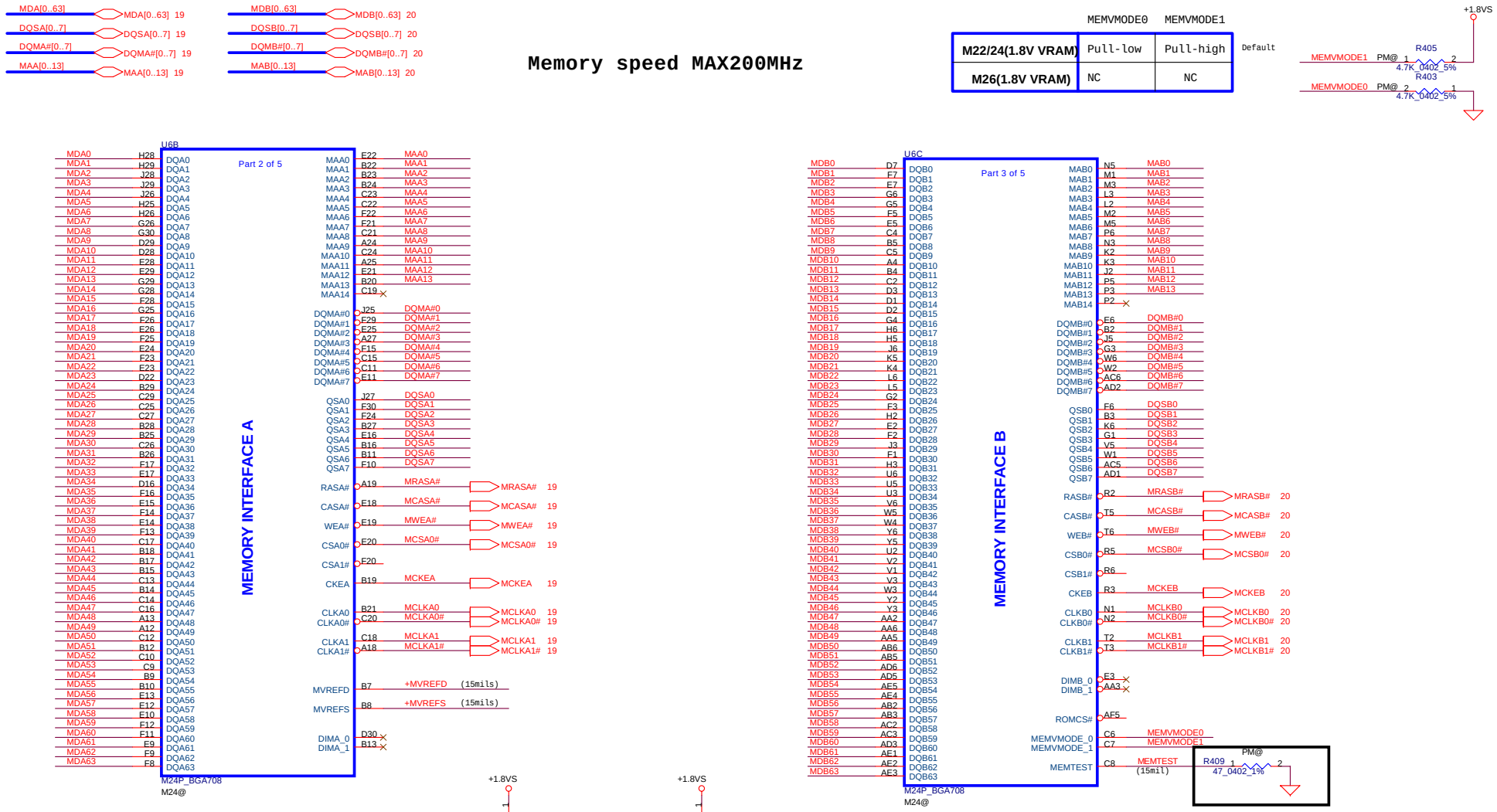


**change to 240 ohm when use M26**

| Security Classification | Compal Secret Data | | |
|---|---|---|---|
| Issued Date | 2005/03/01 | Deciphered Date | 2006/03/01 |

THIS SHEET OF ENGINEERING DRAWING IS THE PROPRIETARY PROPERTY OF COMPAL ELECTRONICS, INC. AND CONTAINS CONFIDENTIAL AND TRADE SECRET INFORMATION. THIS SHEET MAY NOT BE TRANSFERED FROM THE CUSTODY OF THE COMPETENT DIVISION OF R&D DEPARTMENT EXCEPT AS AUTHORIZED BY COMPAL ELECTRONICS, INC. NEITHER THIS SHEET NOR THE INFORMATION IT CONTAINS MAY BE USED BY OR DISCLOSED TO ANY THIRD PARTY WITHOUT PRIOR WRITTEN CONSENT OF COMPAL ELECTRONICS, INC.

**Compal Electronics, Inc.**

Title: M22P/24P Memory Interface

Size | Document Number: EAL30 LA-2691 | Rev 1.0

Date: 星期四, 三月 03, 2005 | Sheet 16 of 52

ATi suggestion:
Using filter is acceptable (Default)
Using liner regulator is optimal. (Reserve)

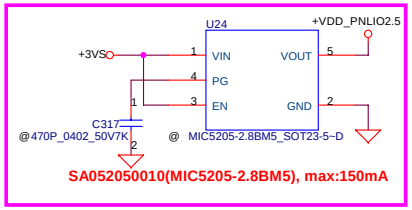


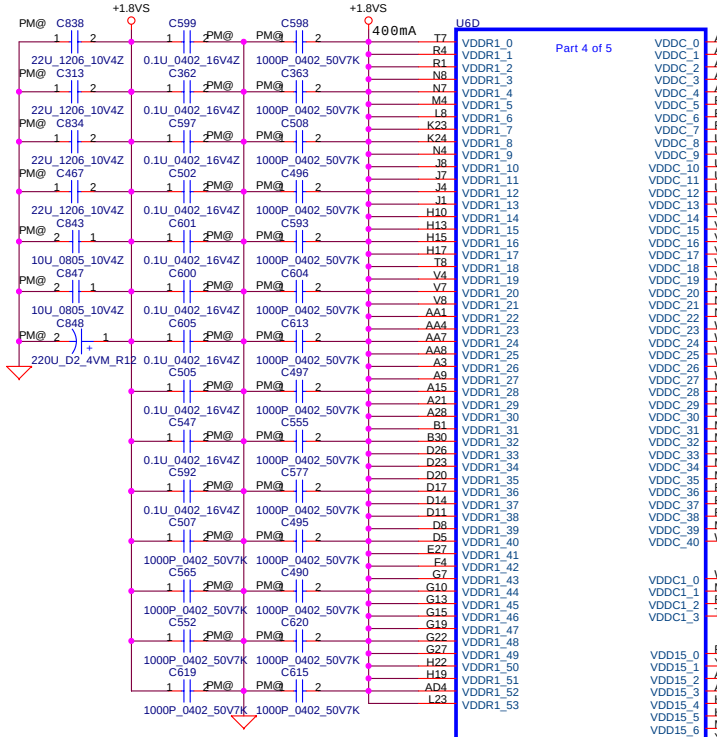


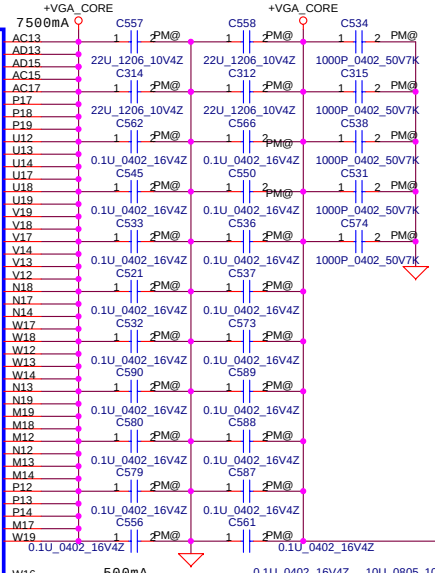


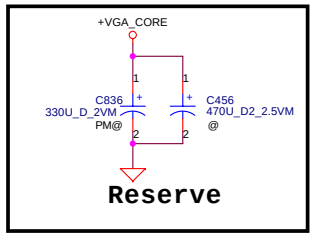


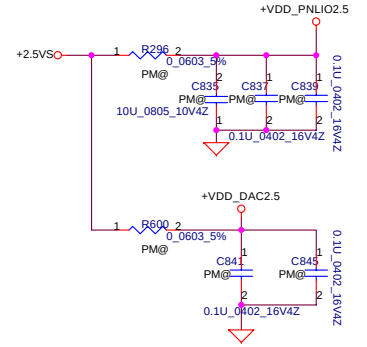


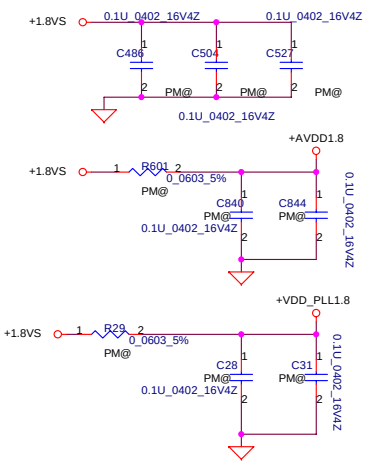


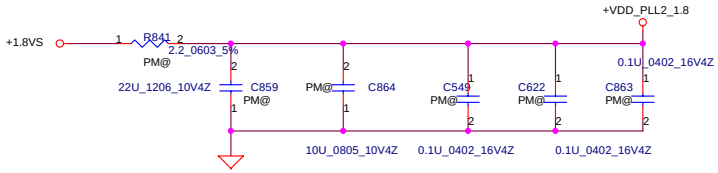


| Security Classification | Compal Secret Data | | |
|---|---|---|---|
| Issued Date | 2005/03/01 | Deciphered Date | 2006/03/01 |

THIS SHEET OF ENGINEERING DRAWING IS THE PROPRIETARY PROPERTY OF COMPAL ELECTRONICS, INC. AND CONTAINS CONFIDENTIAL AND TRADE SECRET INFORMATION. THIS SHEET MAY NOT BE TRANSFERED FROM THE CUSTODY OF THE COMPETENT DIVISION OF R&D DEPARTMENT EXCEPT AS AUTHORIZED BY COMPAL ELECTRONICS, INC. NEITHER THIS SHEET NOR THE INFORMATION IT CONTAINS MAY BE USED BY OR DISCLOSED TO ANY THIRD PARTY WITHOUT PRIOR WRITTEN CONSENT OF COMPAL ELECTRONICS, INC.

**Compal Electronics, Inc.**

Title: M22P/24PWR

Size: Custom | Document Number: EAL30 LA-2691 | Rev: 1.0

Date: 星期四, 三月 03, 2005 | Sheet 17 of 52

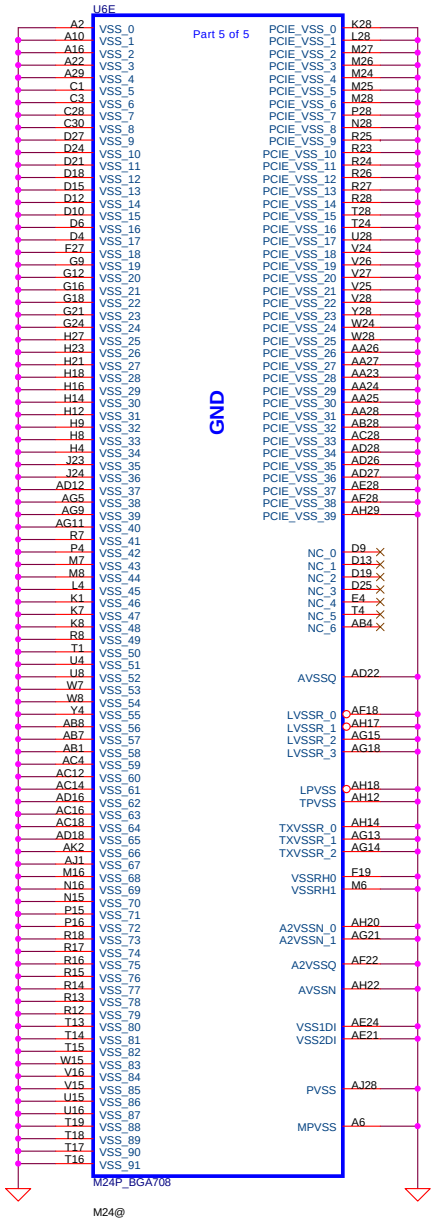


| Security Classification | Compal Secret Data | | |
|---|---|---|---|
| Issued Date | 2005/03/01 | Deciphered Date | 2006/03/01 |

THIS SHEET OF ENGINEERING DRAWING IS THE PROPRIETARY PROPERTY OF COMPAL ELECTRONICS, INC. AND CONTAINS CONFIDENTIAL AND TRADE SECRET INFORMATION. THIS SHEET MAY NOT BE TRANSFERED FROM THE CUSTODY OF THE COMPETENT DIVISION OF R&D DEPARTMENT EXCEPT AS AUTHORIZED BY COMPAL ELECTRONICS, INC. NEITHER THIS SHEET NOR THE INFORMATION IT CONTAINS MAY BE USED BY OR DISCLOSED TO ANY THIRD PARTY WITHOUT PRIOR WRITTEN CONSENT OF COMPAL ELECTRONICS, INC.

**Compal Electronics, Inc.**

Title: M22P/24P GND

Size: Custom | Document Number: EAL30 LA-2691 | Rev: 1.0

Date: 星期四, 三月 03, 2005 | Sheet 18 of 52

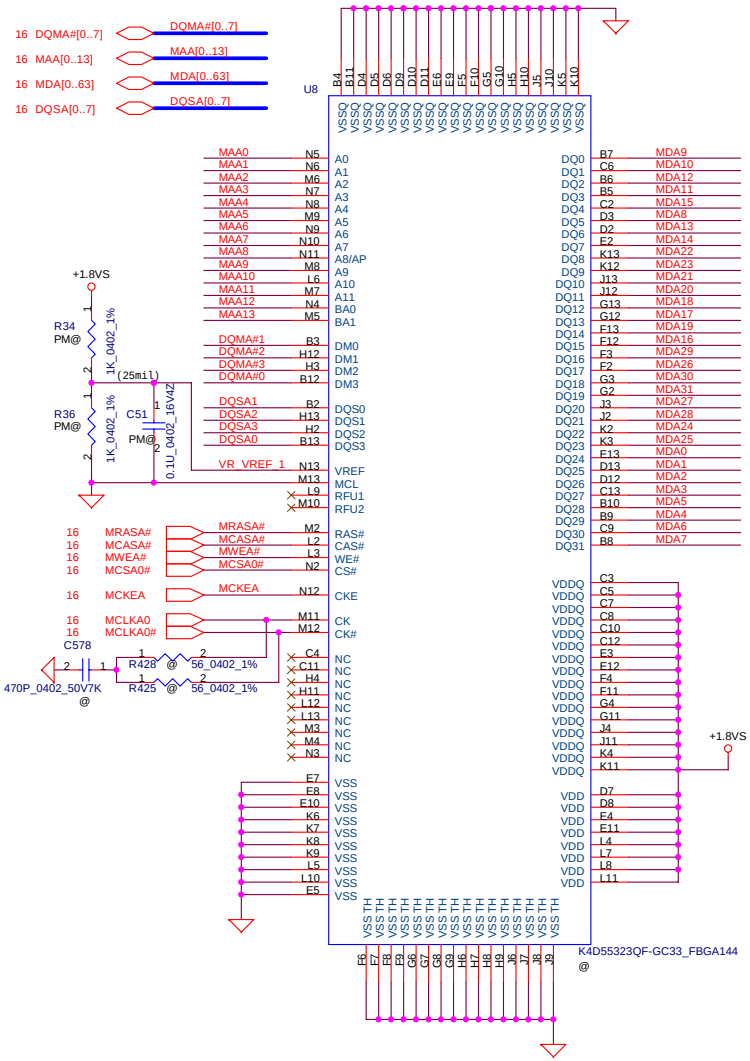


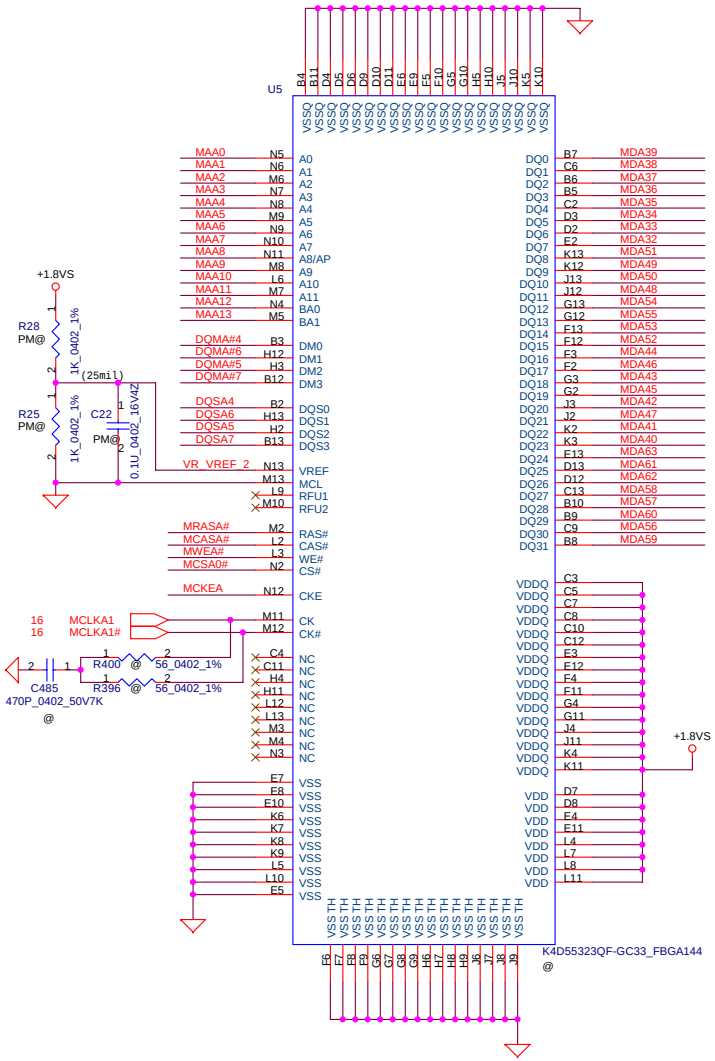


## As close as possible to relatied pin

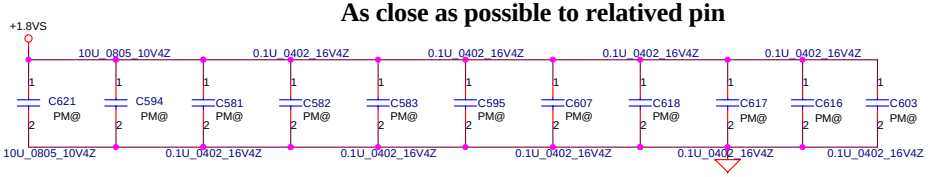


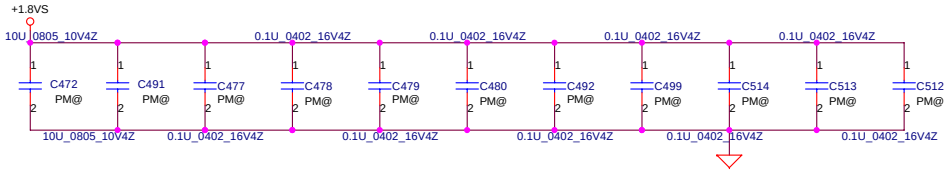


| Security Classification | Compal Secret Data | | |
|---|---|---|---|
| Issued Date | 2005/03/01 | Deciphered Date | 2006/03/01 |

THIS SHEET OF ENGINEERING DRAWING IS THE PROPRIETARY PROPERTY OF COMPAL ELECTRONICS, INC. AND CONTAINS CONFIDENTIAL AND TRADE SECRET INFORMATION. THIS SHEET MAY NOT BE TRANSFERED FROM THE CUSTODY OF THE COMPETENT DIVISION OF R&D DEPARTMENT EXCEPT AS AUTHORIZED BY COMPAL ELECTRONICS, INC. NEITHER THIS SHEET NOR THE INFORMATION IT CONTAINS MAY BE USED BY OR DISCLOSED TO ANY THIRD PARTY WITHOUT PRIOR WRITTEN CONSENT OF COMPAL ELECTRONICS, INC.

**Compal Electronics, Inc.**

Title: VGA DDR CHANNEL A

Size: Custom | Document Number: EAL30 LA-2691 | Rev: 1.0

Date: 星期四, 三月 03, 2005 | Sheet 19 of 52

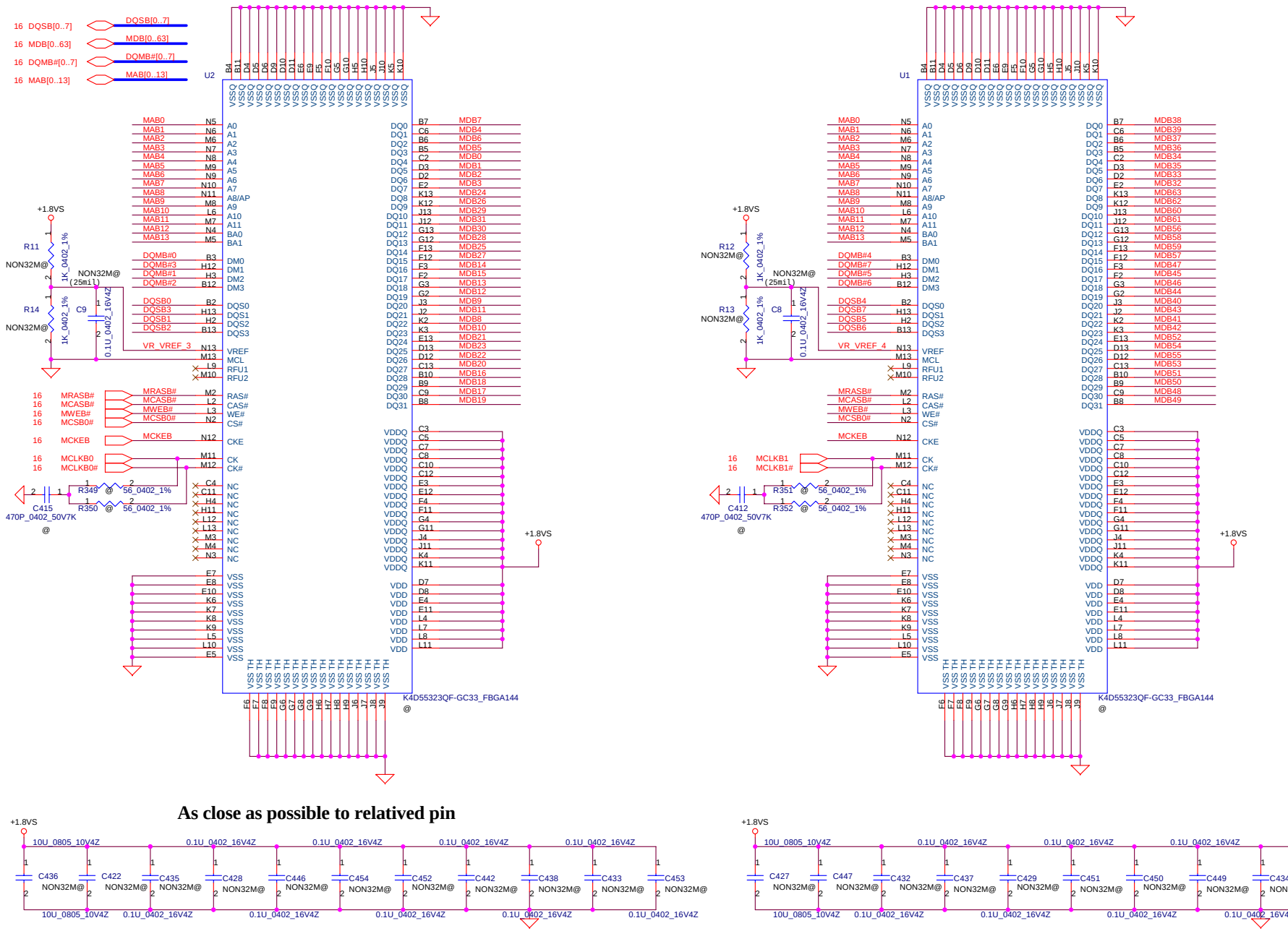


## As close as possible to relatied pin

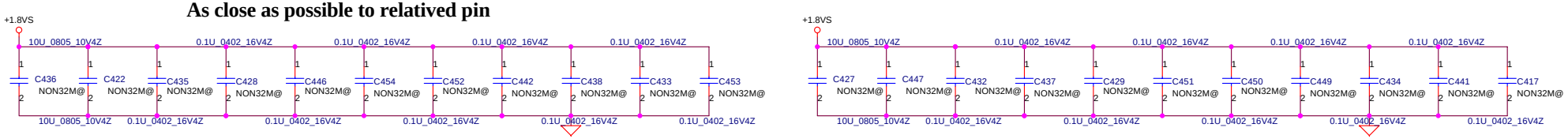


| Security Classification | Compal Secret Data | | |
|---|---|---|---|
| Issued Date | 2005/03/01 | Deciphered Date | 2006/03/01 |

THIS SHEET OF ENGINEERING DRAWING IS THE PROPRIETARY PROPERTY OF COMPAL ELECTRONICS, INC. AND CONTAINS CONFIDENTIAL AND TRADE SECRET INFORMATION. THIS SHEET MAY NOT BE TRANSFERED FROM THE CUSTODY OF THE COMPETENT DIVISION OF R&D DEPARTMENT EXCEPT AS AUTHORIZED BY COMPAL ELECTRONICS, INC. NEITHER THIS SHEET NOR THE INFORMATION IT CONTAINS MAY BE USED BY OR DISCLOSED TO ANY THIRD PARTY WITHOUT PRIOR WRITTEN CONSENT OF COMPAL ELECTRONICS, INC.

**Compal Electronics, Inc.**

Title: VGA DDR CHANNEL B

Size: Custom | Document Number: EAL30 LA-2691 | Rev: 1.0

Date: 星期四, 三月 03, 2005 | Sheet 20 of 52

# LCD POWER CIRCUIT

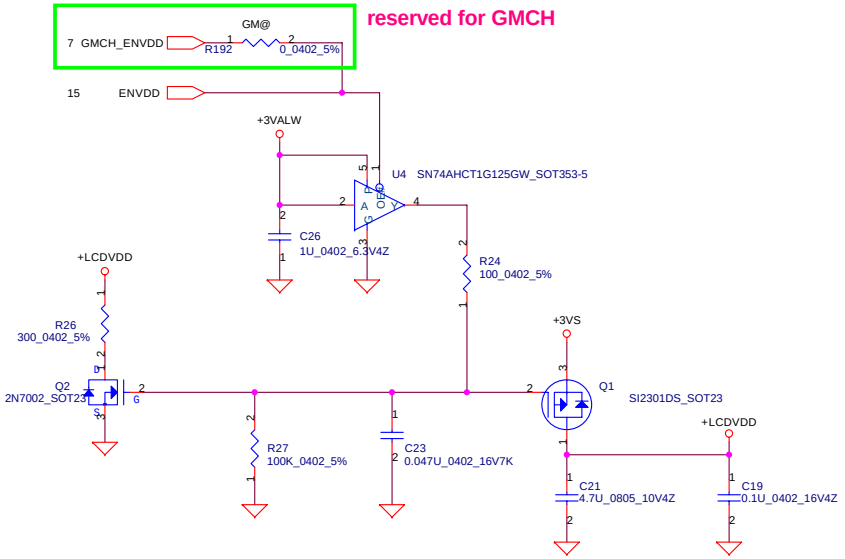


# LCD CONN.

Width: 40mils

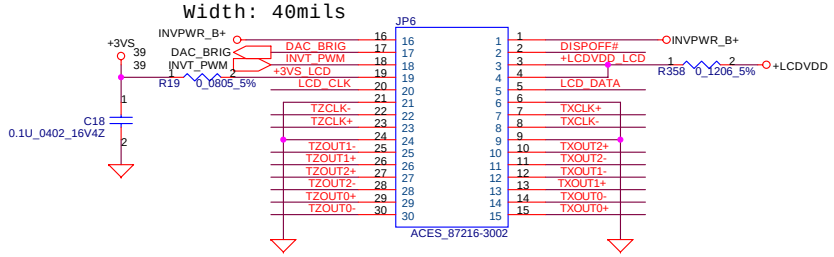


## For ATI M24

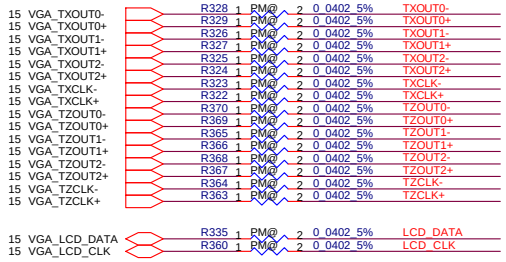


## From EC

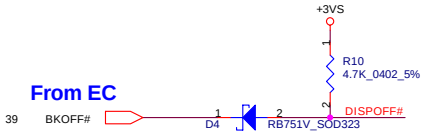


width = 60mil

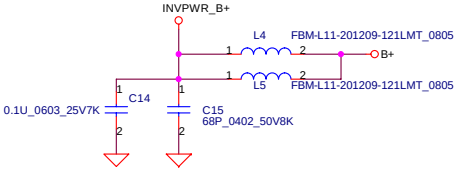


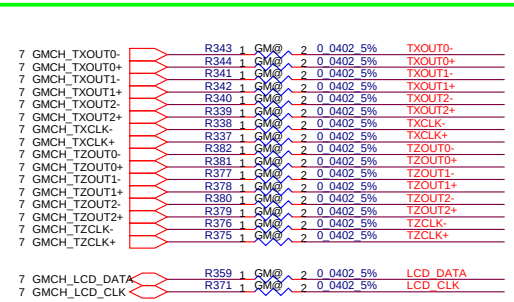


## For GMCH

| Security Classification | Compal Secret Data | | |
|---|---|---|---|
| Issued Date | 2005/03/01 | Deciphered Date | 2006/03/01 |

THIS SHEET OF ENGINEERING DRAWING IS THE PROPRIETARY PROPERTY OF COMPAL ELECTRONICS, INC. AND CONTAINS CONFIDENTIAL AND TRADE SECRET INFORMATION. THIS SHEET MAY NOT BE TRANSFERED FROM THE CUSTODY OF THE COMPETENT DIVISION OF R&D DEPARTMENT EXCEPT AS AUTHORIZED BY COMPAL ELECTRONICS, INC. NEITHER THIS SHEET NOR THE INFORMATION IT CONTAINS MAY BE USED BY OR DISCLOSED TO ANY THIRD PARTY WITHOUT PRIOR WRITTEN CONSENT OF COMPAL ELECTRONICS, INC.

**Compal Electronics, Inc.**

Title: LCD CONN

Size: Custom | Document Number: EAL30 LA-2691 | Rev: 1.0

Date: 星期四, 三月 03, 2005 | Sheet 21 of 52

# CRT Connector

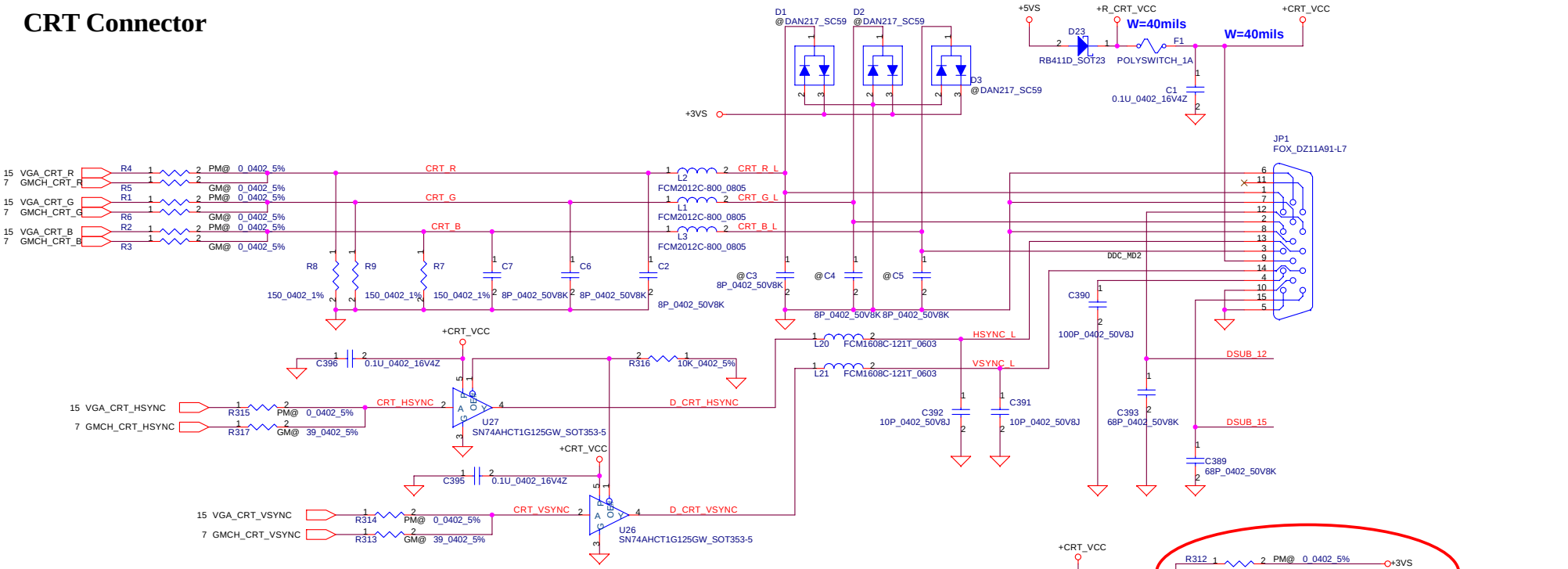


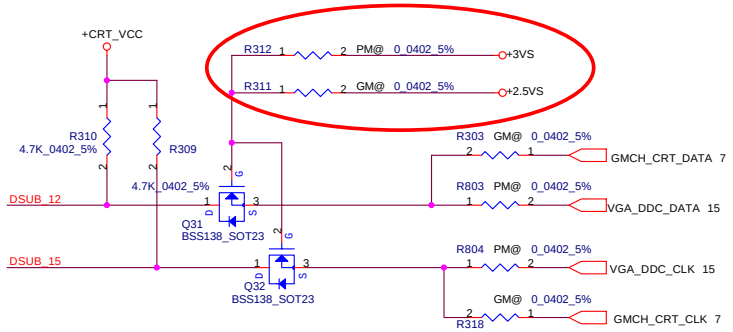


# TV-Out Connector

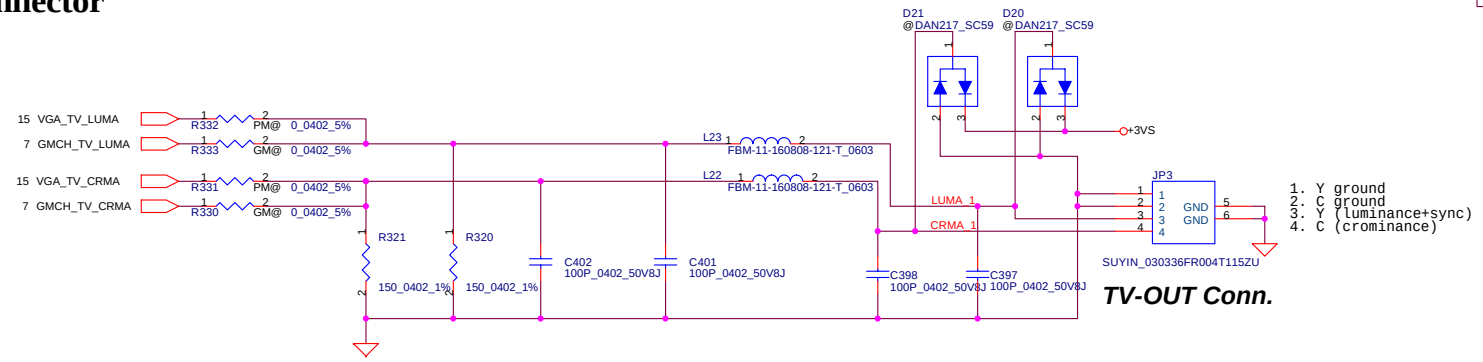


| Security Classification | Compal Secret Data | | |
|---|---|---|---|
| Issued Date | 2005/03/01 | Deciphered Date | 2006/03/01 |

THIS SHEET OF ENGINEERING DRAWING IS THE PROPRIETARY PROPERTY OF COMPAL ELECTRONICS, INC. AND CONTAINS CONFIDENTIAL AND TRADE SECRET INFORMATION. THIS SHEET MAY NOT BE TRANSFERED FROM THE CUSTODY OF THE COMPETENT DIVISION OF R&D DEPARTMENT EXCEPT AS AUTHORIZED BY COMPAL ELECTRONICS, INC. NEITHER THIS SHEET NOR THE INFORMATION IT CONTAINS MAY BE USED BY OR DISCLOSED TO ANY THIRD PARTY WITHOUT PRIOR WRITTEN CONSENT OF COMPAL ELECTRONICS, INC.

**Compal Electronics, Inc.**

Title: CRT & TV-OUT Connector

Size | Document Number: EAL30 LA-2691 | Rev 1.0

Date: 星期四, 三月 03, 2005 | Sheet 22 of 52

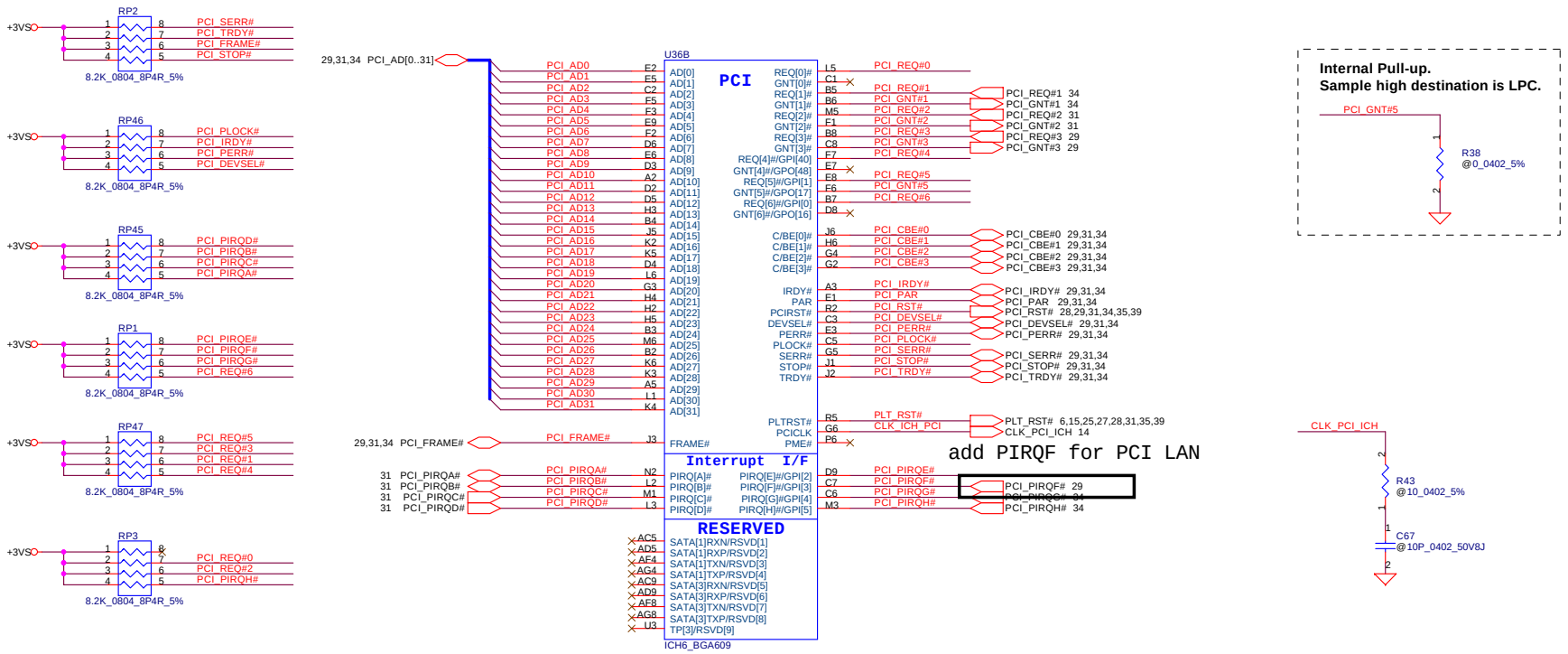


**ICH6-M**
**(R3:SA828010890)**
**(R1:SA8280108B0)**

| Security Classification | Compal Secret Data | | |
|---|---|---|---|
| Issued Date | 2005/03/01 | Deciphered Date | 2006/03/01 |

THIS SHEET OF ENGINEERING DRAWING IS THE PROPRIETARY PROPERTY OF COMPAL ELECTRONICS, INC. AND CONTAINS CONFIDENTIAL AND TRADE SECRET INFORMATION. THIS SHEET MAY NOT BE TRANSFERED FROM THE CUSTODY OF THE COMPETENT DIVISION OF R&D DEPARTMENT EXCEPT AS AUTHORIZED BY COMPAL ELECTRONICS, INC. NEITHER THIS SHEET NOR THE INFORMATION IT CONTAINS MAY BE USED BY OR DISCLOSED TO ANY THIRD PARTY WITHOUT PRIOR WRITTEN CONSENT OF COMPAL ELECTRONICS, INC.

**Compal Electronics, Inc.**

Title: ICH6(1/4)_HUB,PCI,HOST

Size | Document Number: EAL30 LA-2691 | Rev 1.0

Date: 星期四, 三月 03, 2005 | Sheet 23 of 52

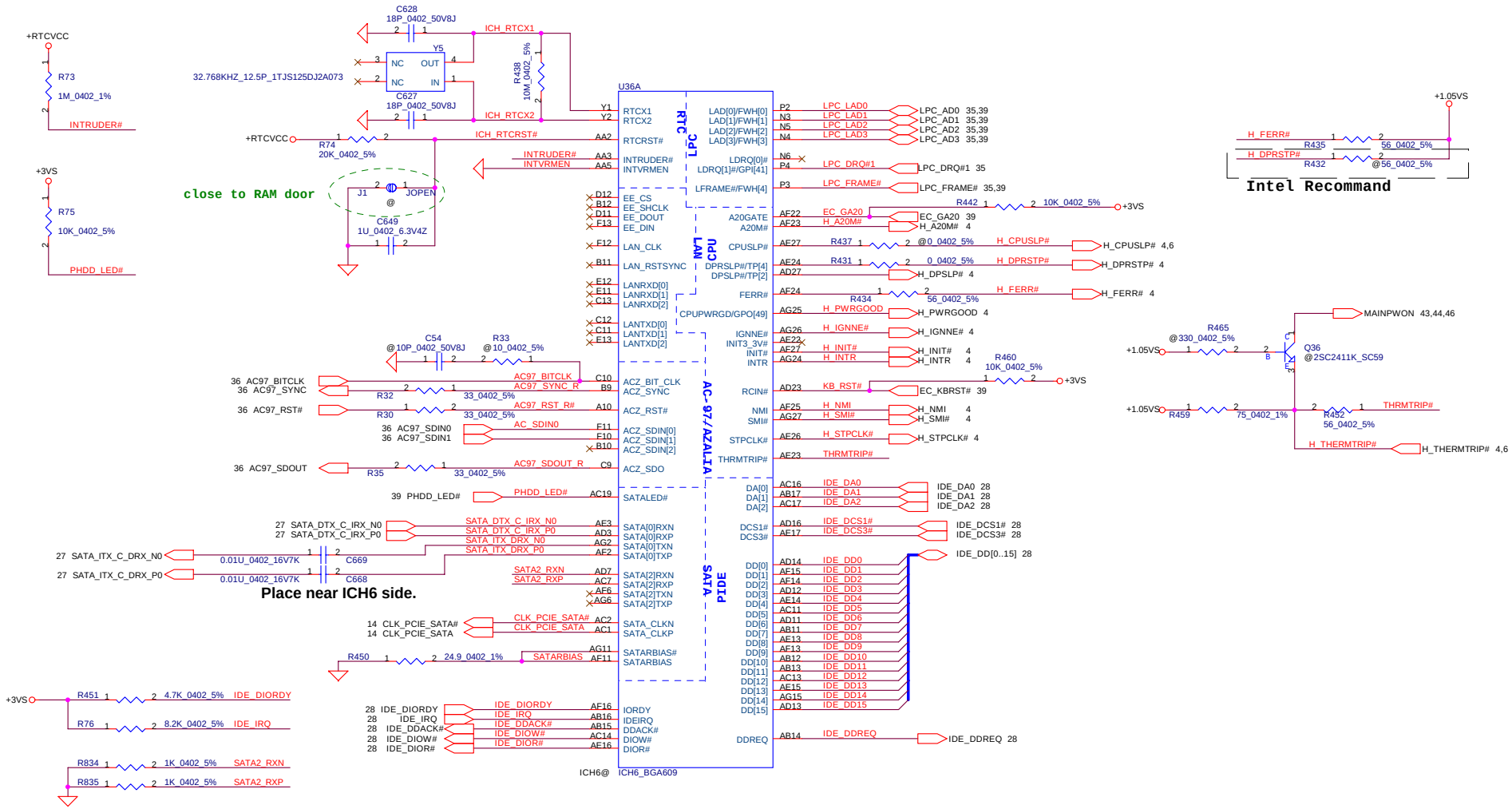


| Security Classification | Compal Secret Data | | |
|---|---|---|---|
| Issued Date | 2005/03/01 | Deciphered Date | 2006/03/01 |

THIS SHEET OF ENGINEERING DRAWING IS THE PROPRIETARY PROPERTY OF COMPAL ELECTRONICS, INC. AND CONTAINS CONFIDENTIAL AND TRADE SECRET INFORMATION. THIS SHEET MAY NOT BE TRANSFERED FROM THE CUSTODY OF THE COMPETENT DIVISION OF R&D DEPARTMENT EXCEPT AS AUTHORIZED BY COMPAL ELECTRONICS, INC. NEITHER THIS SHEET NOR THE INFORMATION IT CONTAINS MAY BE USED BY OR DISCLOSED TO ANY THIRD PARTY WITHOUT PRIOR WRITTEN CONSENT OF COMPAL ELECTRONICS, INC.

**Compal Electronics, Inc.**

Title: ICH6(2/4)_CPU,AC97,IDE,LPC

Size | Document Number: EAL30 LA-2691 | Rev 1.0

Date: 星期四, 三月 03, 2005 | Sheet 24 of 52

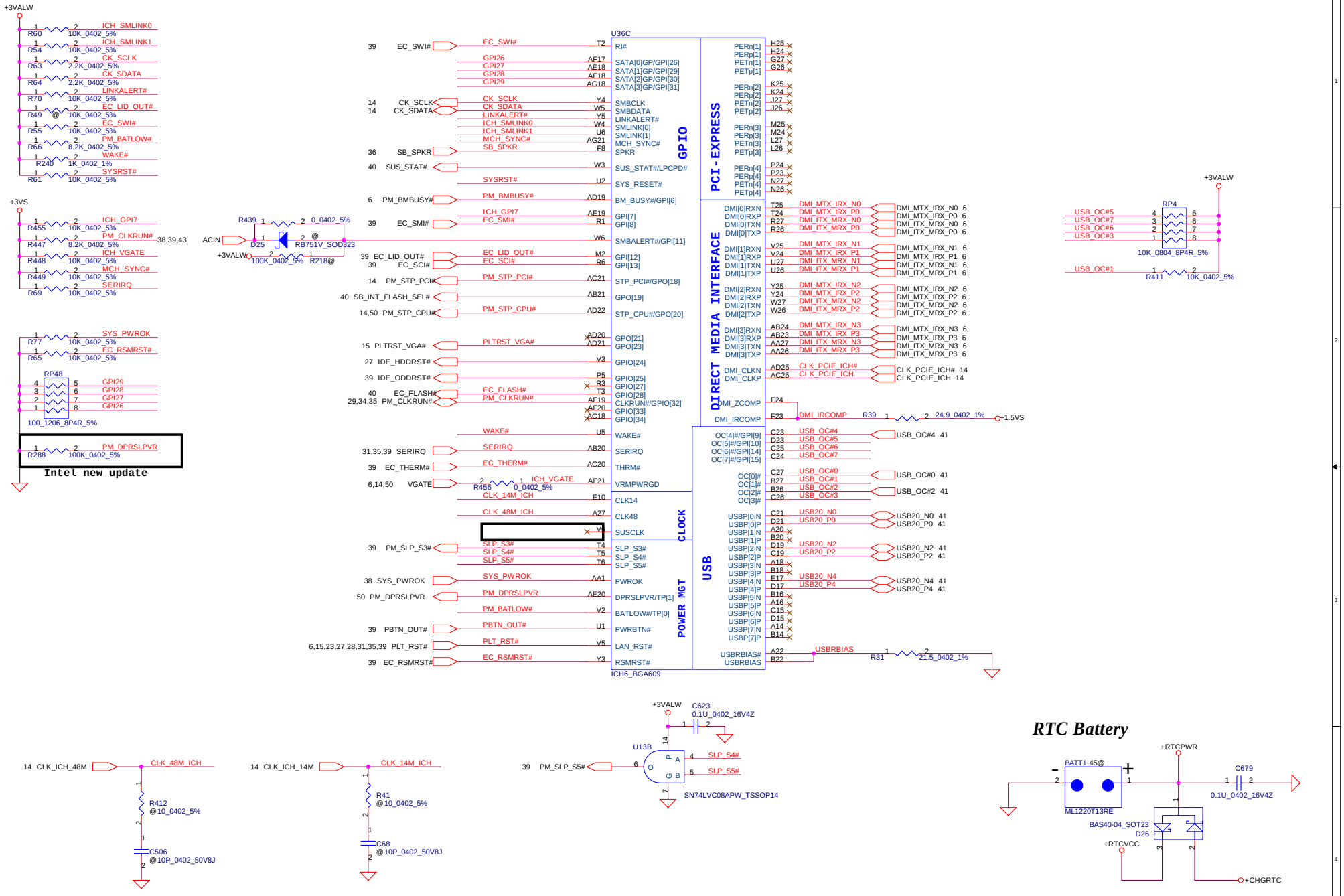


| Security Classification | Compal Secret Data | | |
|---|---|---|---|
| Issued Date | 2005/03/01 | Deciphered Date | 2006/03/01 |

THIS SHEET OF ENGINEERING DRAWING IS THE PROPRIETARY PROPERTY OF COMPAL ELECTRONICS, INC. AND CONTAINS CONFIDENTIAL AND TRADE SECRET INFORMATION. THIS SHEET MAY NOT BE TRANSFERED FROM THE CUSTODY OF THE COMPETENT DIVISION OF R&D DEPARTMENT EXCEPT AS AUTHORIZED BY COMPAL ELECTRONICS, INC. NEITHER THIS SHEET NOR THE INFORMATION IT CONTAINS MAY BE USED BY OR DISCLOSED TO ANY THIRD PARTY WITHOUT PRIOR WRITTEN CONSENT OF COMPAL ELECTRONICS, INC.

**Compal Electronics, Inc.**

Title: ICH6(3/4)_USB,PM,LAN,GPIO

Size | Document Number: EAL30 LA-2691 | Rev 1.0

Date: 星期四, 三月 03, 2005 | Sheet 25 of 52

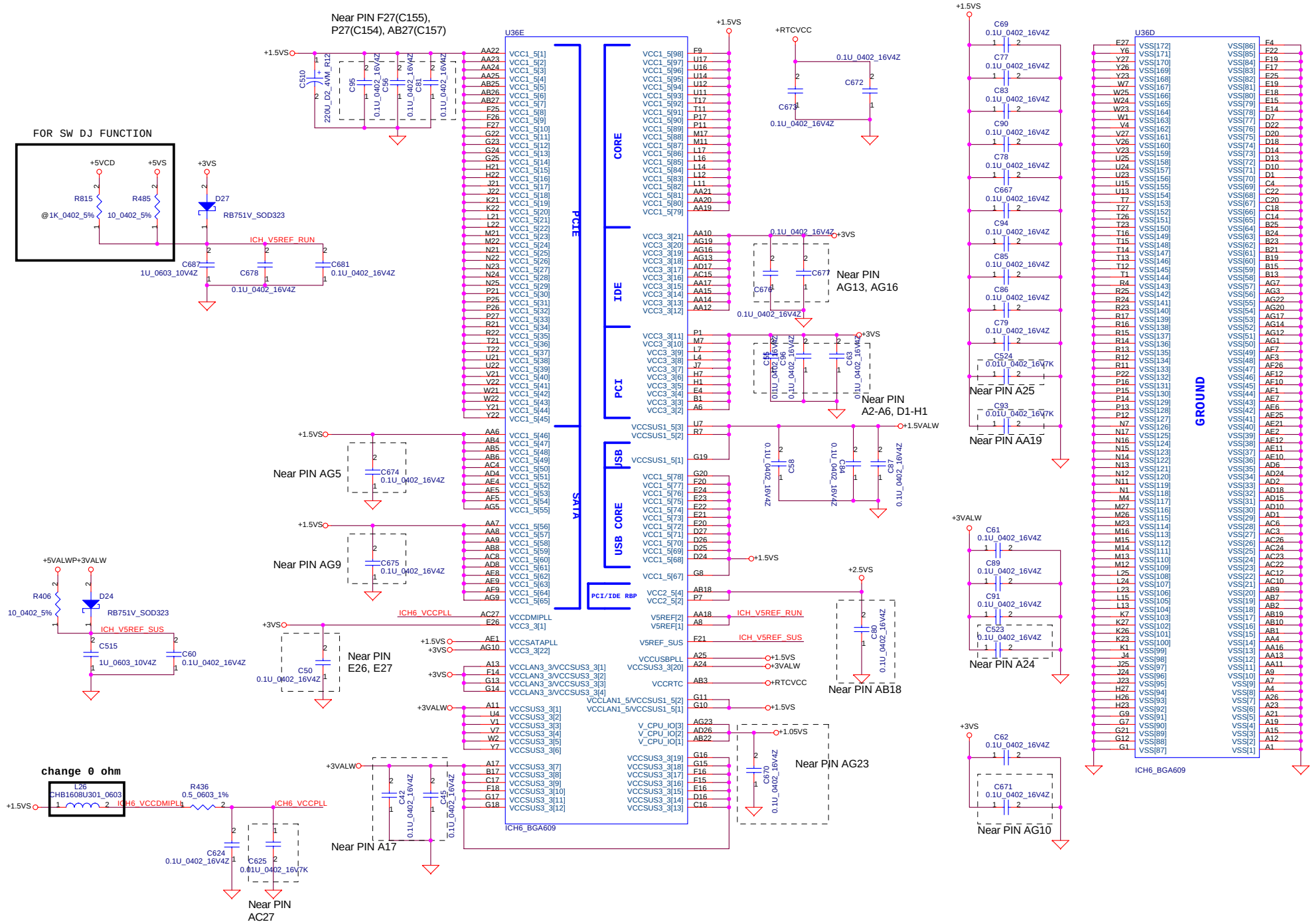


| Security Classification | Compal Secret Data | | |
|---|---|---|---|
| Issued Date | 2005/03/01 | Deciphered Date | 2006/03/01 |

THIS SHEET OF ENGINEERING DRAWING IS THE PROPRIETARY PROPERTY OF COMPAL ELECTRONICS, INC. AND CONTAINS CONFIDENTIAL AND TRADE SECRET INFORMATION. THIS SHEET MAY NOT BE TRANSFERED FROM THE CUSTODY OF THE COMPETENT DIVISION OF R&D DEPARTMENT EXCEPT AS AUTHORIZED BY COMPAL ELECTRONICS, INC. NEITHER THIS SHEET NOR THE INFORMATION IT CONTAINS MAY BE USED BY OR DISCLOSED TO ANY THIRD PARTY WITHOUT PRIOR WRITTEN CONSENT OF COMPAL ELECTRONICS, INC.

**Compal Electronics, Inc.**

Title: ICH6(4/4)_POWER&GND

Size: | Document Number: EAL30 LA-2691 | Rev: 1.0

Date: 星期四, 三月 03, 2005 | Sheet 26 of 52

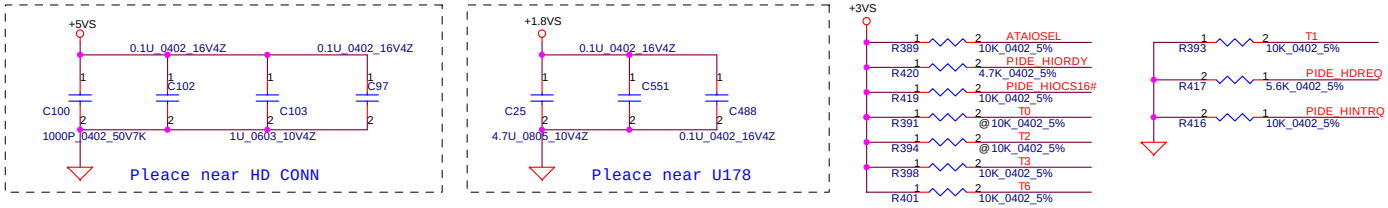


# SATA Module

Sets maximum transfer rate and UDMA mode

| CNFG2 INT PD | CNFG1 | CNFG0 INT PD | NOTE |
|---|---|---|---|
| * 0 | 0 | 0 | Device Mode 100MB/s |
| 0 | 0 | 1 | Device Mode 133MB/s |
| 0 | 1 | 0 | Device Mode 150MB/s |
| 1 | 0 | 0 | Host Mode 100MB/s |
| 1 | 0 | 1 | Host Mode 133MB/s |
| 1 | 1 | 0 | Host Mode 150MB/s |
| 0 | 1 | 1 | Reserved |
| 1 | 1 | 1 | Reserved |

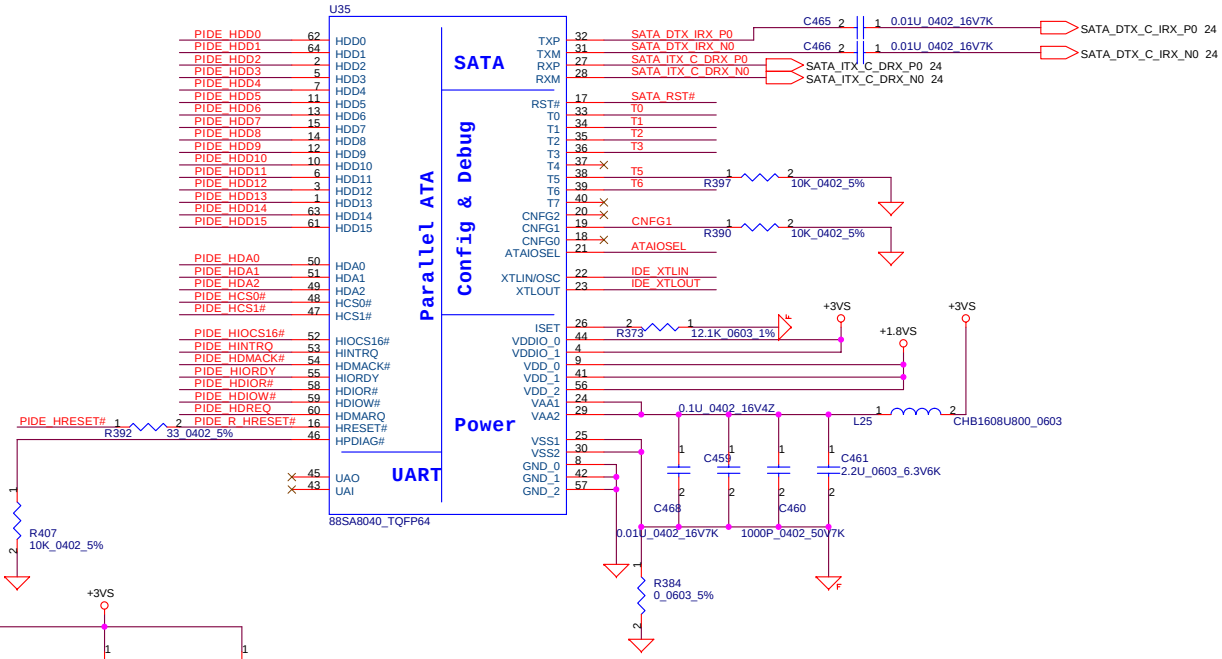


## P-ATA HDD Conn.

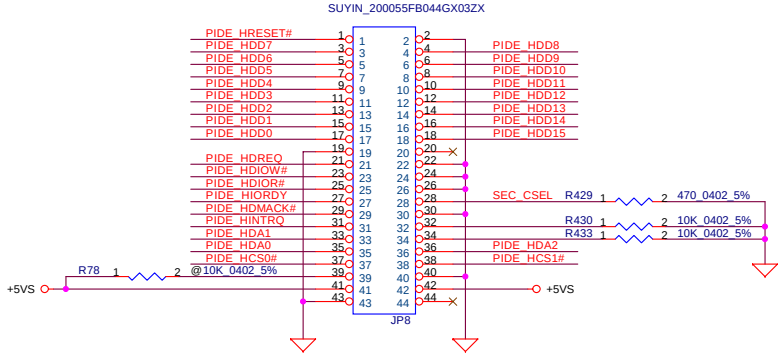


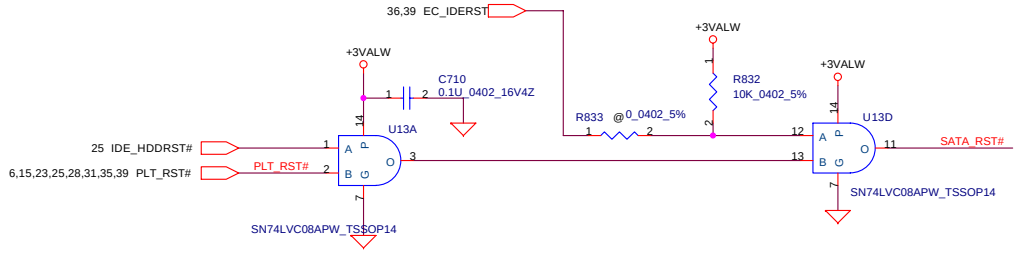


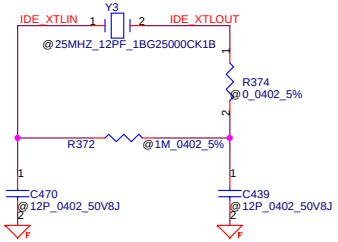


25MHz reference clock T[4:3] = 01

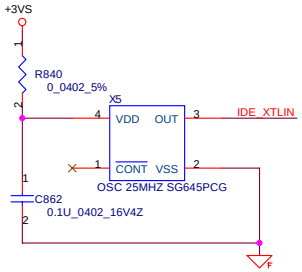


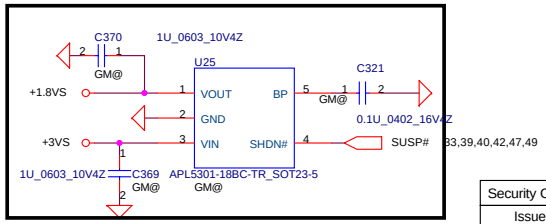


| Security Classification | Compal Secret Data | | |
|---|---|---|---|
| Issued Date | 2005/03/01 | Deciphered Date | 2006/03/01 |

THIS SHEET OF ENGINEERING DRAWING IS THE PROPRIETARY PROPERTY OF COMPAL ELECTRONICS, INC. AND CONTAINS CONFIDENTIAL AND TRADE SECRET INFORMATION. THIS SHEET MAY NOT BE TRANSFERED FROM THE CUSTODY OF THE COMPETENT DIVISION OF R&D DEPARTMENT EXCEPT AS AUTHORIZED BY COMPAL ELECTRONICS, INC. NEITHER THIS SHEET NOR THE INFORMATION IT CONTAINS MAY BE USED BY OR DISCLOSED TO ANY THIRD PARTY WITHOUT PRIOR WRITTEN CONSENT OF COMPAL ELECTRONICS, INC.

**Compal Electronics, Inc.**

Title: SATA/PATA-HDD, PATA ODD Connector

Size | Document Number: EAL30 LA-2691 | Rev 1.0

Date: 星期四, 三月 03, 2005 | Sheet 27 of 52

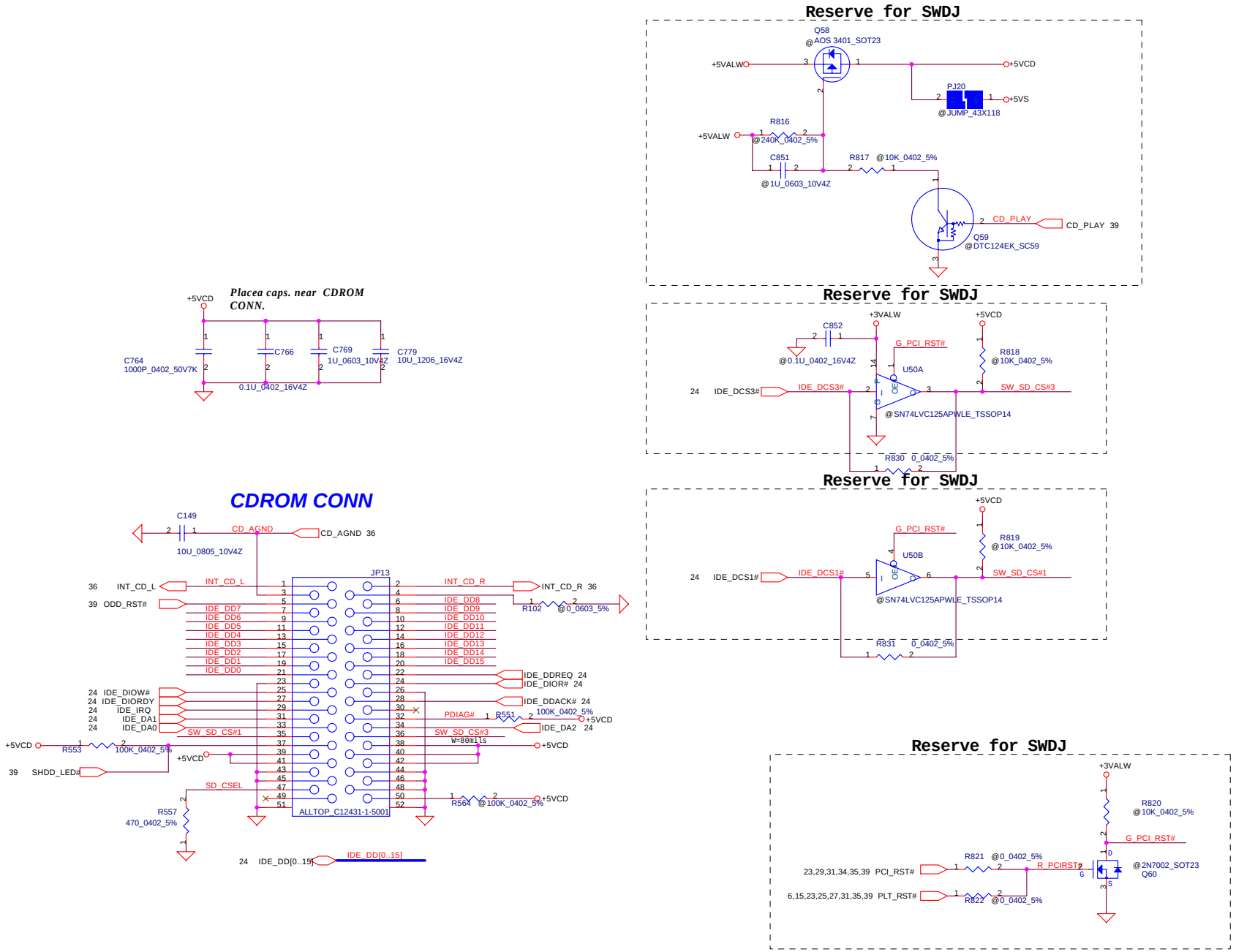


| Security Classification | Compal Secret Data | | |
|---|---|---|---|
| Issued Date | 2005/03/01 | Deciphered Date | 2006/03/01 |

THIS SHEET OF ENGINEERING DRAWING IS THE PROPRIETARY PROPERTY OF COMPAL ELECTRONICS, INC. AND CONTAINS CONFIDENTIAL AND TRADE SECRET INFORMATION. THIS SHEET MAY NOT BE TRANSFERED FROM THE CUSTODY OF THE COMPETENT DIVISION OF R&D DEPARTMENT EXCEPT AS AUTHORIZED BY COMPAL ELECTRONICS, INC. NEITHER THIS SHEET NOR THE INFORMATION IT CONTAINS MAY BE USED BY OR DISCLOSED TO ANY THIRD PARTY WITHOUT PRIOR WRITTEN CONSENT OF COMPAL ELECTRONICS, INC.

**Compal Electronics, Inc.**

Title: CDROM Connector & Direct CD

Size | Document Number: EAL30 LA-2691 | Rev 1.0

Date: 星期四, 三月 03, 2005 | Sheet 28 of 52

# LAN RTL8100C(L)

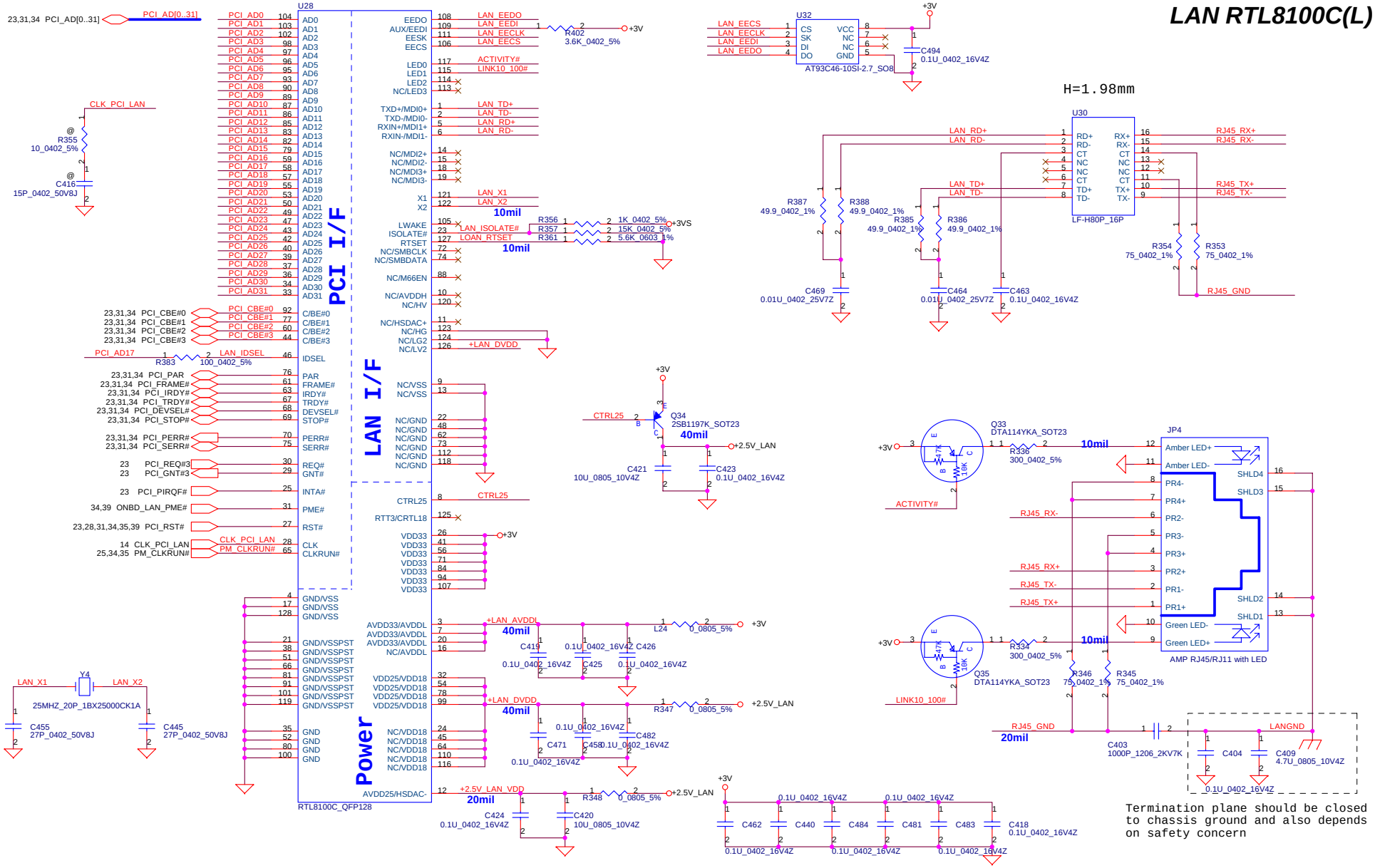


| Security Classification | Compal Secret Data | | |
|---|---|---|---|
| Issued Date | 2005/03/01 | Deciphered Date | 2006/03/01 |

THIS SHEET OF ENGINEERING DRAWING IS THE PROPRIETARY PROPERTY OF COMPAL ELECTRONICS, INC. AND CONTAINS CONFIDENTIAL AND TRADE SECRET INFORMATION. THIS SHEET MAY NOT BE TRANSFERED FROM THE CUSTODY OF THE COMPETENT DIVISION OF R&D DEPARTMENT EXCEPT AS AUTHORIZED BY COMPAL ELECTRONICS, INC. NEITHER THIS SHEET NOR THE INFORMATION IT CONTAINS MAY BE USED BY OR DISCLOSED TO ANY THIRD PARTY WITHOUT PRIOR WRITTEN CONSENT OF COMPAL ELECTRONICS, INC.

**Compal Electronics, Inc.**

Title: LAN RTL8100CL

Size: Custom | Document Number: EAL30 LA-2691 | Rev: 1.0

Date: 星期四, 三月 03, 2005 | Sheet 29 of 52

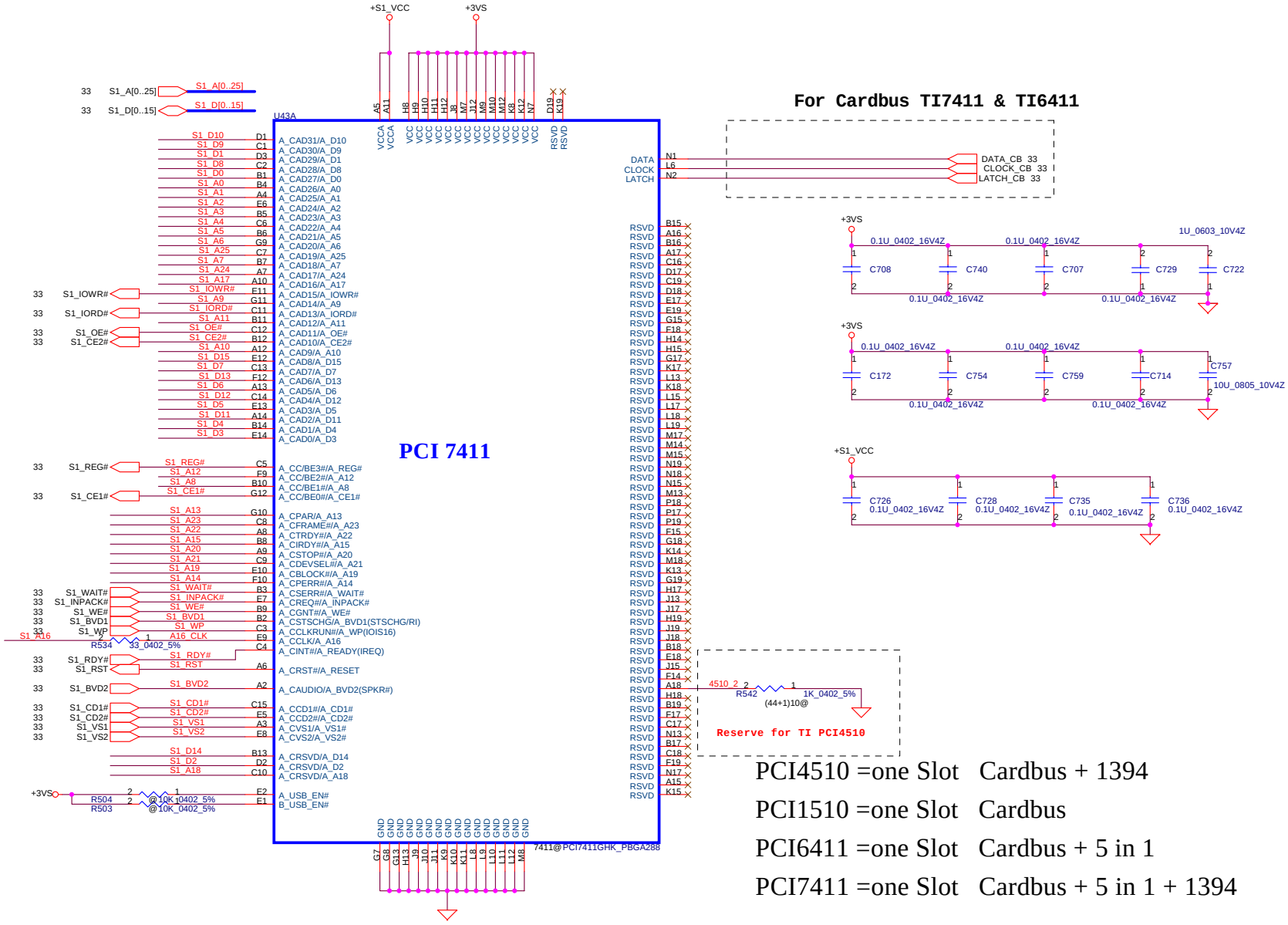


PCI4510 =one Slot Cardbus + 1394

PCI1510 =one Slot Cardbus

PCI6411 =one Slot Cardbus + 5 in 1

PCI7411 =one Slot Cardbus + 5 in 1 + 1394

| Security Classification | Compal Secret Data | | |
|---|---|---|---|
| Issued Date | 2005/03/01 | Deciphered Date | 2006/03/01 |

THIS SHEET OF ENGINEERING DRAWING IS THE PROPRIETARY PROPERTY OF COMPAL ELECTRONICS, INC. AND CONTAINS CONFIDENTIAL AND TRADE SECRET INFORMATION. THIS SHEET MAY NOT BE TRANSFERED FROM THE CUSTODY OF THE COMPETENT DIVISION OF R&D DEPARTMENT EXCEPT AS AUTHORIZED BY COMPAL ELECTRONICS, INC. NEITHER THIS SHEET NOR THE INFORMATION IT CONTAINS MAY BE USED BY OR DISCLOSED TO ANY THIRD PARTY WITHOUT PRIOR WRITTEN CONSENT OF COMPAL ELECTRONICS, INC.

**Compal Electronics, Inc.**

Title: **PCI7411-1**

Size: Custom | Document Number: **EAL30 LA-2691** | Rev: 1.0

Date: 星期四, 三月 03, 2005 | Sheet 30 of 52

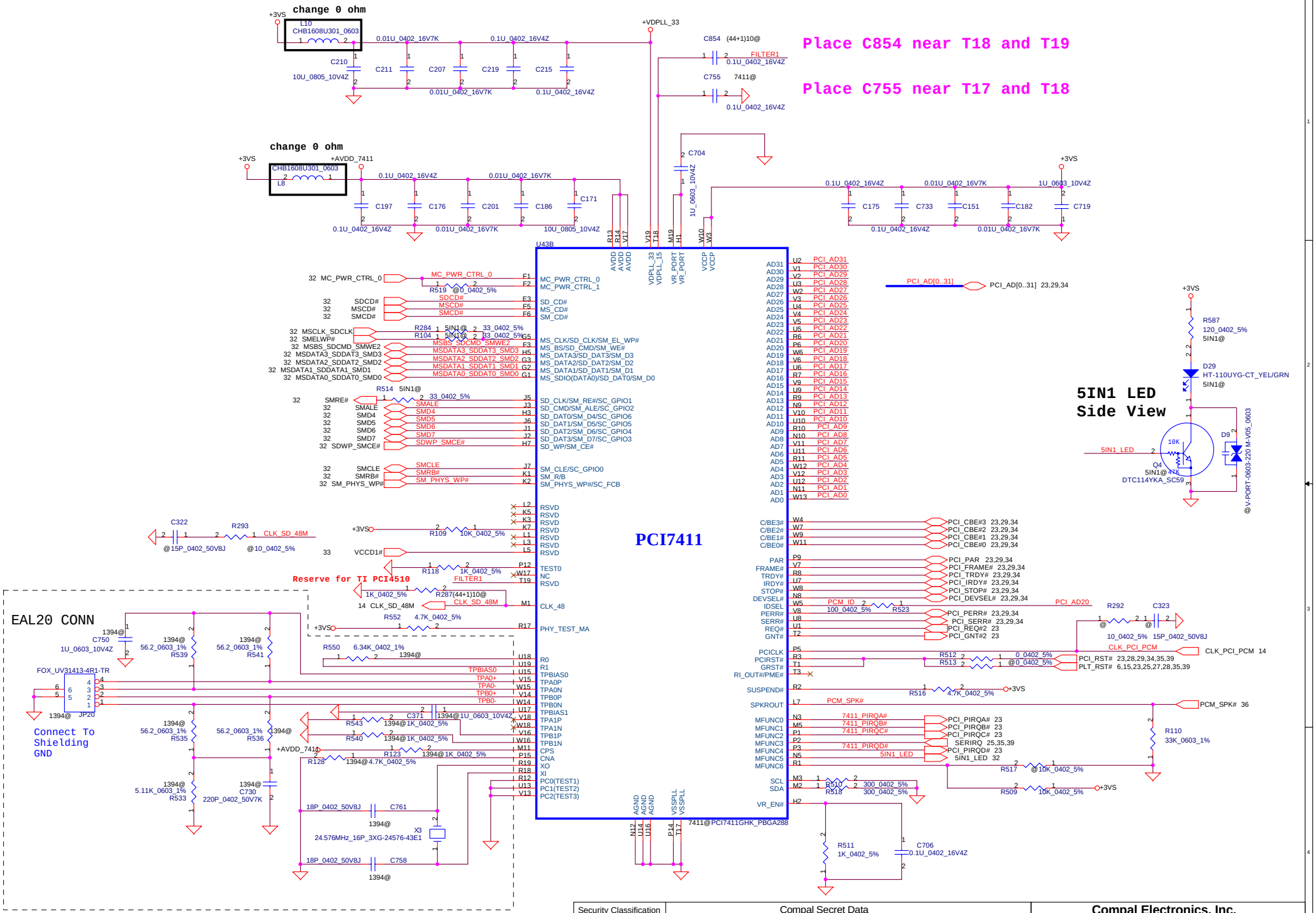


| Security Classification | Compal Secret Data | | |
|---|---|---|---|
| Issued Date | 2005/03/01 | Deciphered Date | 2006/03/01 |

THIS SHEET OF ENGINEERING DRAWING IS THE PROPRIETARY PROPERTY OF COMPAL ELECTRONICS, INC. AND CONTAINS CONFIDENTIAL AND TRADE SECRET INFORMATION. THIS SHEET MAY NOT BE TRANSFERED FROM THE CUSTODY OF THE COMPETENT DIVISION OF R&D DEPARTMENT EXCEPT AS AUTHORIZED BY COMPAL ELECTRONICS, INC. NEITHER THIS SHEET NOR THE INFORMATION IT CONTAINS MAY BE USED BY OR DISCLOSED TO ANY THIRD PARTY WITHOUT PRIOR WRITTEN CONSENT OF COMPAL ELECTRONICS, INC.

**Compal Electronics, Inc.**

Title: **PCI7411-2**

Size: Custom | Document Number: **EAL30 LA-2691** | Rev: 1.0

Date: 星期四, 三月 03, 2005 | Sheet 31 of 52

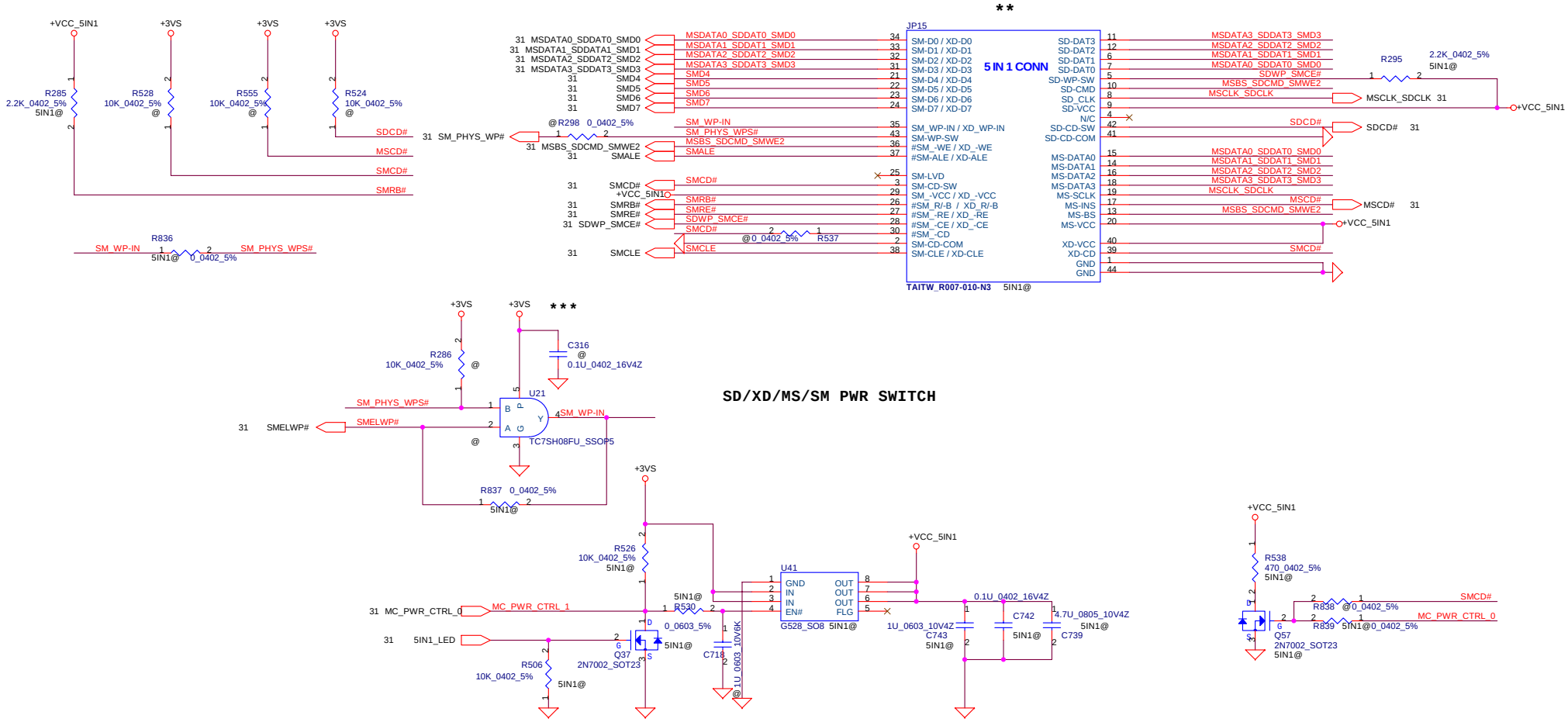


| Security Classification | Compal Secret Data | | |
|---|---|---|---|
| Issued Date | 2005/03/01 | Deciphered Date | 2006/03/01 |

THIS SHEET OF ENGINEERING DRAWING IS THE PROPRIETARY PROPERTY OF COMPAL ELECTRONICS, INC. AND CONTAINS CONFIDENTIAL AND TRADE SECRET INFORMATION. THIS SHEET MAY NOT BE TRANSFERED FROM THE CUSTODY OF THE COMPETENT DIVISION OF R&D DEPARTMENT EXCEPT AS AUTHORIZED BY COMPAL ELECTRONICS, INC. NEITHER THIS SHEET NOR THE INFORMATION IT CONTAINS MAY BE USED BY OR DISCLOSED TO ANY THIRD PARTY WITHOUT PRIOR WRITTEN CONSENT OF COMPAL ELECTRONICS, INC.

**Compal Electronics, Inc.**

Title: **5IN 1 CON**

Size: Custom | Document Number: EAL30 LA-2691 | Rev: 1.0

Date: 星期四, 三月 03, 2005 | Sheet 32 of 52

## Power Switch for PCMCIA

### Power Switch for PCMCIA (PCI7411 & PCI6411 only)

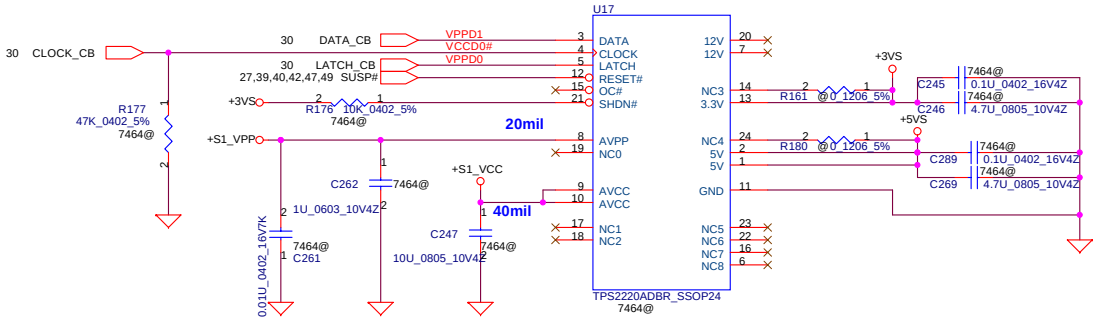


### CardBus Socket

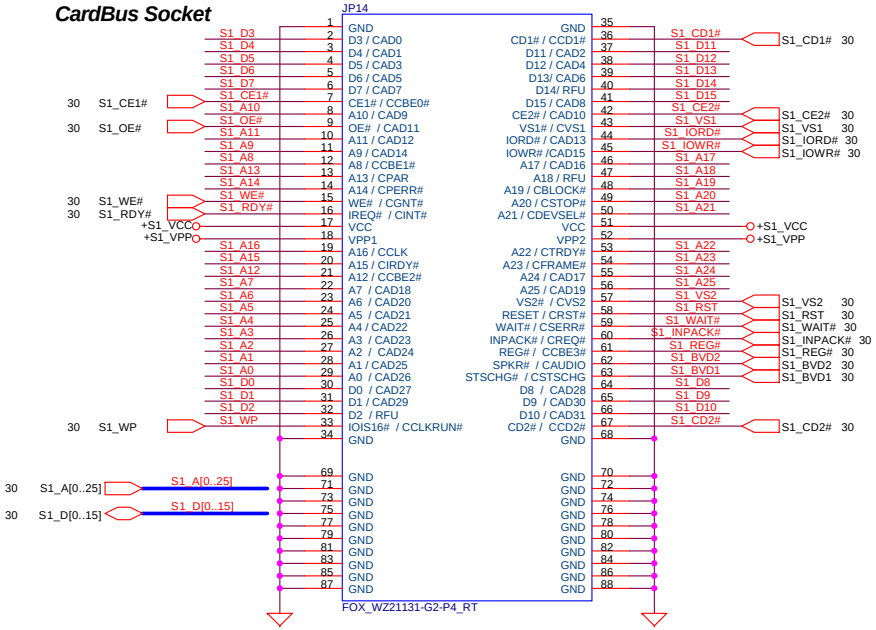


### Power Switch for PCMCIA (PCI1510 & PCI4510 only)

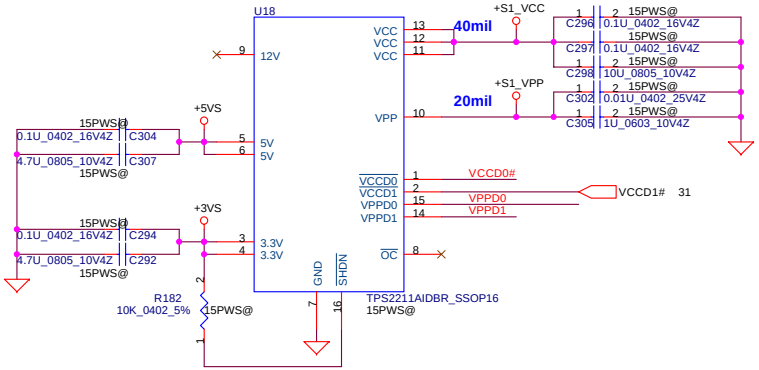


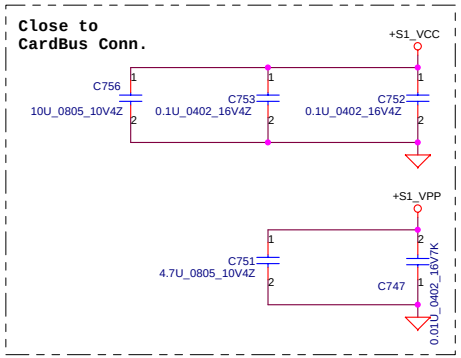


| Security Classification | Compal Secret Data | | |
|---|---|---|---|
| Issued Date | 2005/03/01 | Deciphered Date | 2006/03/01 |

THIS SHEET OF ENGINEERING DRAWING IS THE PROPRIETARY PROPERTY OF COMPAL ELECTRONICS, INC. AND CONTAINS CONFIDENTIAL AND TRADE SECRET INFORMATION. THIS SHEET MAY NOT BE TRANSFERED FROM THE CUSTODY OF THE COMPETENT DIVISION OF R&D DEPARTMENT EXCEPT AS AUTHORIZED BY COMPAL ELECTRONICS, INC. NEITHER THIS SHEET NOR THE INFORMATION IT CONTAINS MAY BE USED BY OR DISCLOSED TO ANY THIRD PARTY WITHOUT PRIOR WRITTEN CONSENT OF COMPAL ELECTRONICS, INC.

**Compal Electronics, Inc.**

Title: **PCMCIA Socket**

Size: Custom | Document Number: **EAL30 LA-2691** | Rev: 1.0

Date: 星期四, 三月 03, 2005 | Sheet 33 of 52

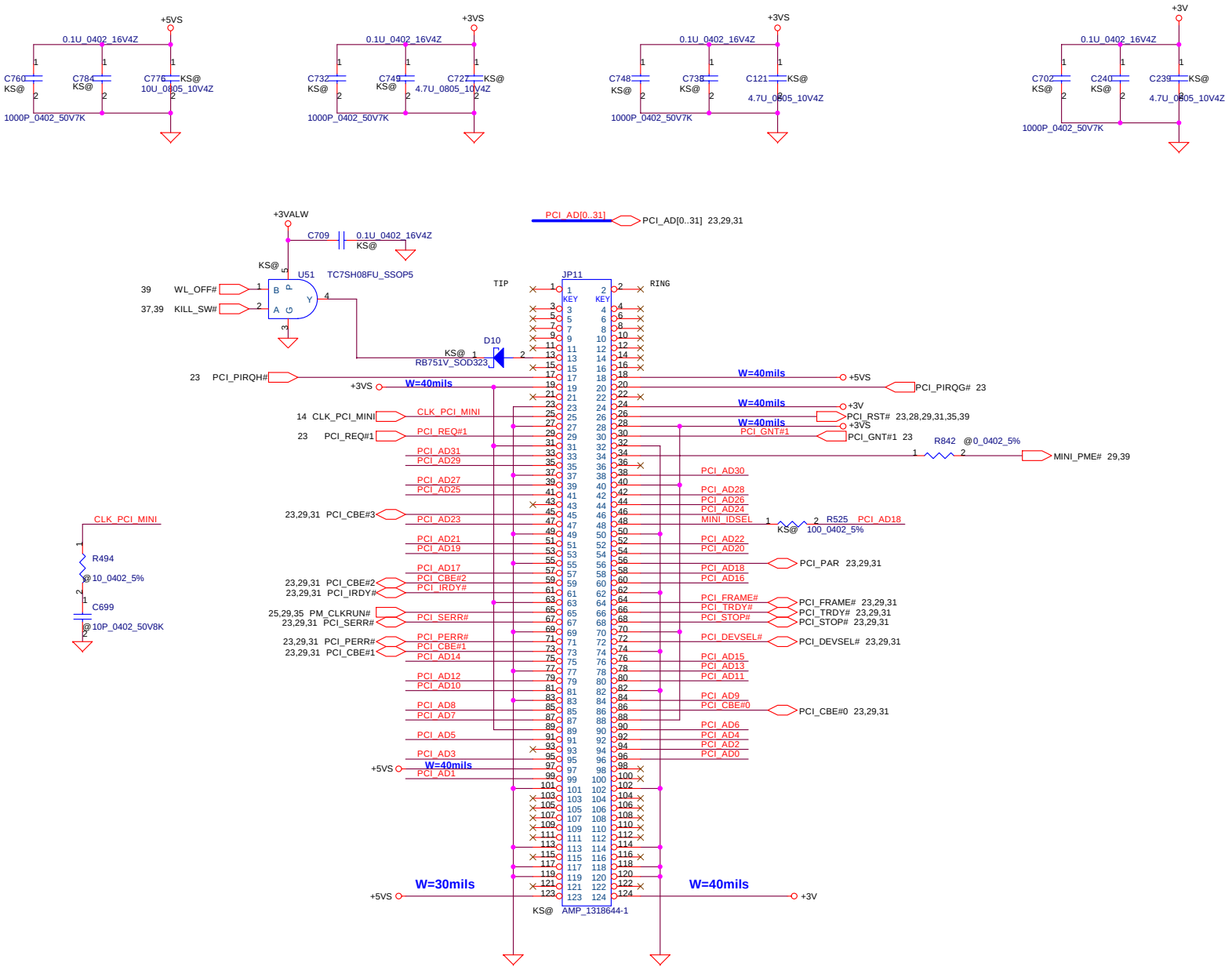


| Security Classification | Compal Secret Data | | |
|---|---|---|---|
| Issued Date | 2005/03/01 | Deciphered Date | 2006/03/01 |

THIS SHEET OF ENGINEERING DRAWING IS THE PROPRIETARY PROPERTY OF COMPAL ELECTRONICS, INC. AND CONTAINS CONFIDENTIAL AND TRADE SECRET INFORMATION. THIS SHEET MAY NOT BE TRANSFERED FROM THE CUSTODY OF THE COMPETENT DIVISION OF R&D DEPARTMENT EXCEPT AS AUTHORIZED BY COMPAL ELECTRONICS, INC. NEITHER THIS SHEET NOR THE INFORMATION IT CONTAINS MAY BE USED BY OR DISCLOSED TO ANY THIRD PARTY WITHOUT PRIOR WRITTEN CONSENT OF COMPAL ELECTRONICS, INC.

**Compal Electronics, Inc.**

Title: Mini PCI Slot

Size | Document Number: EAL30 LA-2691 | Rev 1.0

Date: 星期五, 三月 04, 2005 | Sheet 34 of 52

# SUPER I/O SMsC LPC47N217

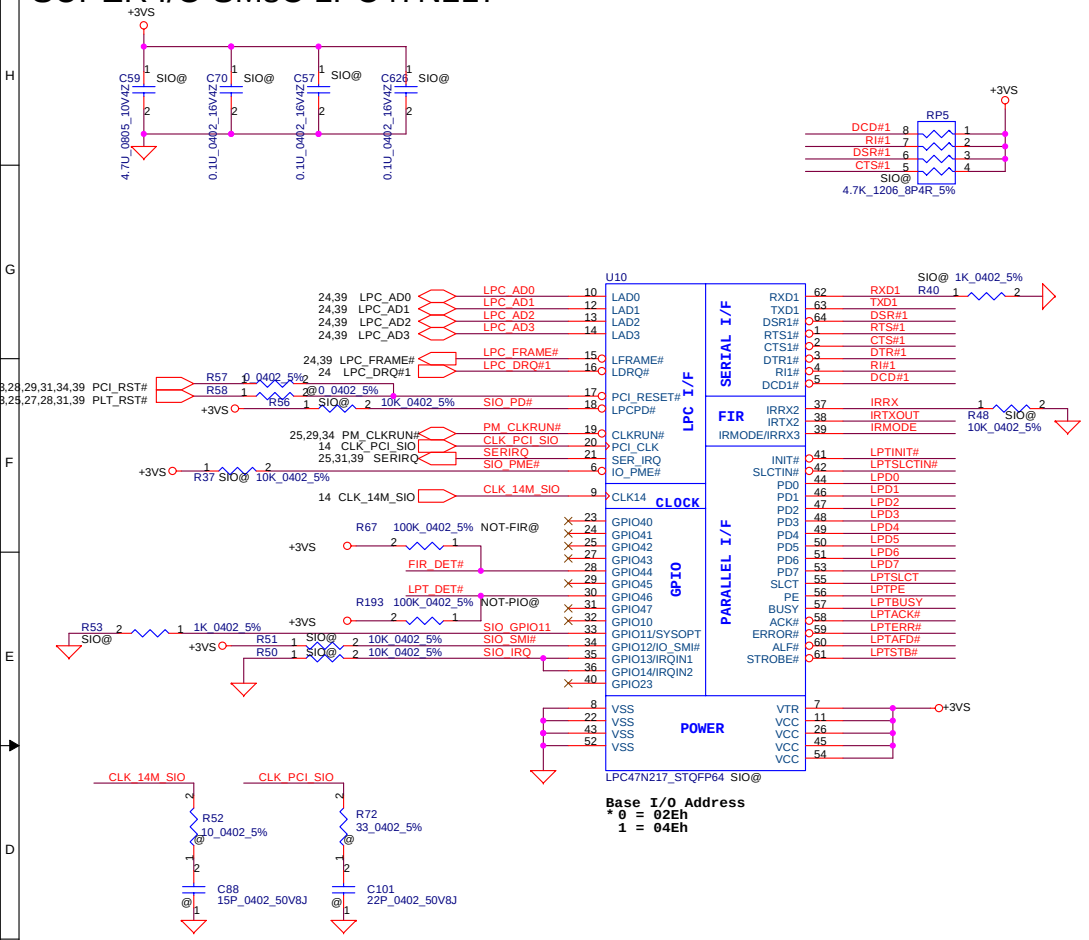


# FIR Module

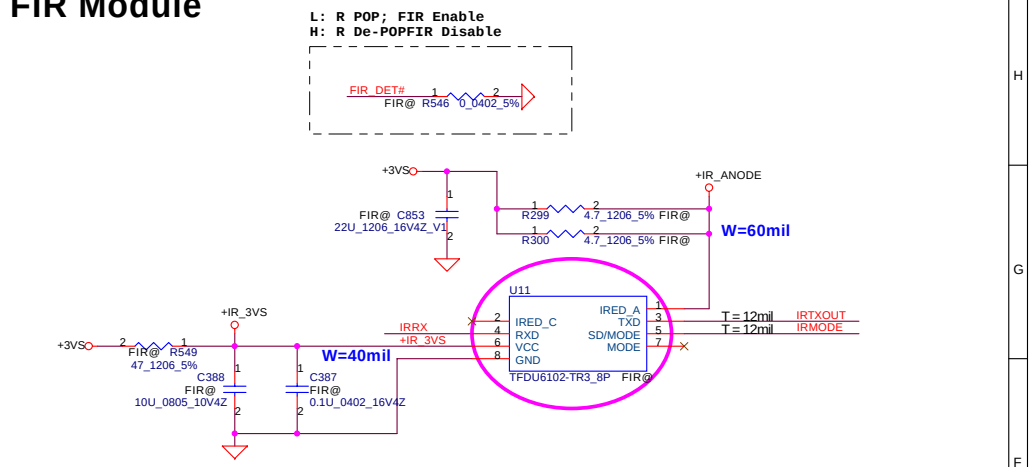


# Parallel Port

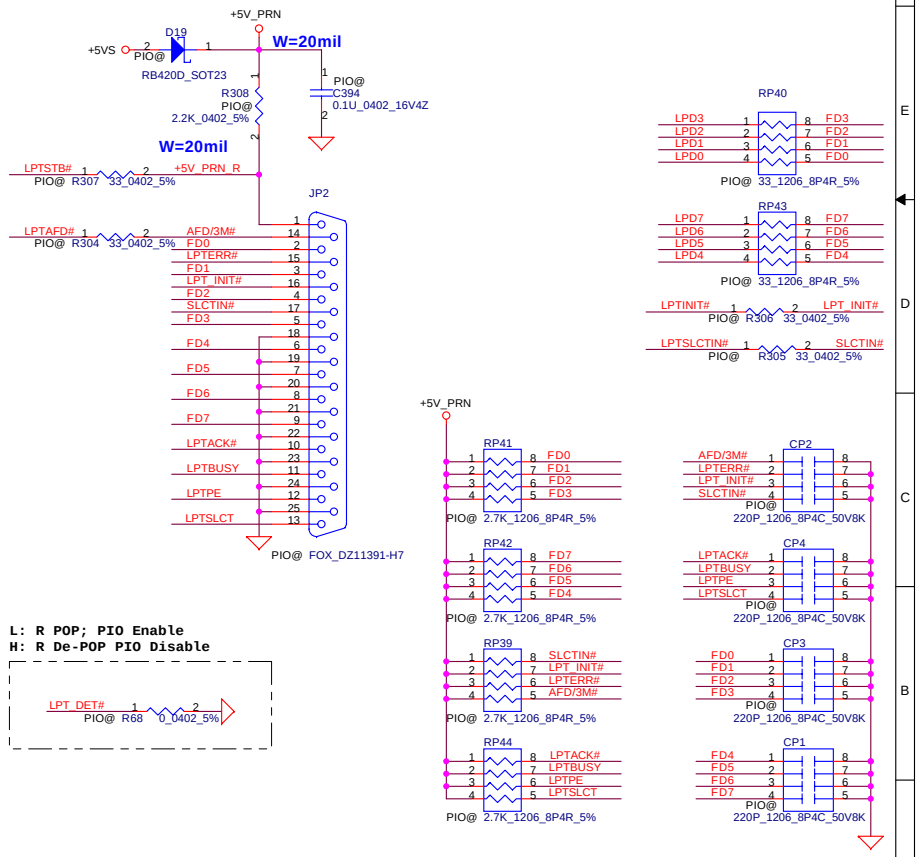


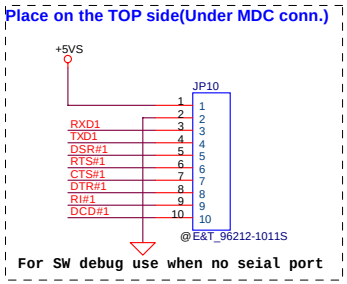


| Security Classification | Compal Secret Data | | |
|---|---|---|---|
| Issued Date | 2005/03/01 | Deciphered Date | 2006/03/01 |

THIS SHEET OF ENGINEERING DRAWING IS THE PROPRIETARY PROPERTY OF COMPAL ELECTRONICS, INC. AND CONTAINS CONFIDENTIAL AND TRADE SECRET INFORMATION. THIS SHEET MAY NOT BE TRANSFERED FROM THE CUSTODY OF THE COMPETENT DIVISION OF R&D DEPARTMENT EXCEPT AS AUTHORIZED BY COMPAL ELECTRONICS, INC. NEITHER THIS SHEET NOR THE INFORMATION IT CONTAINS MAY BE USED BY OR DISCLOSED TO ANY THIRD PARTY WITHOUT PRIOR WRITTEN CONSENT OF COMPAL ELECTRONICS, INC.

**Compal Electronics, Inc.**

Title: SMsC LAP47N217 SIO,PIO,FIR

Size: Custom | Document Number: EAL30 LA-2691 | Rev: 1.0

Date: 星期五, 三月 04, 2005 | Sheet 35 of 52

# AC97 Codec

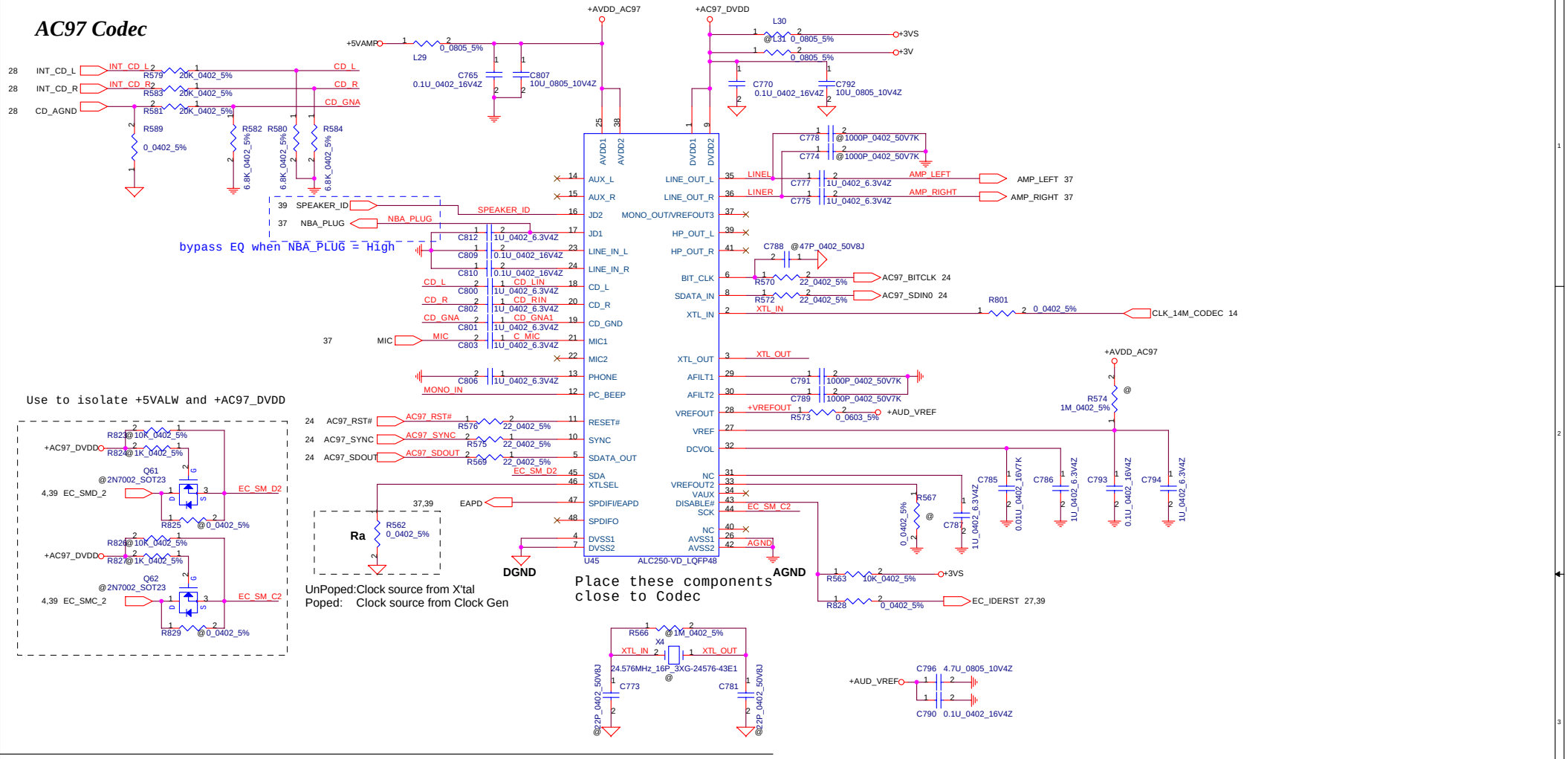


Use to isolate +5VALW and +AC97_DVDD




UnPoped:Clock source from X'tal
Poped: Clock source from Clock Gen

# System Sound

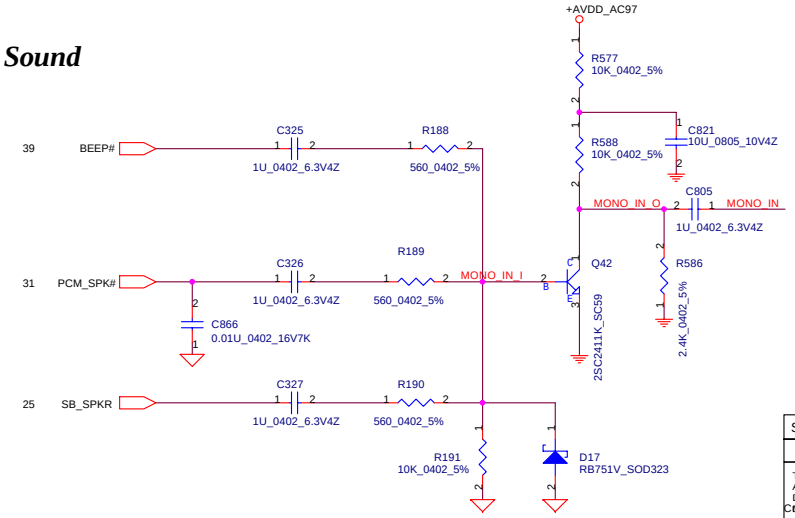


# MDC Connector

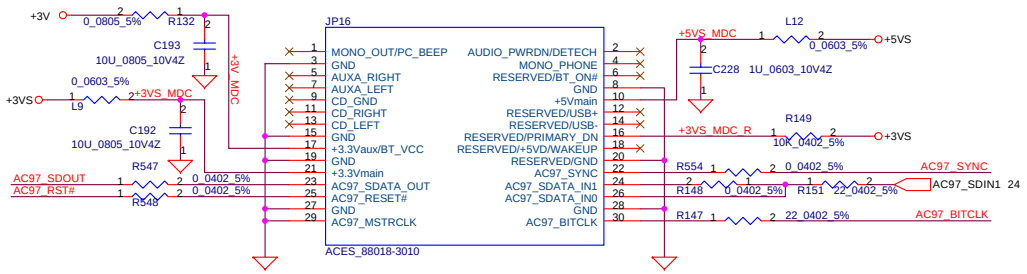


| Security Classification | Compal Secret Data | | |
|---|---|---|---|
| Issued Date | 2005/03/01 | Deciphered Date | 2006/03/01 |

THIS SHEET OF ENGINEERING DRAWING IS THE PROPRIETARY PROPERTY OF COMPAL ELECTRONICS, INC. AND CONTAINS CONFIDENTIAL AND TRADE SECRET INFORMATION. THIS SHEET MAY NOT BE TRANSFERED FROM THE CUSTODY OF THE COMPETENT DIVISION OF R&D DEPARTMENT EXCEPT AS AUTHORIZED BY COMPAL ELECTRONICS, INC. NEITHER THIS SHEET NOR THE INFORMATION IT CONTAINS MAY BE USED BY OR DISCLOSED TO ANY THIRD PARTY WITHOUT PRIOR WRITTEN CONSENT OF COMPAL ELECTRONICS, INC.

**Compal Electronics, Inc.**

Title: AC97 CODEC ALC250 Ver.C

Size | Document Number: EAL30 LA-2691 | Rev 1.0

Date: 星期四, 三月 03, 2005 | Sheet 36 of 52

# Audio AMP

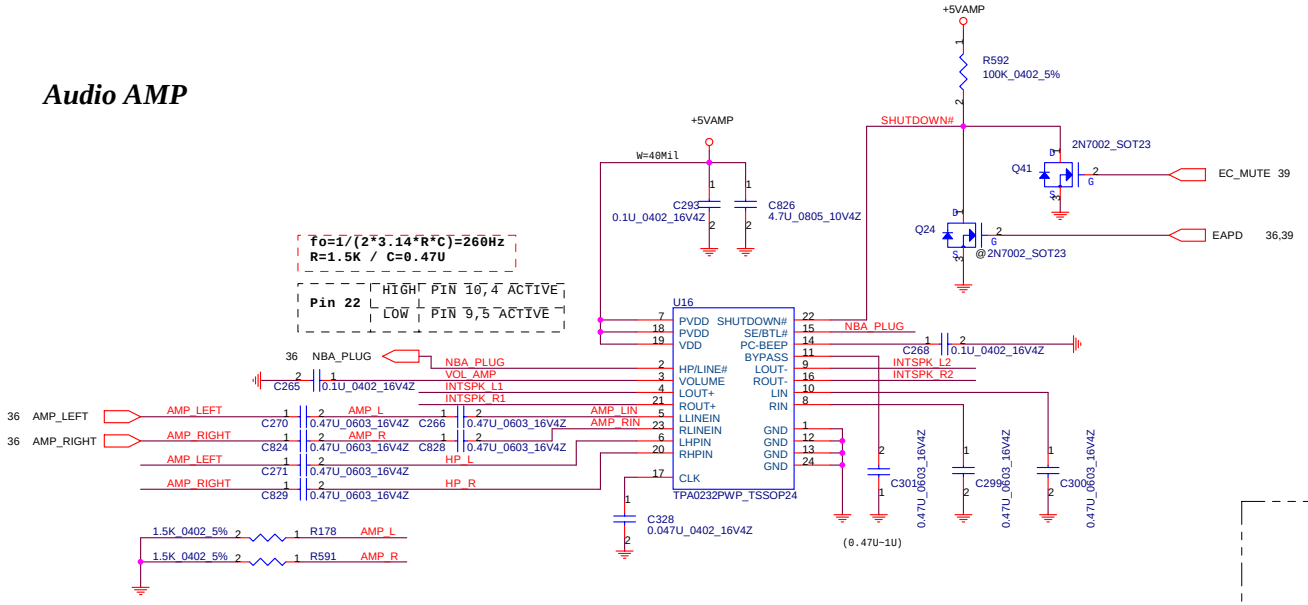


# Audio Board Connector

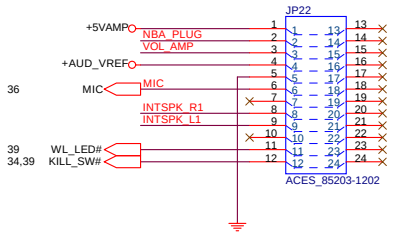


# Speaker Connector

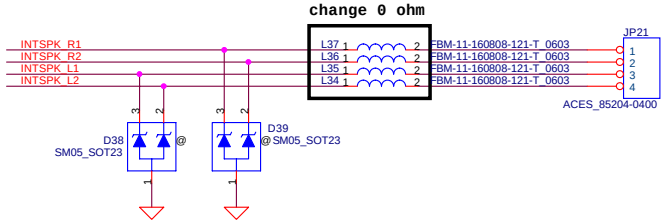


# Regulator for AMP

## +5VALW TO +5VLDO

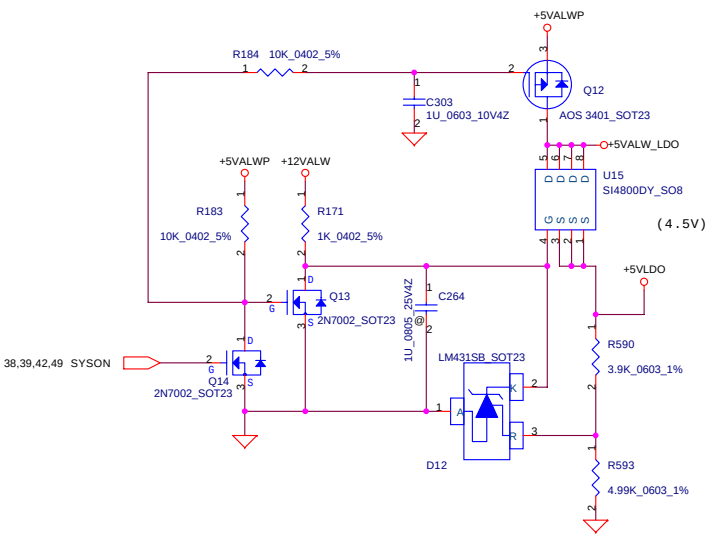


## +5VALW DECOUPLING

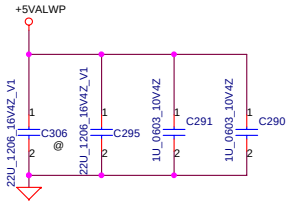


## +5VLDO DECOUPLING

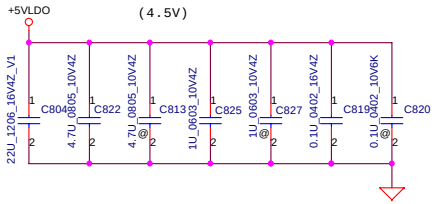


## +5VAMP TO +5VLDO

# Moat Bridge

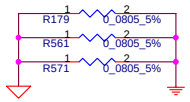


| Security Classification | Compal Secret Data | | |
|---|---|---|---|
| Issued Date | 2005/03/01 | Deciphered Date | 2006/03/01 |

THIS SHEET OF ENGINEERING DRAWING IS THE PROPRIETARY PROPERTY OF COMPAL ELECTRONICS, INC. AND CONTAINS CONFIDENTIAL AND TRADE SECRET INFORMATION. THIS SHEET MAY NOT BE TRANSFERED FROM THE CUSTODY OF THE COMPETENT DIVISION OF R&D DEPARTMENT EXCEPT AS AUTHORIZED BY COMPAL ELECTRONICS, INC. NEITHER THIS SHEET NOR THE INFORMATION IT CONTAINS MAY BE USED BY OR DISCLOSED TO ANY THIRD PARTY WITHOUT PRIOR WRITTEN CONSENT OF COMPAL ELECTRONICS, INC.

**Compal Electronics, Inc.**

Title: AMP & Audio Jack

Size: Custom | Document Number: EAL30 LA-2691 | Rev: 1.0

Date: 星期四, 三月 03, 2005 | Sheet 37 of 52

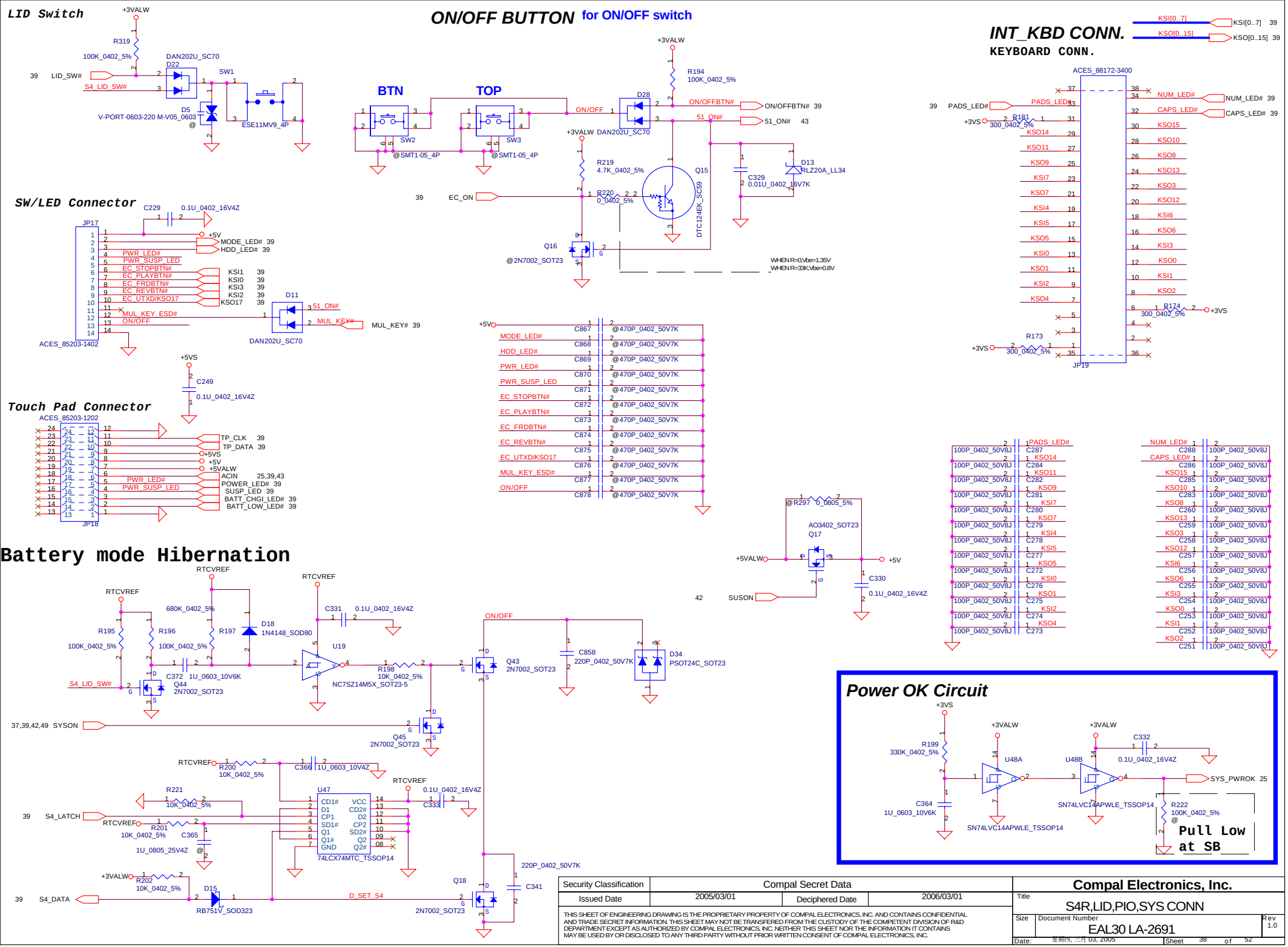
LID Switch
ON/OFF BUTTON for ON/OFF switch
INT_KBD CONN.
KEYBOARD CONN.
BTN
TOP
SW/LED Connector
Touch Pad Connector
Battery mode Hibernation
Power OK Circuit
Pull Low at SB
Security Classification
Compal Secret Data
Issued Date
2005/03/01
Deciphered Date
2006/03/01
Compal Electronics, Inc.
S4R,LID,PIO,SYS CONN
EAL30 LA-2691
Rev 1.0
Sheet 38 of 52

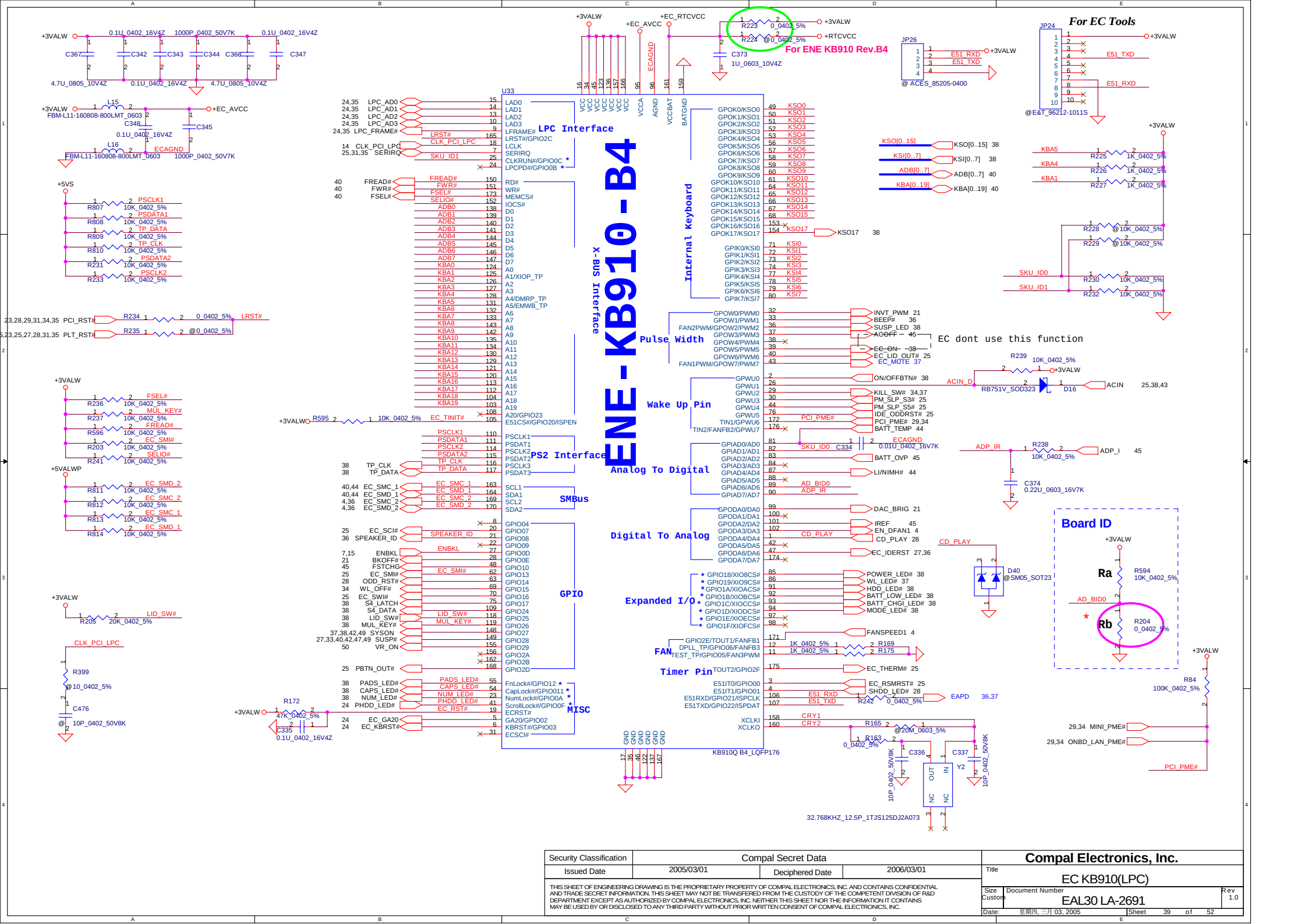


| Security Classification | Compal Secret Data | | |
|---|---|---|---|
| Issued Date | 2005/03/01 | Deciphered Date | 2006/03/01 |

THIS SHEET OF ENGINEERING DRAWING IS THE PROPRIETARY PROPERTY OF COMPAL ELECTRONICS, INC. AND CONTAINS CONFIDENTIAL AND TRADE SECRET INFORMATION. THIS SHEET MAY NOT BE TRANSFERED FROM THE CUSTODY OF THE COMPETENT DIVISION OF R&D DEPARTMENT EXCEPT AS AUTHORIZED BY COMPAL ELECTRONICS, INC. NEITHER THIS SHEET NOR THE INFORMATION IT CONTAINS MAY BE USED BY OR DISCLOSED TO ANY THIRD PARTY WITHOUT PRIOR WRITTEN CONSENT OF COMPAL ELECTRONICS, INC.

**Compal Electronics, Inc.**

Title: EC KB910(LPC)

Size: Custom | Document Number: EAL30 LA-2691 | Rev: 1.0

Date: 星期四, 三月 03, 2005 | Sheet 39 of 52

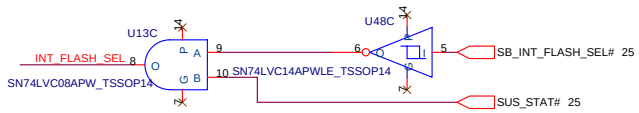


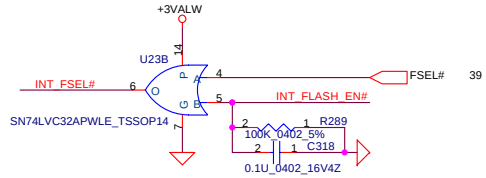


## 1MB Flash ROM

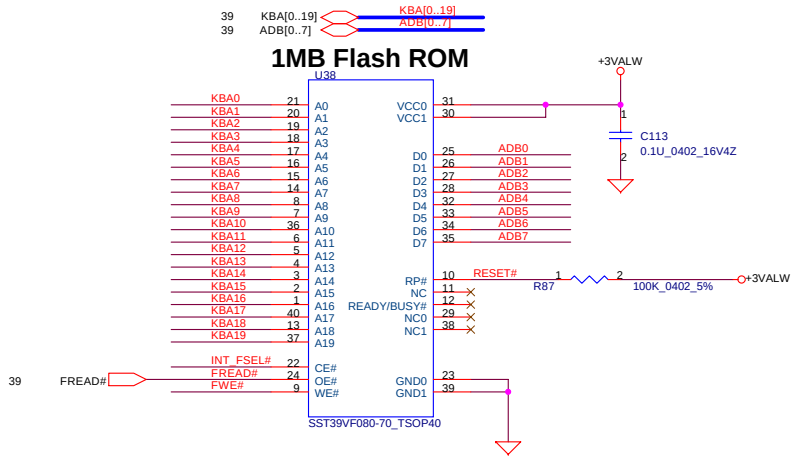


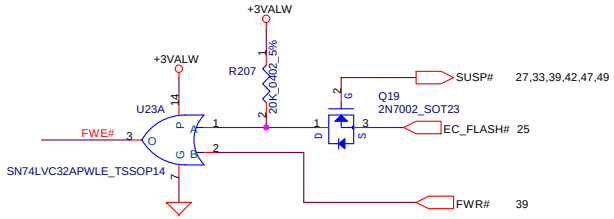


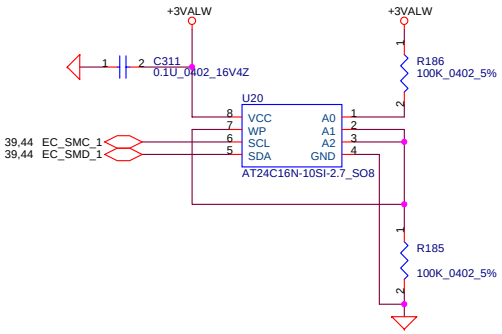


## 1MB ROM Socket

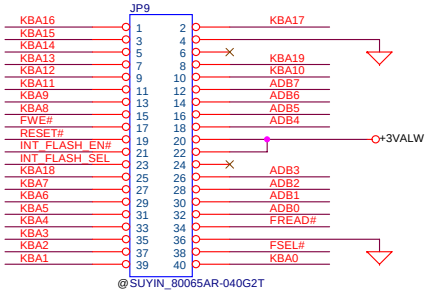


| Security Classification | Compal Secret Data | | |
|---|---|---|---|
| Issued Date | 2005/03/01 | Deciphered Date | 2006/03/01 |

THIS SHEET OF ENGINEERING DRAWING IS THE PROPRIETARY PROPERTY OF COMPAL ELECTRONICS, INC. AND CONTAINS CONFIDENTIAL AND TRADE SECRET INFORMATION. THIS SHEET MAY NOT BE TRANSFERED FROM THE CUSTODY OF THE COMPETENT DIVISION OF R&D DEPARTMENT EXCEPT AS AUTHORIZED BY COMPAL ELECTRONICS, INC. NEITHER THIS SHEET NOR THE INFORMATION IT CONTAINS MAY BE USED BY OR DISCLOSED TO ANY THIRD PARTY WITHOUT PRIOR WRITTEN CONSENT OF COMPAL ELECTRONICS, INC.

**Compal Electronics, Inc.**

Title: BIOS/WL-SW/Screw Hole/USB

Size | Document Number: EAL30 LA-2691 | Rev: 1.0

Date: 星期四, 三月 03, 2005 | Sheet 40 of 52

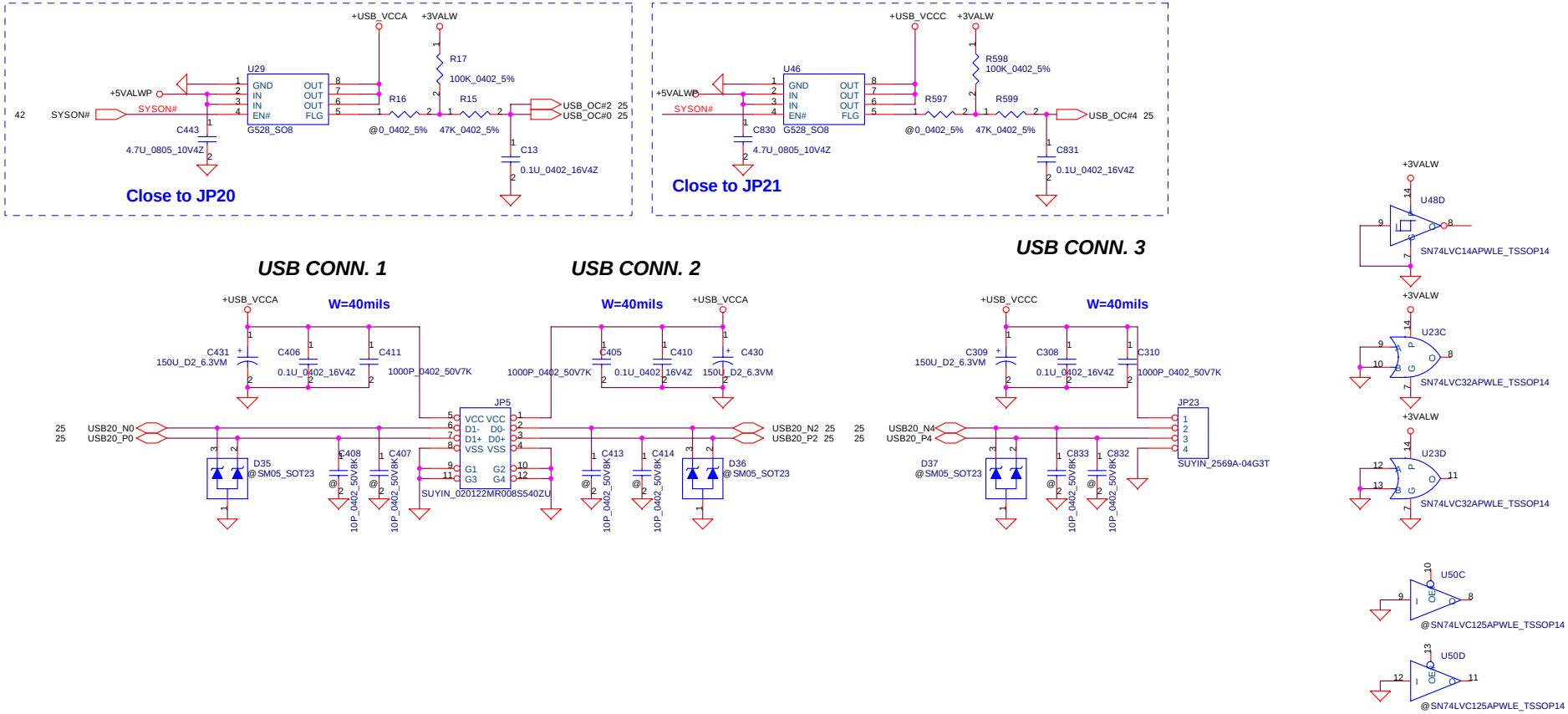


| Security Classification | Compal Secret Data | | |
|---|---|---|---|
| Issued Date | 2005/03/01 | Deciphered Date | 2006/03/01 |

THIS SHEET OF ENGINEERING DRAWING IS THE PROPRIETARY PROPERTY OF COMPAL ELECTRONICS, INC. AND CONTAINS CONFIDENTIAL AND TRADE SECRET INFORMATION. THIS SHEET MAY NOT BE TRANSFERED FROM THE CUSTODY OF THE COMPETENT DIVISION OF R&D DEPARTMENT EXCEPT AS AUTHORIZED BY COMPAL ELECTRONICS, INC. NEITHER THIS SHEET NOR THE INFORMATION IT CONTAINS MAY BE USED BY OR DISCLOSED TO ANY THIRD PARTY WITHOUT PRIOR WRITTEN CONSENT OF COMPAL ELECTRONICS, INC.

**Compal Electronics, Inc.**

Title: BIOS/WL-SW/Screw Hole/USB

Size | Document Number: EAL30 LA-2691 | Rev 1.0

Date: 星期四, 三月 03, 2005 | Sheet 41 of 52

## +3VALW to +3V Transfer

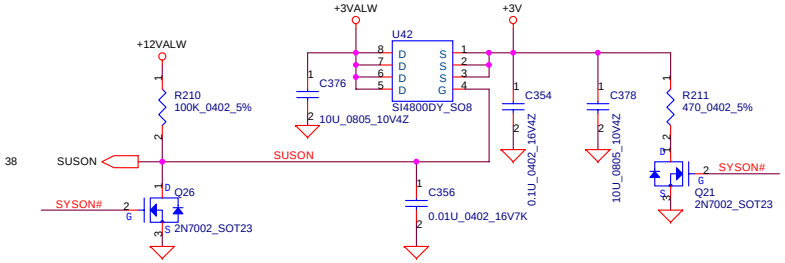


## +5VALW to +5VS Transfer

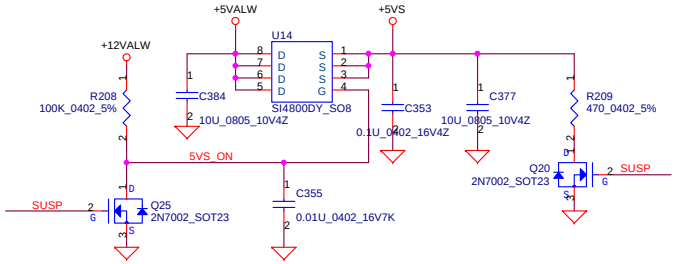


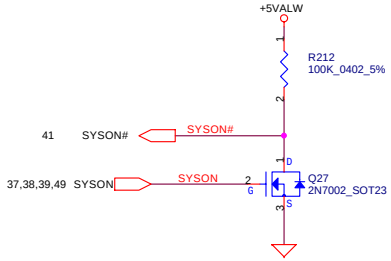


## +3VALW to +3VS Transfer

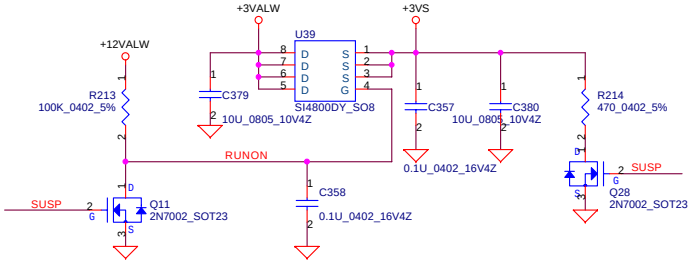


## +1.5VALW to +1.5VS Transfer

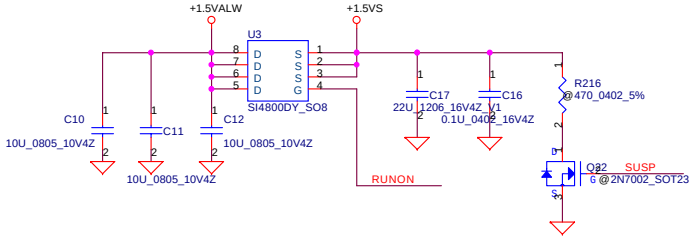


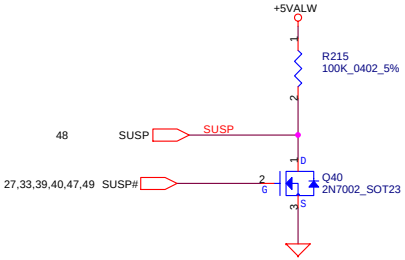


## +2.5V to +2.5VS Transfer

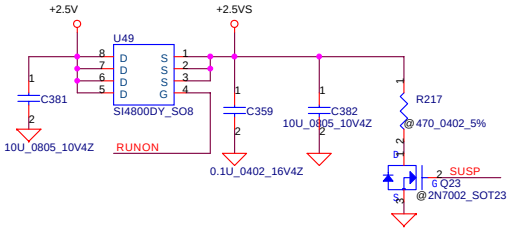


| | | | |
|---|---|---|---|
| Security Classification | Compal Secret Data | | |
| Issued Date | 2005/03/01 | Deciphered Date | 2006/03/01 |

THIS SHEET OF ENGINEERING DRAWING IS THE PROPRIETARY PROPERTY OF COMPAL ELECTRONICS, INC. AND CONTAINS CONFIDENTIAL AND TRADE SECRET INFORMATION. THIS SHEET MAY NOT BE TRANSFERED FROM THE CUSTODY OF THE COMPETENT DIVISION OF R&D DEPARTMENT EXCEPT AS AUTHORIZED BY COMPAL ELECTRONICS, INC. NEITHER THIS SHEET NOR THE INFORMATION IT CONTAINS MAY BE USED BY OR DISCLOSED TO ANY THIRD PARTY WITHOUT PRIOR WRITTEN CONSENT OF COMPAL ELECTRONICS, INC.

**Compal Electronics, Inc.**

Title: DC/DC Interface

Size | Document Number: EAL30 LA-2691 | Rev 1.0

Date: 星期四, 三月 03, 2005 | Sheet 42 of 52

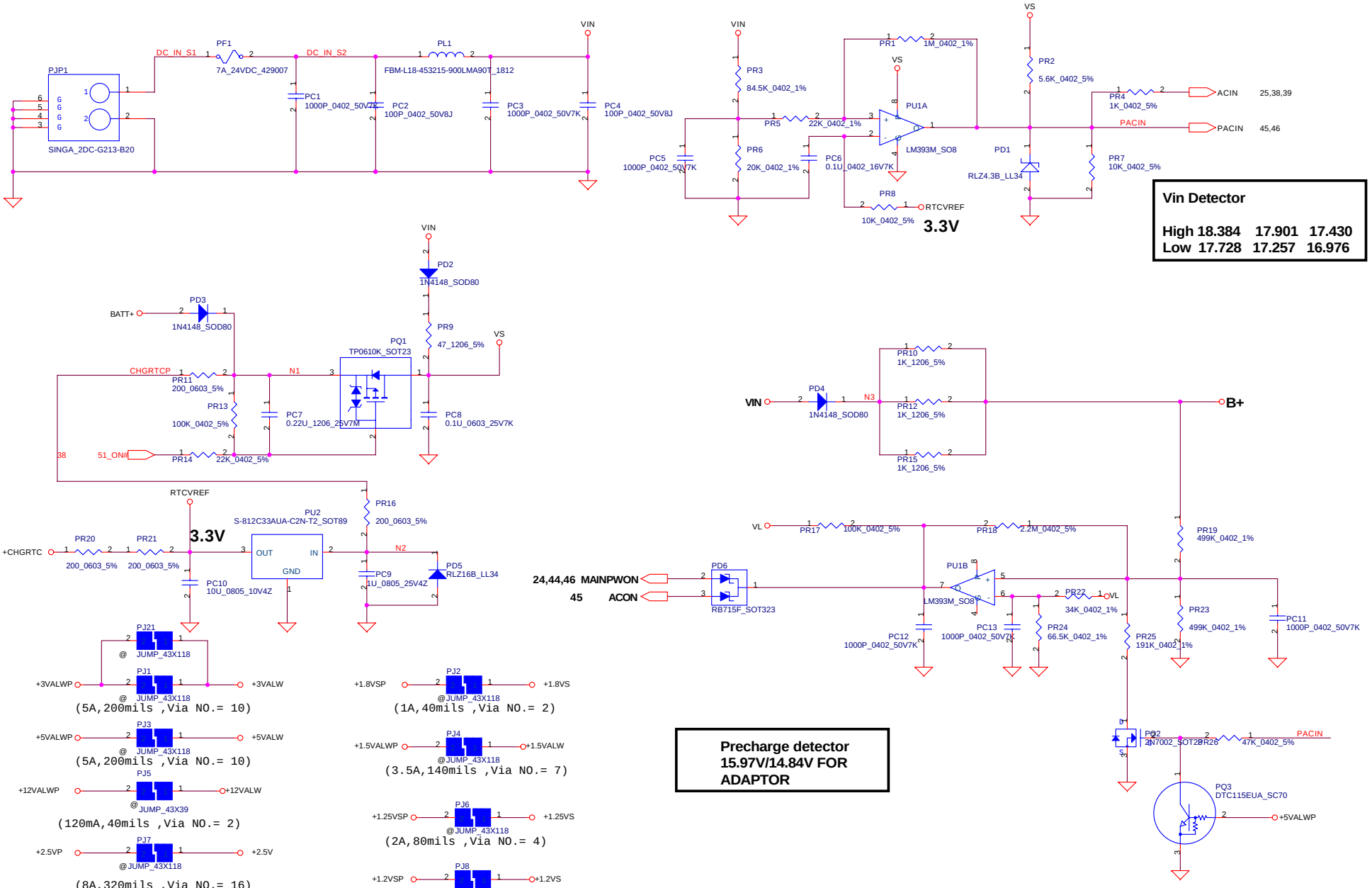


| Security Classification | Compal Secret Data | | |
|---|---|---|---|
| Issued Date | 2005/03/01 | Deciphered Date | 2006/03/01 |

THIS SHEET OF ENGINEERING DRAWING IS THE PROPRIETARY PROPERTY OF COMPAL ELECTRONICS, INC. AND CONTAINS CONFIDENTIAL AND TRADE SECRET INFORMATION. THIS SHEET MAY NOT BE TRANSFERED FROM THE CUSTODY OF THE COMPETENT DIVISION OF R&D DEPARTMENT EXCEPT AS AUTHORIZED BY COMPAL ELECTRONICS, INC. NEITHER THIS SHEET NOR THE INFORMATION IT CONTAINS MAY BE USED BY OR DISCLOSED TO ANY THIRD PARTY WITHOUT PRIOR WRITTEN CONSENT OF COMPAL ELECTRONICS, INC.

**Compal Electronics, Inc.**

Title: DCIN & DETECTOR

Size | Document Number: EAL30 LA-2691 | Rev: 1.0

Date: 星期五, 三月 04, 2005 | Sheet 43 of 52

**PH1 under CPU botten side :**
CPU thermal protection at 84 degree C
Recovery at 45 degree C

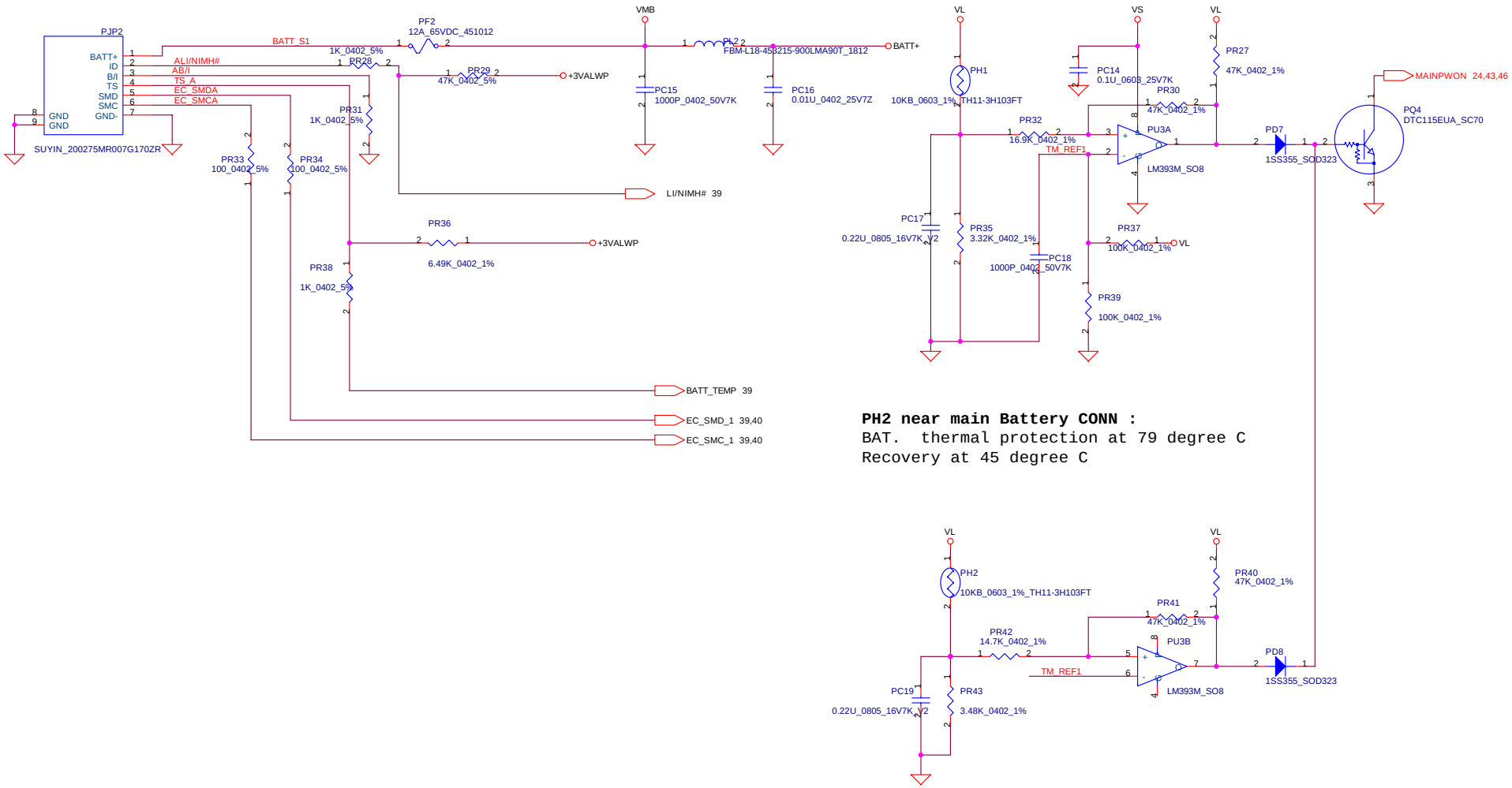


**PH2 near main Battery CONN :**
BAT. thermal protection at 79 degree C
Recovery at 45 degree C




| Security Classification | Compal Secret Data | | |
|---|---|---|---|
| Issued Date | 2005/03/01 | Deciphered Date | 2006/03/01 |

THIS SHEET OF ENGINEERING DRAWING IS THE PROPRIETARY PROPERTY OF COMPAL ELECTRONICS, INC. AND CONTAINS CONFIDENTIAL AND TRADE SECRET INFORMATION. THIS SHEET MAY NOT BE TRANSFERED FROM THE CUSTODY OF THE COMPETENT DIVISION OF R&D DEPARTMENT EXCEPT AS AUTHORIZED BY COMPAL ELECTRONICS, INC. NEITHER THIS SHEET NOR THE INFORMATION IT CONTAINS MAY BE USED BY OR DISCLOSED TO ANY THIRD PARTY WITHOUT PRIOR WRITTEN CONSENT OF COMPAL ELECTRONICS, INC.

**Compal Electronics, Inc.**

Title: BATTERY CONN / OTP

Size | Document Number: EAL30 LA-2691 | Rev 1.0

Date: 星期五, 三月 04, 2005 | Sheet 44 of 52

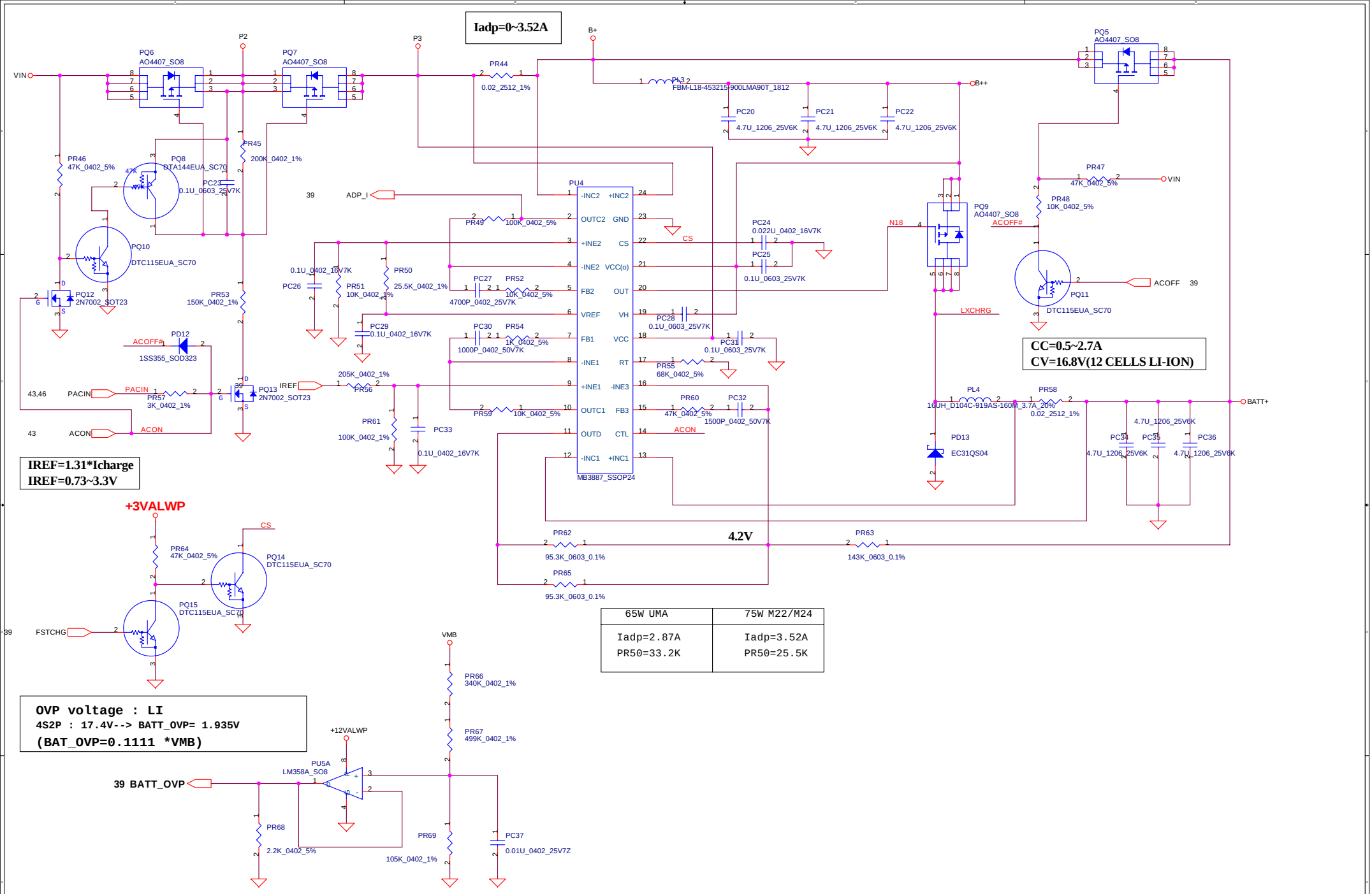


| 65W UMA | 75W M22/M24 |
|---|---|
| Iadp=2.87A<br>PR50=33.2K | Iadp=3.52A<br>PR50=25.5K |

| | | | |
|---|---|---|---|
| Security Classification | Compal Secret Data | | |
| Issued Date | 2005/03/01 | Deciphered Date | 2006/03/01 |

THIS SHEET OF ENGINEERING DRAWING IS THE PROPRIETARY PROPERTY OF COMPAL ELECTRONICS, INC. AND CONTAINS CONFIDENTIAL AND TRADE SECRET INFORMATION. THIS SHEET MAY NOT BE TRANSFERED FROM THE CUSTODY OF THE COMPETENT DIVISION OF R&D DEPARTMENT EXCEPT AS AUTHORIZED BY COMPAL ELECTRONICS, INC. NEITHER THIS SHEET NOR THE INFORMATION IT CONTAINS MAY BE USED BY OR DISCLOSED TO ANY THIRD PARTY WITHOUT PRIOR WRITTEN CONSENT OF COMPAL ELECTRONICS, INC.

**Compal Electronics, Inc.**

Title: CHARGER

Size: | Document Number: EAL30 LA-2691 | Rev: 1.0

Date: 星期五, 三月 04, 2005 | Sheet 45 of 52

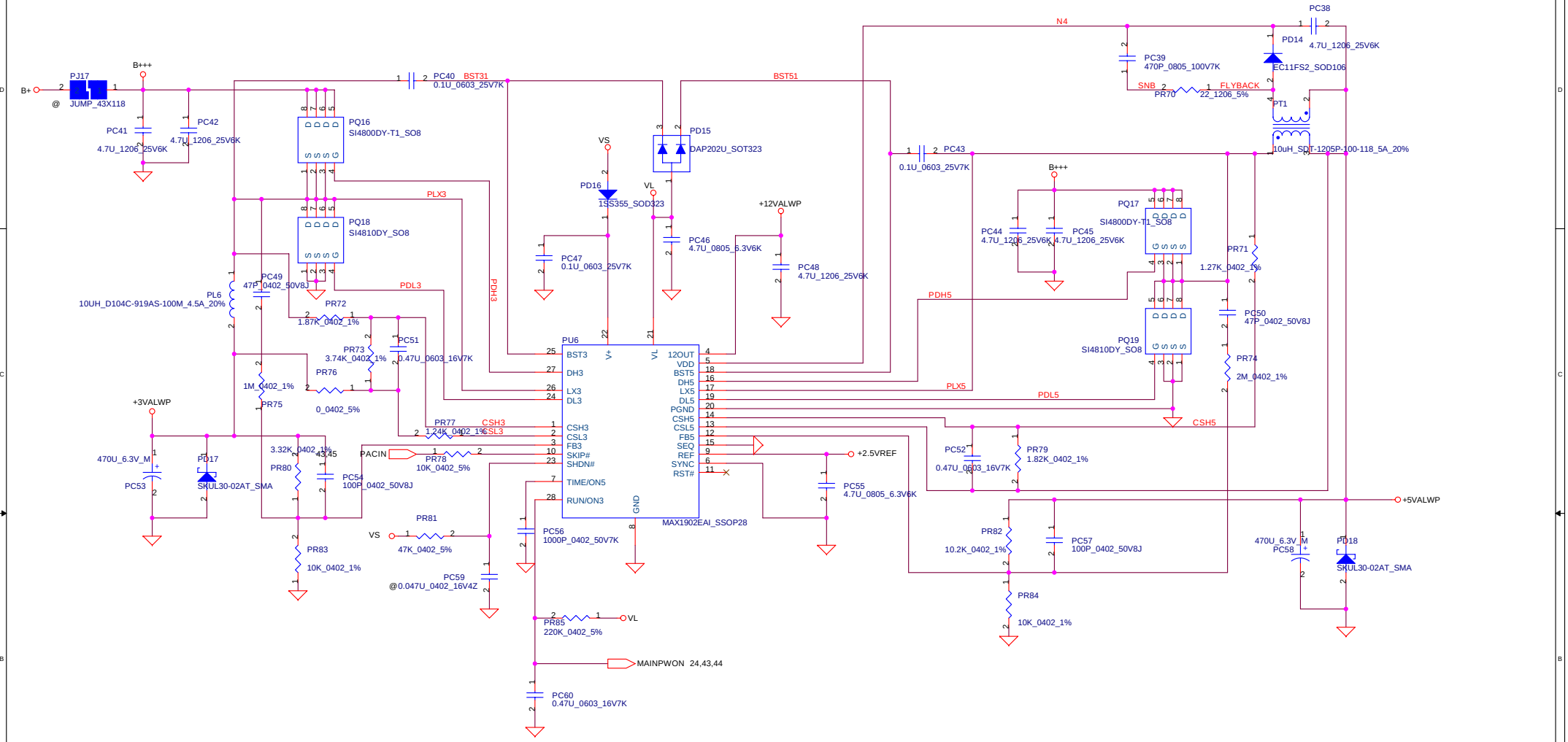


| Security Classification | Compal Secret Data | | |
|---|---|---|---|
| Issued Date | 2005/03/01 | Deciphered Date | 2006/03/01 |

THIS SHEET OF ENGINEERING DRAWING IS THE PROPRIETARY PROPERTY OF COMPAL ELECTRONICS, INC. AND CONTAINS CONFIDENTIAL AND TRADE SECRET INFORMATION. THIS SHEET MAY NOT BE TRANSFERED FROM THE CUSTODY OF THE COMPETENT DIVISION OF R&D DEPARTMENT EXCEPT AS AUTHORIZED BY COMPAL ELECTRONICS, INC. NEITHER THIS SHEET NOR THE INFORMATION IT CONTAINS MAY BE USED BY OR DISCLOSED TO ANY THIRD PARTY WITHOUT PRIOR WRITTEN CONSENT OF COMPAL ELECTRONICS, INC.

**Compal Electronics, Inc.**

Title: 3V / 5V / 12V

Size | Document Number: EAL30 LA-2691 | Rev 1.0

Date: 星期五, 三月 04, 2005 | Sheet 46 of 52

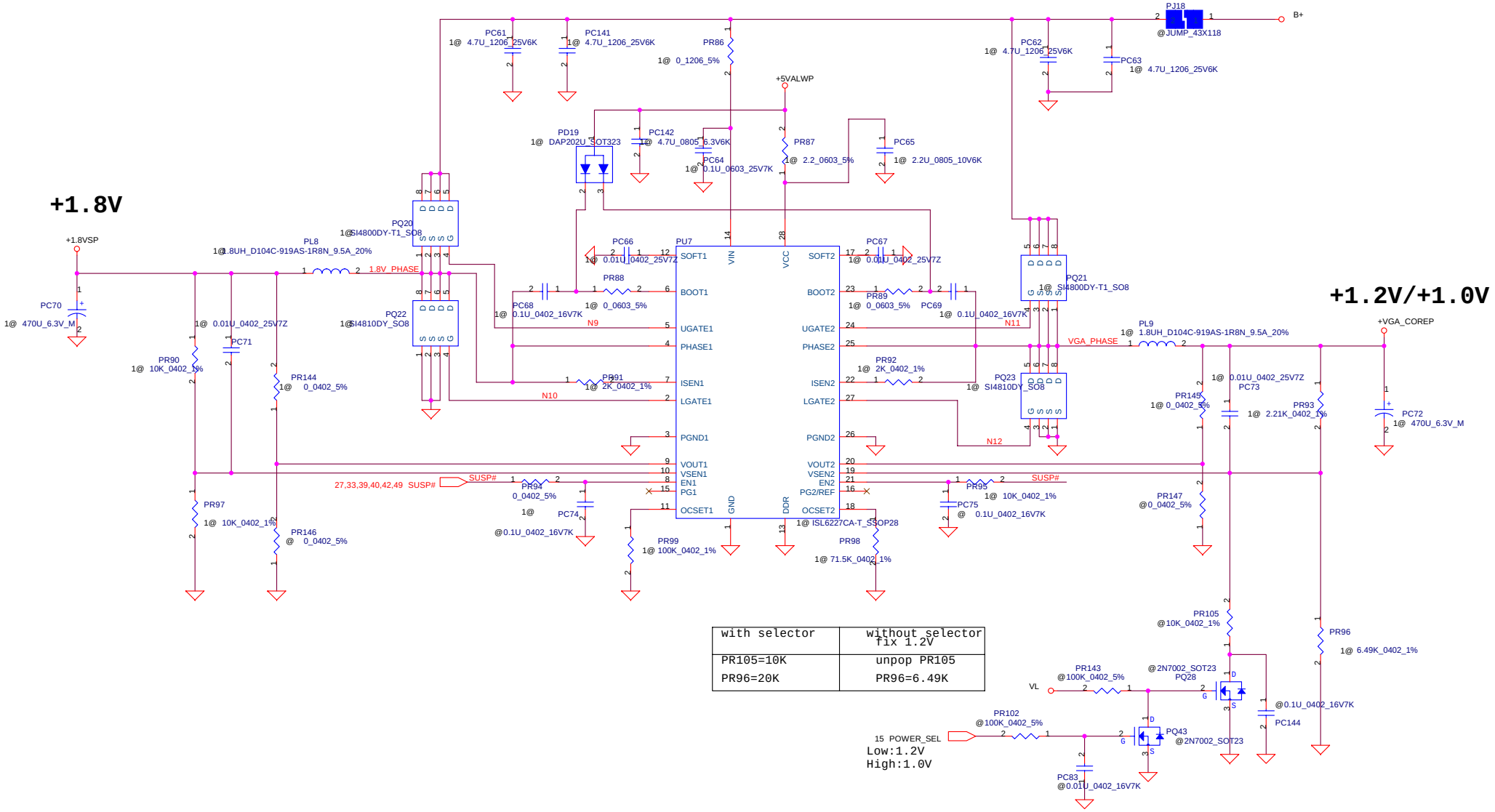


| with selector | without selector fix 1.2V |
|---|---|
| PR105=10K | unpop PR105 |
| PR96=20K | PR96=6.49K |

| Security Classification | Compal Secret Data | | |
|---|---|---|---|
| Issued Date | 2005/03/01 | Deciphered Date | 2006/03/01 |

THIS SHEET OF ENGINEERING DRAWING IS THE PROPRIETARY PROPERTY OF COMPAL ELECTRONICS, INC. AND CONTAINS CONFIDENTIAL AND TRADE SECRET INFORMATION. THIS SHEET MAY NOT BE TRANSFERED FROM THE CUSTODY OF THE COMPETENT DIVISION OF R&D DEPARTMENT EXCEPT AS AUTHORIZED BY COMPAL ELECTRONICS, INC. NEITHER THIS SHEET NOR THE INFORMATION IT CONTAINS MAY BE USED BY OR DISCLOSED TO ANY THIRD PARTY WITHOUT PRIOR WRITTEN CONSENT OF COMPAL ELECTRONICS, INC.

**Compal Electronics, Inc.**

Title: 1.8V / VGA_CORE

Size | Document Number: EAL30 LA-2691 | Rev: 1.0

Date: 星期五, 三月 04, 2005 | Sheet 47 of 52

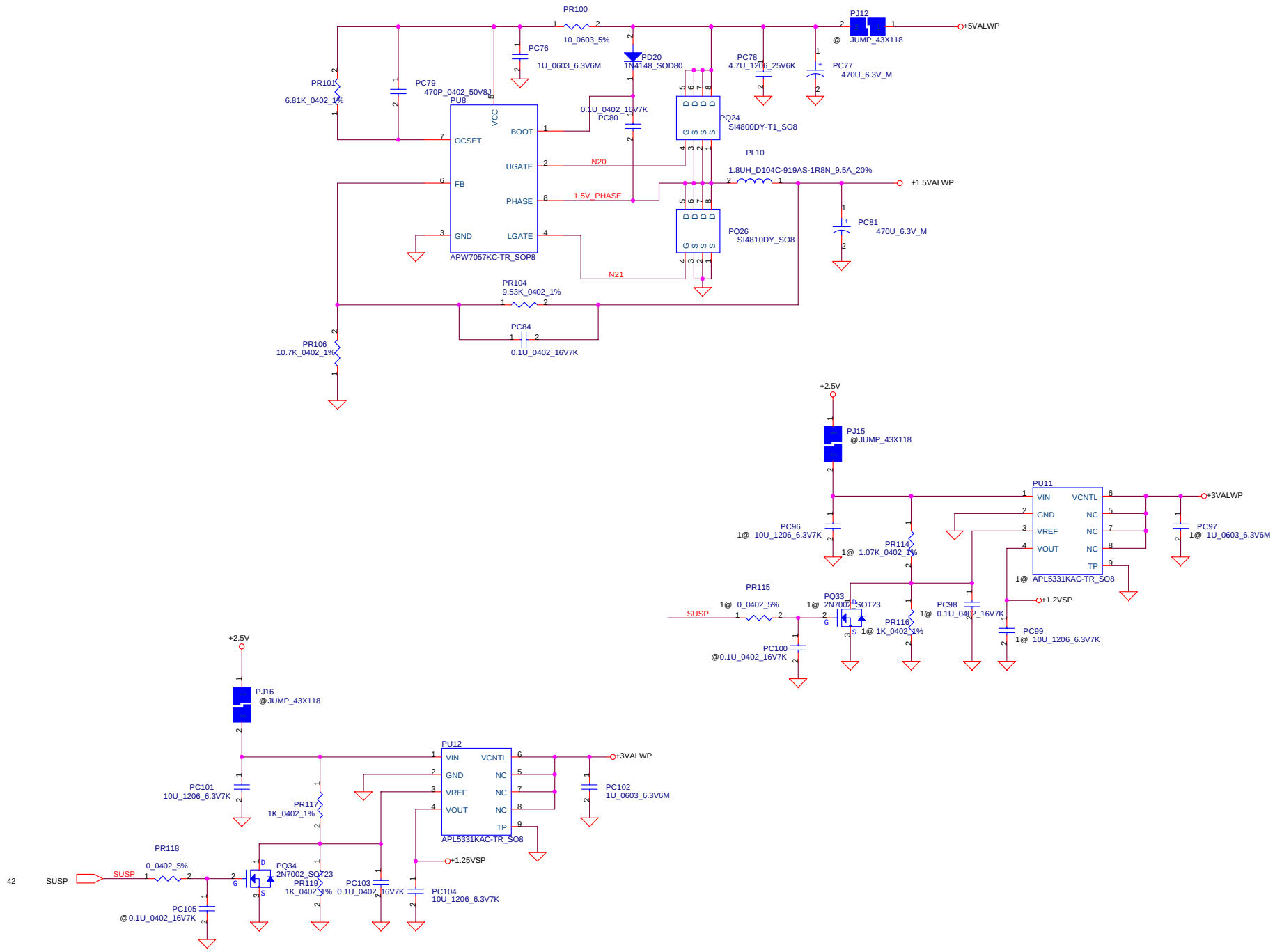


| Security Classification | Compal Secret Data | | |
|---|---|---|---|
| Issued Date | 2005/03/01 | Deciphered Date | 2006/03/01 |

THIS SHEET OF ENGINEERING DRAWING IS THE PROPRIETARY PROPERTY OF COMPAL ELECTRONICS, INC. AND CONTAINS CONFIDENTIAL AND TRADE SECRET INFORMATION. THIS SHEET MAY NOT BE TRANSFERED FROM THE CUSTODY OF THE COMPETENT DIVISION OF R&D DEPARTMENT EXCEPT AS AUTHORIZED BY COMPAL ELECTRONICS, INC. NEITHER THIS SHEET NOR THE INFORMATION IT CONTAINS MAY BE USED BY OR DISCLOSED TO ANY THIRD PARTY WITHOUT PRIOR WRITTEN CONSENT OF COMPAL ELECTRONICS, INC.

**Compal Electronics, Inc.**

Title: 1.5V / 1.25V / 1.2V

Size | Document Number: EAL30 LA-2691 | Rev: 1.0

Date: 星期五, 三月 04, 2005 | Sheet 48 of 52

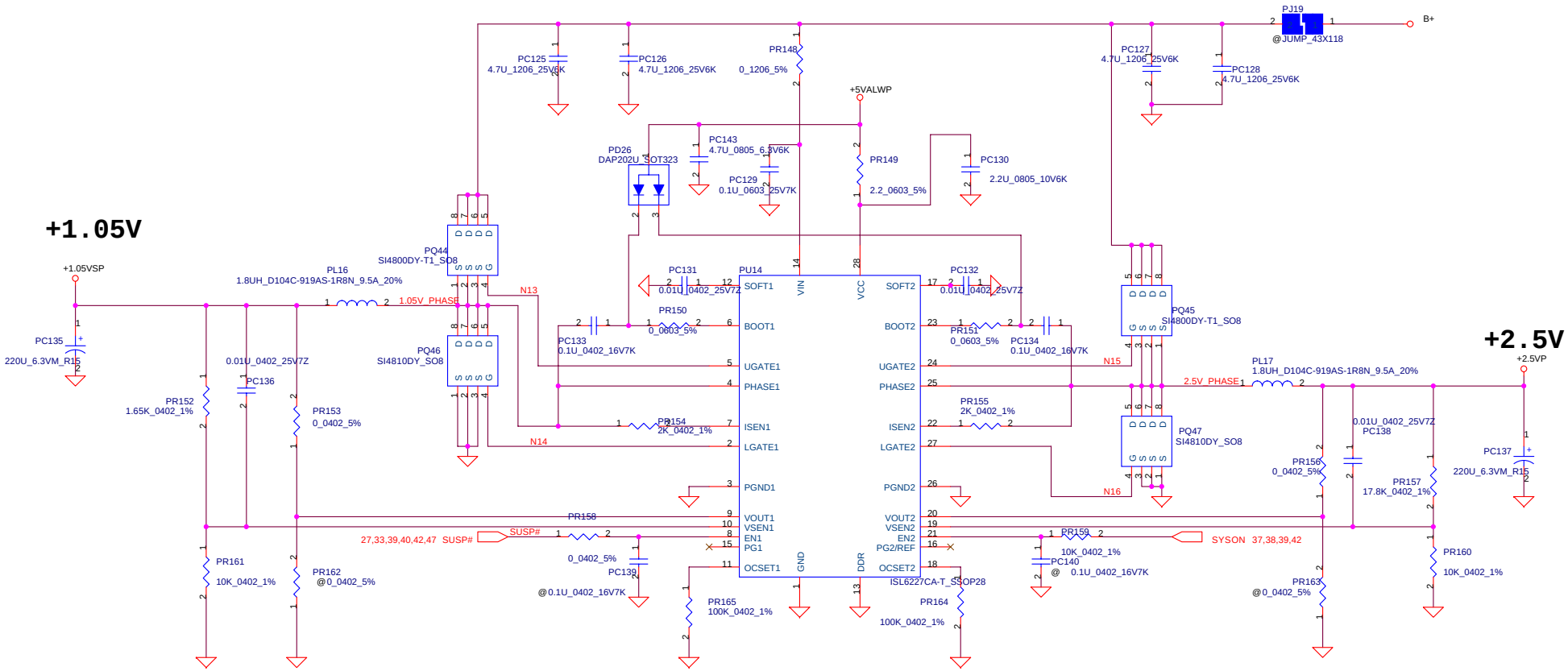


| Security Classification | Compal Secret Data | | |
|---|---|---|---|
| Issued Date | 2005/03/01 | Deciphered Date | 2006/03/01 |

THIS SHEET OF ENGINEERING DRAWING IS THE PROPRIETARY PROPERTY OF COMPAL ELECTRONICS, INC. AND CONTAINS CONFIDENTIAL AND TRADE SECRET INFORMATION. THIS SHEET MAY NOT BE TRANSFERED FROM THE CUSTODY OF THE COMPETENT DIVISION OF R&D DEPARTMENT EXCEPT AS AUTHORIZED BY COMPAL ELECTRONICS, INC. NEITHER THIS SHEET NOR THE INFORMATION IT CONTAINS MAY BE USED BY OR DISCLOSED TO ANY THIRD PARTY WITHOUT PRIOR WRITTEN CONSENT OF COMPAL ELECTRONICS, INC.

**Compal Electronics, Inc.**

Title: 2.5V / 1.05V

Size | Document Number: EAL30 LA-2691 | Rev: 1.0

Date: 星期五, 三月 04, 2005 | Sheet 49 of 52

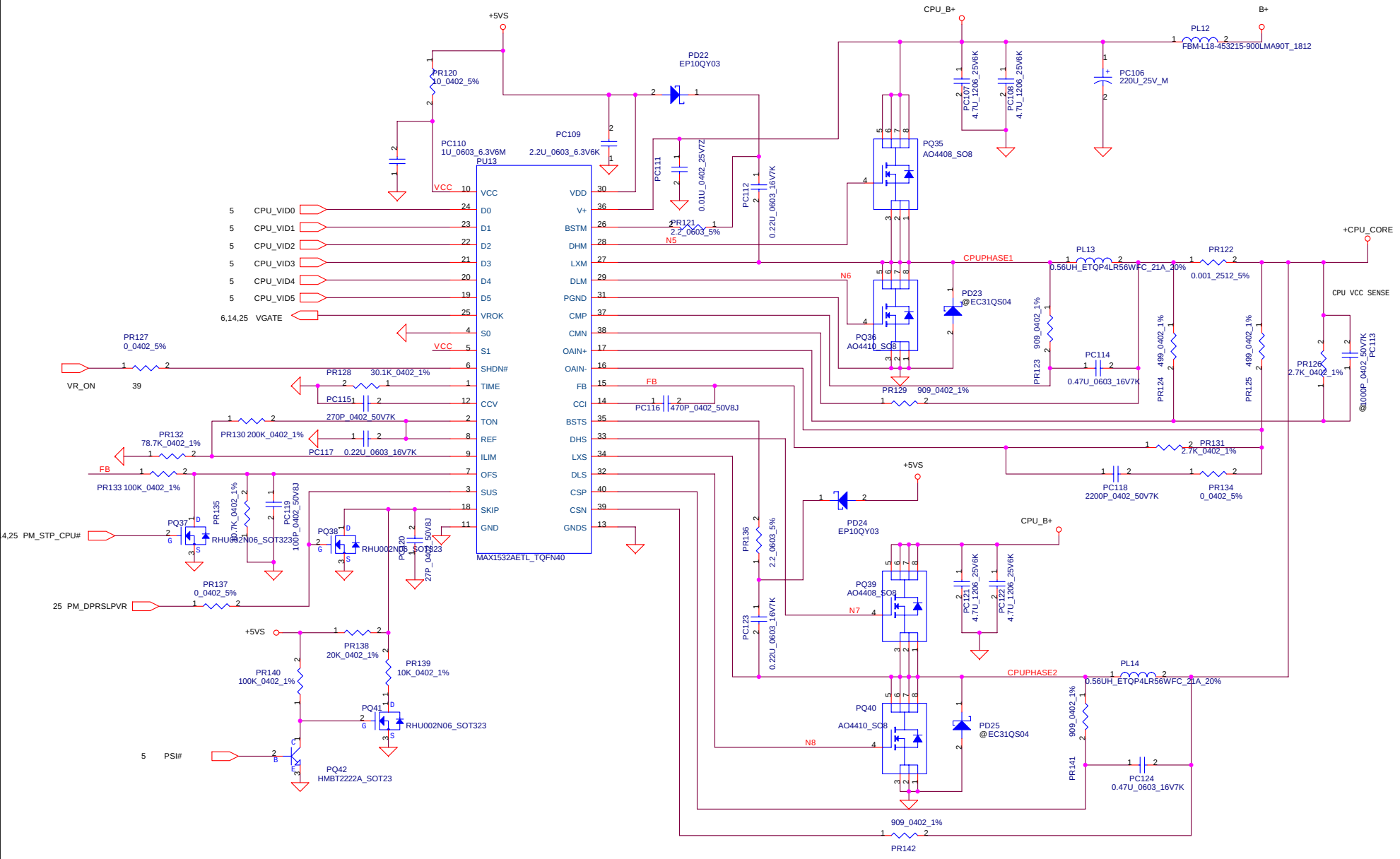


| Security Classification | Compal Secret Data | | |
|---|---|---|---|
| Issued Date | 2005/03/01 | Deciphered Date | 2006/03/01 |

THIS SHEET OF ENGINEERING DRAWING IS THE PROPRIETARY PROPERTY OF COMPAL ELECTRONICS, INC. AND CONTAINS CONFIDENTIAL AND TRADE SECRET INFORMATION. THIS SHEET MAY NOT BE TRANSFERED FROM THE CUSTODY OF THE COMPETENT DIVISION OF R&D DEPARTMENT EXCEPT AS AUTHORIZED BY COMPAL ELECTRONICS, INC. NEITHER THIS SHEET NOR THE INFORMATION IT CONTAINS MAY BE USED BY OR DISCLOSED TO ANY THIRD PARTY WITHOUT PRIOR WRITTEN CONSENT OF COMPAL ELECTRONICS, INC.

**Compal Electronics, Inc.**

Title: CPU_CORE

Size | Document Number: EAL30 LA-2691 | Rev 1.0

Date: 星期五, 三月 04, 2005 | Sheet 50 of 52

## REV 0.2

| Date | Page | Location | Description |
|---|---|---|---|
| 12/06 | P.38 | Add ESD diode D34 | for ESD protection |
| 12/06 | P.37 | Delete C267 | For sound volume change slow issue |
| 12/06 | P.32 | ADD C854 | To solve PCI 4510 1394 issue |
| 12/06 | P.21 | Change L4,L5 to FBM-L11-201209-121LMT | To solve EMI issue |
| 12/26 | P.22 | Change C398,C397 from 270P to 100P<br>C401,C402 from 330P to 100P | For customer request |
| 12/26 | P.22 | Change R320,R321,R7,R8,R9 from 150_0402_5%<br>to 150_0402_1% | For customer request |
| 12/26 | P.07 | Change R124,R127,R119,R531,R532<br>from 150_0402_5% to 150_0402_1% | For customer request |
| 12/26 | P.15 | Change R273,R274,R267,R270,R271<br>from 150_0402_5% to 150_0402_1% | For customer request |
| 12/26 | P.32 | Change 5in1 SMWP design ,Add R836,R837 | follow EAT10 design |

## REV 0.3

| Date | Page | Location | Description |
|---|---|---|---|
| 2/06 | P.09 | Change R160 size to 0805 0 ohm | Add rating current |
| 2/06 | P.24 | Add C859,C864 change R841 to 2.2 ohm | For TV-out wave issue |
| 2/06 | P.32 | Add R838,R839 | Change 5in1 card reader discharge control from card detect to card power enable . |
| 2/06 | P.27 | Reserve R840,C862,X5 | Reserve for chip issue |

## REV 1.0

| Date | Page | Location | Description |
|---|---|---|---|
| 2/14 | P.34 | ADD R842 | Reserve for CyberTan issue |
| 2/26 | P.36 | Add C866 | Add for solve modem card noise |
| 2/26 | P.24 | Add C865 | Add for solve 3Dmark low performace issue |
| 2/26 | P.24 | Add R842 | Reserve for New Wireless Lan Card |


| Security Classification | Compal Secret Data | | |
|---|---|---|---|
| Issued Date | | Deciphered Date | |

THIS SHEET OF ENGINEERING DRAWING IS THE PROPRIETARY PROPERTY OF COMPAL ELECTRONICS, INC. AND CONTAINS CONFIDENTIAL AND TRADE SECRET INFORMATION. THIS SHEET MAY NOT BE TRANSFERED FROM THE CUSTODY OF THE COMPETENT DIVISION OF R&D DEPARTMENT EXCEPT AS AUTHORIZED BY COMPAL ELECTRONICS, INC. NEITHER THIS SHEET NOR THE INFORMATION IT CONTAINS MAY BE USED BY OR DISCLOSED TO ANY THIRD PARTY WITHOUT PRIOR WRITTEN CONSENT OF COMPAL ELECTRONICS, INC.


**Compal Electronics, Inc.**

Title: HW PIR

Size | Document Number: EAL30 LA-2691 | Rev 1.0

Date: 星期五, 三月 04, 2005 | Sheet 51 of 52

| Page | Location | Description | Reason |
|---|---|---|---|
| 45 | PR50 | Change from 33.2K_0402_1% to 25.5K_0402_1% | For ATI M22/M24 sku, update to 75W |
| 47 | PR96 | Change from 20K_0402_1% to 6.49K_0402_1%<br>Unpop PR105,PQ28,PR143,PQ43,PR102,PC83,PC144 | Fix POWER_SEL at 1.2V |
| 47 | PR98 | Change from 90.9K_0402_1% to 71.5K_0402_1% | Enlarge VGA_CORE OCP point |
| 43 | PD3 | Change from RB751 to 1N4148 | For common design |
| 43 | PR9 | Change from 33_1206_5% to 47_1206_5% | For common design |
| 48 | | Delete PC96,PR114,PU11,PC97,PR115,PQ33,PR116, PC98,PC99 | For UMA SKU, delete 1.2VS |
| 48 | PR104<br>PR106 | Change PR104 from 9.09K_0402_1% to 9.53K_0402_1%<br>Change PR106 from 10.5K_0402_1% to 10.7K_0402_1% | For HW requirement to raise 1.5V voltage |


| Security Classification | Compal Secret Data | | |
|---|---|---|---|
| Issued Date | 2005/03/01 | Deciphered Date | 2006/03/01 |

THIS SHEET OF ENGINEERING DRAWING IS THE PROPRIETARY PROPERTY OF COMPAL ELECTRONICS, INC. AND CONTAINS CONFIDENTIAL AND TRADE SECRET INFORMATION. THIS SHEET MAY NOT BE TRANSFERED FROM THE CUSTODY OF THE COMPETENT DIVISION OF R&D DEPARTMENT EXCEPT AS AUTHORIZED BY COMPAL ELECTRONICS, INC. NEITHER THIS SHEET NOR THE INFORMATION IT CONTAINS MAY BE USED BY OR DISCLOSED TO ANY THIRD PARTY WITHOUT PRIOR WRITTEN CONSENT OF COMPAL ELECTRONICS, INC.


**Compal Electronics, Inc.**

Title: POWER PIR

Size | Document Number: EAL30 LA-2691 | Rev 1.0

Date: 星期五, 三月 04, 2005 | Sheet 52 of 52

s-manuals.com