Kapalua Schematic

REV : X03

BDQ11/LA1601 Schematic with Capture CIS and Function field
uFCPGA Banias
02-12-2003
REV: 0.5

```
 @ : Depop Component
1@ : Depop Component
2@ : Pop Component
```

DELL CONFIDENTIAL/PROPRIETARY

Compal Electronics, Inc.

Title	Cover Sheet	
Size	Document Number: BDQ11/LA-1601	Rev 0.5
Date: 星期三, 二月 12, 2003	Sheet 1 of 56	

hayami@hotmail.com

Compal confidential

Block Diagram

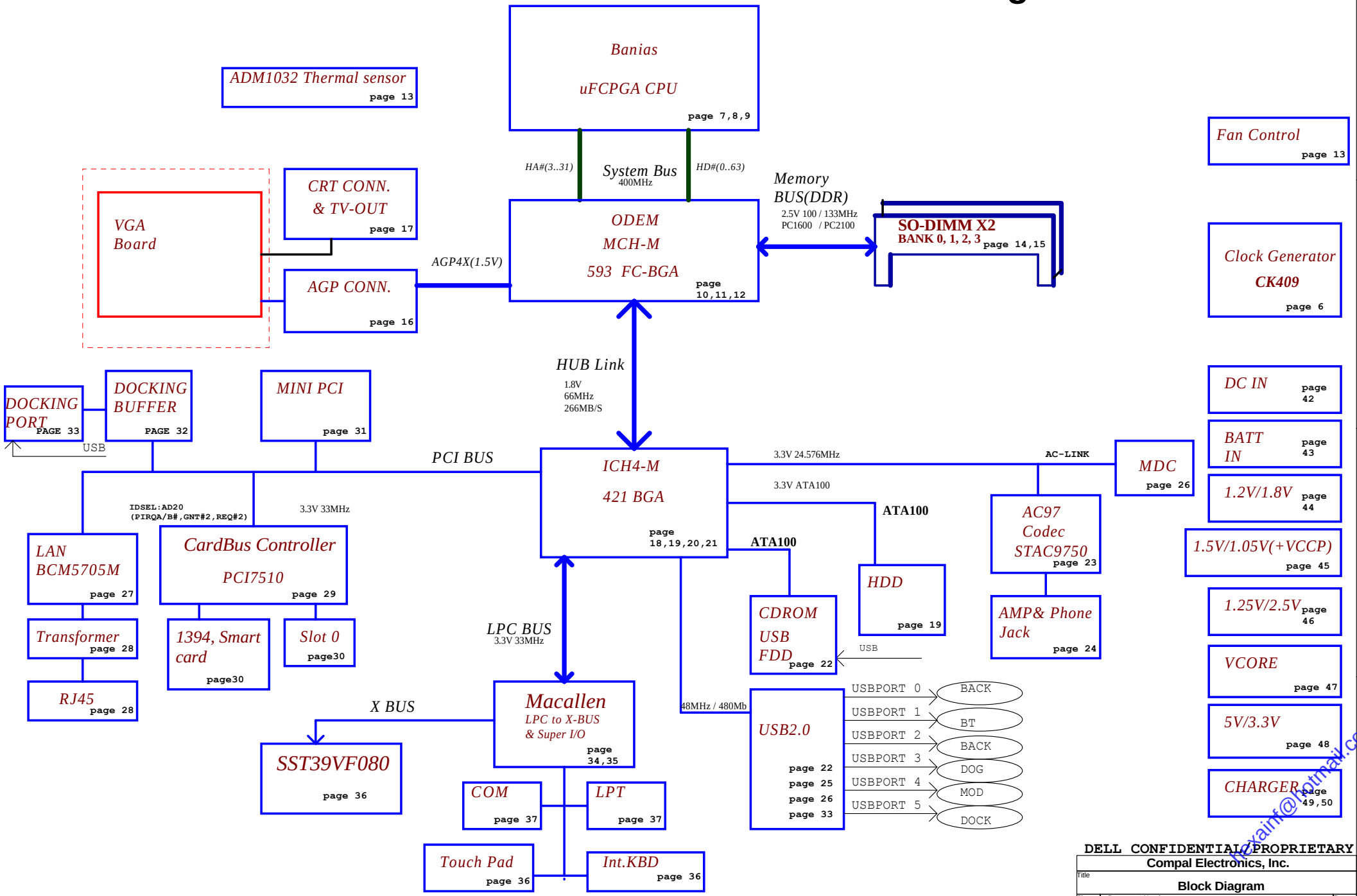

DELL CONFIDENTIAL/PROPRIETARY

Compal Electronics, Inc.

Title	Block Diagram	
Size	Document Number BDQ11/LA-1601	Rev 0.5
Date: 星期四, 二月 06, 2003	Sheet 2 of 56	

hexainf@hotmail.com

PM TABLE

State \ power plane	+3VALW +5VALW	+3VSUS +5VSUS +2.5V_MEM +1.5VSUS	+5VRUN +3VRUN +1.8VRUN +1.5VRUN +1.2VRUN +VCC_CORE +VCCP +12V
S0	ON	ON	ON
S1	ON	ON	ON
S3	ON	ON	OFF
S5 S4/AC	ON	OFF	OFF
S5 S4/AC don't exist	OFF	OFF	OFF

PCI TABLE

PCI DEVICE	IDSEL	REQ#/GNT#	PIRQ
CARD BUS	AD17	1	D,C
LAN	AD16	4	C
DOCK	AD24	0	B
MINI PCI	AD19	3	D,B(NP)
VGA			A,B(NP)

USB TABLE

USB PORT#	DESTINATION
0	BACK
1	BLUETOOTH
2	BACK
3	DOG
4	MOD
5	DOCK

DELL CONFIDENTIAL/PROPRIETARY

Compal Electronics, Inc.

Title: Index and Config.

Size | Document Number: BDQ11/LA-1601 | Rev 0.5

Date: 星期四, 二月 06, 2003 | Sheet 3 of 56

hexainf@hotmail.com

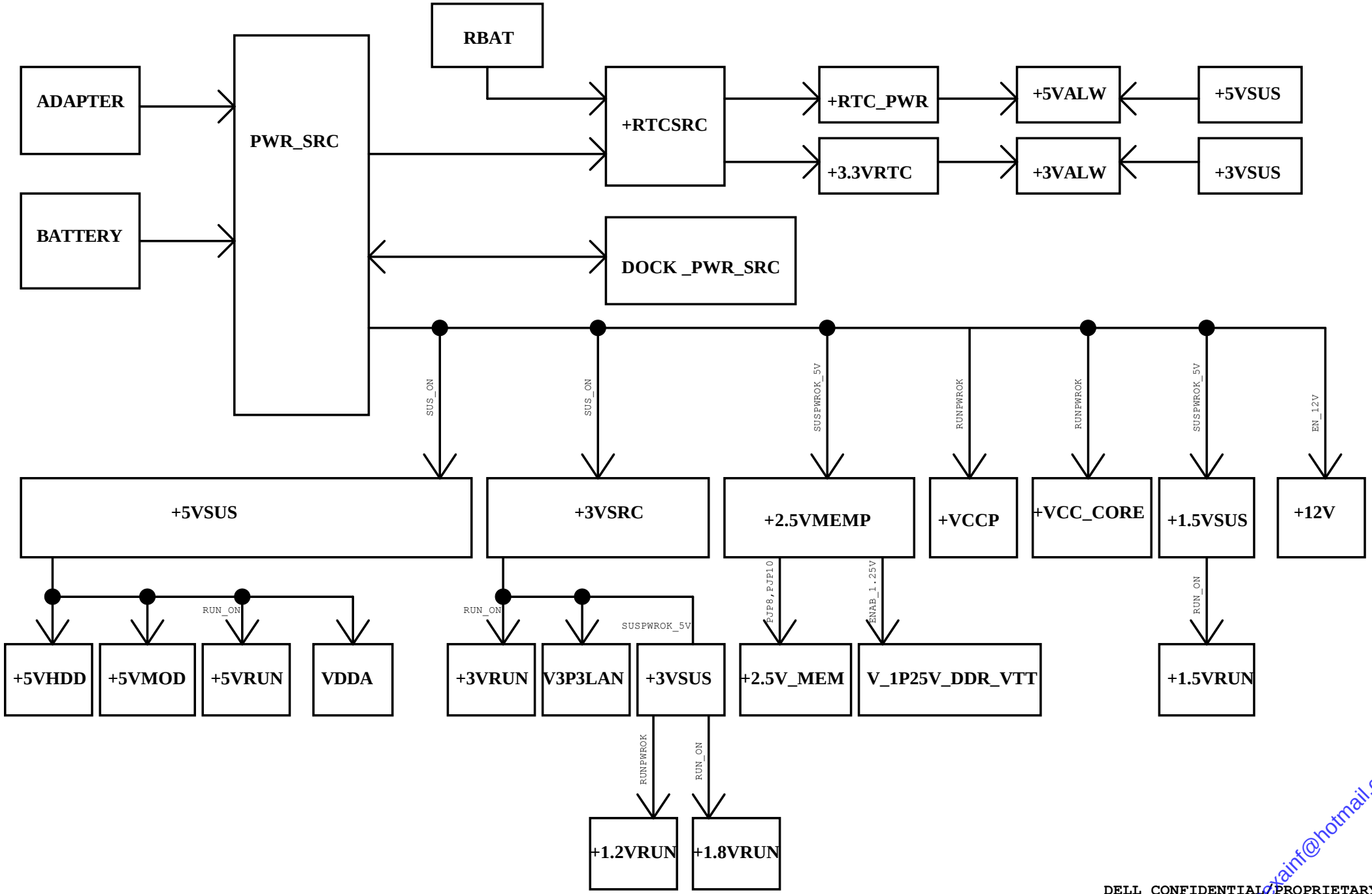

DELL CONFIDENTIAL/PROPRIETARY

Compal Electronics, Inc.

Title: Power Rail

Size | Document Number: BDQ11/LA-1601 | Rev 0.5

Date: 星期四, 二月 06, 2003 | Sheet 4 of 56

nexainf@hotmail.com

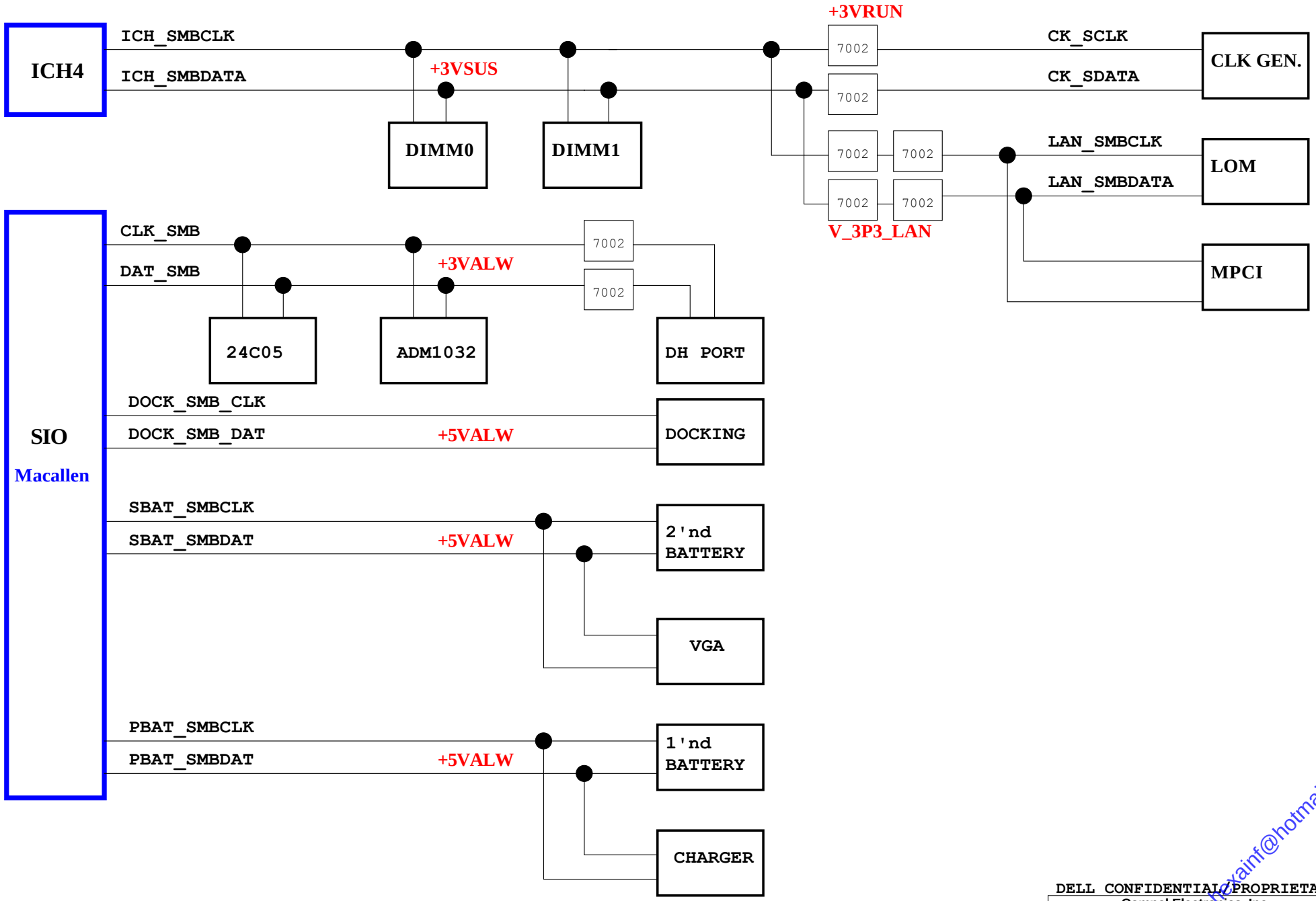

DELL CONFIDENTIAL/PROPRIETARY

Compal Electronics, Inc.

Title: SMBUS TOPOLOGY

Size | Document Number: BDQ11/LA-1601 | Rev 0.5

Date: 星期四, 二月 06, 2003 | Sheet 5 of 56

hexainf@hotmail.com

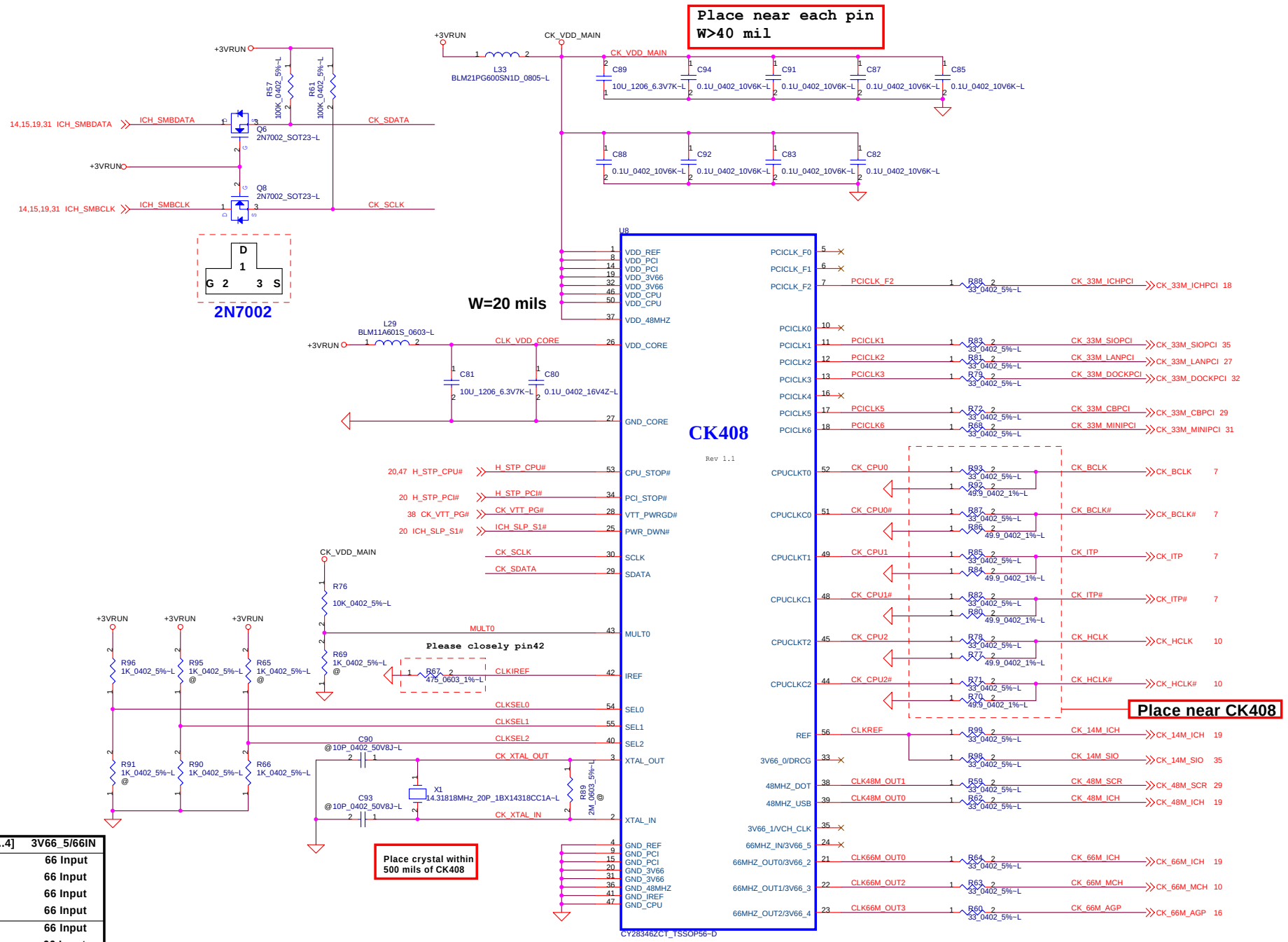

S2	S1	S0	CPU	3V66[0..4]	3V66_5/66IN
1	0	0	66	66IN	66 Input
1	0	1	100	66IN	66 Input
1	1	0	200	66IN	66 Input
1	1	1	133	66IN	66 Input
0	0	0	66	66	66 Input
0	0	1	100	66	66 Input
0	1	0	200	66	66 Input
0	1	1	133	66	66 Input
Mid	0	0	Hi-z	Hi-z	Hi-z
Mid	0	1	TCLK/2	TCLK/2	TCLK/2
Mid	1	0	Reserve	Reserve	Reserve
Mid	1	1	Reserve	Reserve	Reserve

DELL CONFIDENTIAL/PROPRIETARY

Compal Electronics, Inc.

Title: Clock Generator

Size | Document Number: BDQ11/LA-1601 | Rev 0.5

Date: 星期四, 二月 06, 2003 | Sheet 6 of 56

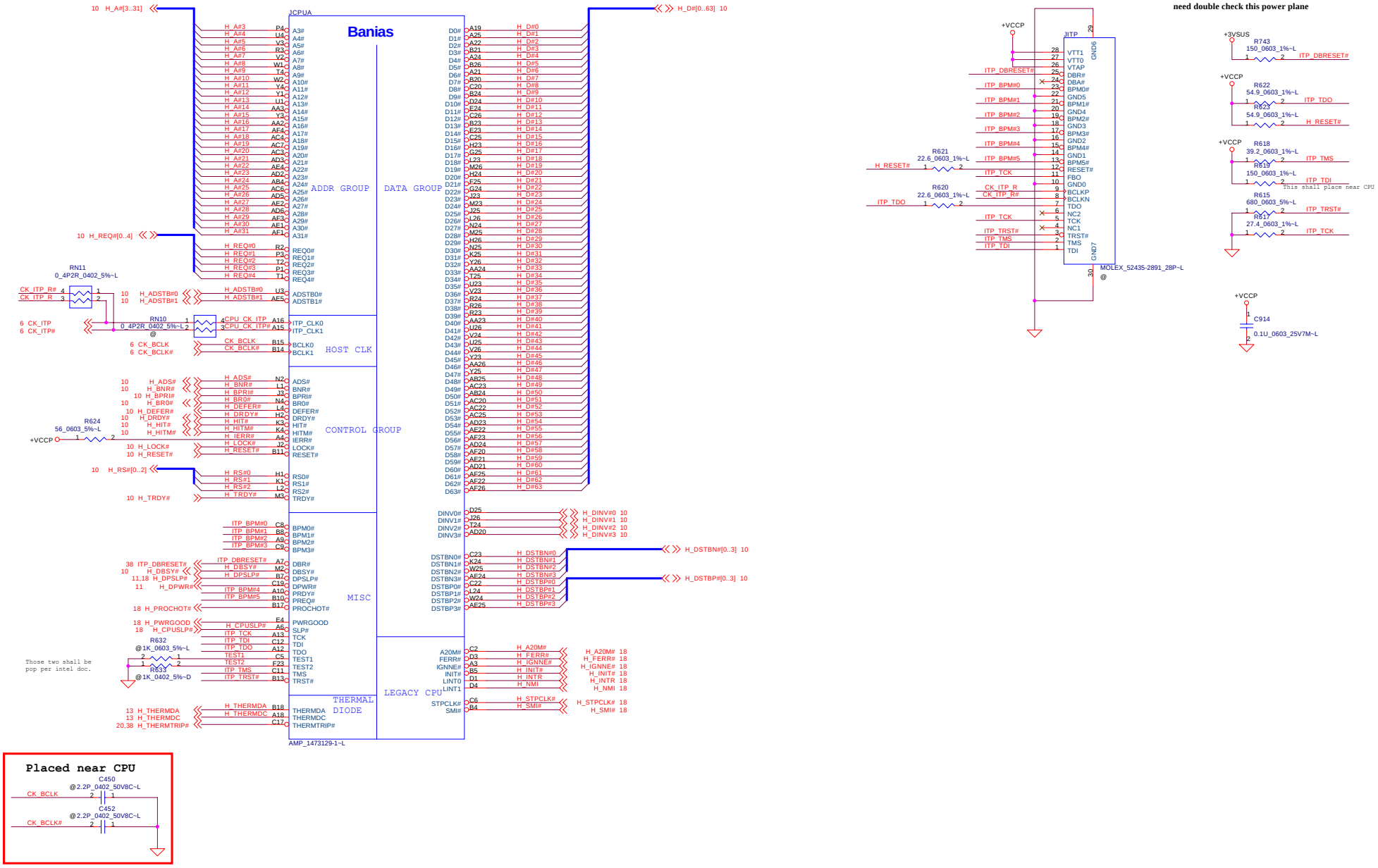

THIS SHEET OF ENGINEERING DRAWING IS THE PROPRIETARY PROPERTY OF COMPAL ELECTRONICS, INC. AND CONTAINS CONFIDENTIAL AND TRADE SECRET INFORMATION. THIS SHEET MAY NOT BE TRANSFERED FROM THE CUSTODY OF THE COMPETENT DIVISION OF R&D DEPARTMENT EXCEPT AS AUTHORIZED BY COMPAL ELECTRONICS, INC. NEITHER THIS SHEET NOR THE INFORMATION IT CONTAINS MAY BE USED BY OR DISCLOSED TO ANY THIRD PARTY WITHOUT PRIOR WRITTEN CONSENT OF COMPAL ELECTRONICS, INC.

DELL CONFIDENTIAL/PROPRIETARY

Compal Electronics, Inc.

Title	Banias Processor in mFCPGA479	
Size C	Document Number BDQ11/LA-1601	Rev 0.5
Date: 星期四, 二月 06, 2003	Sheet 7 of 56	

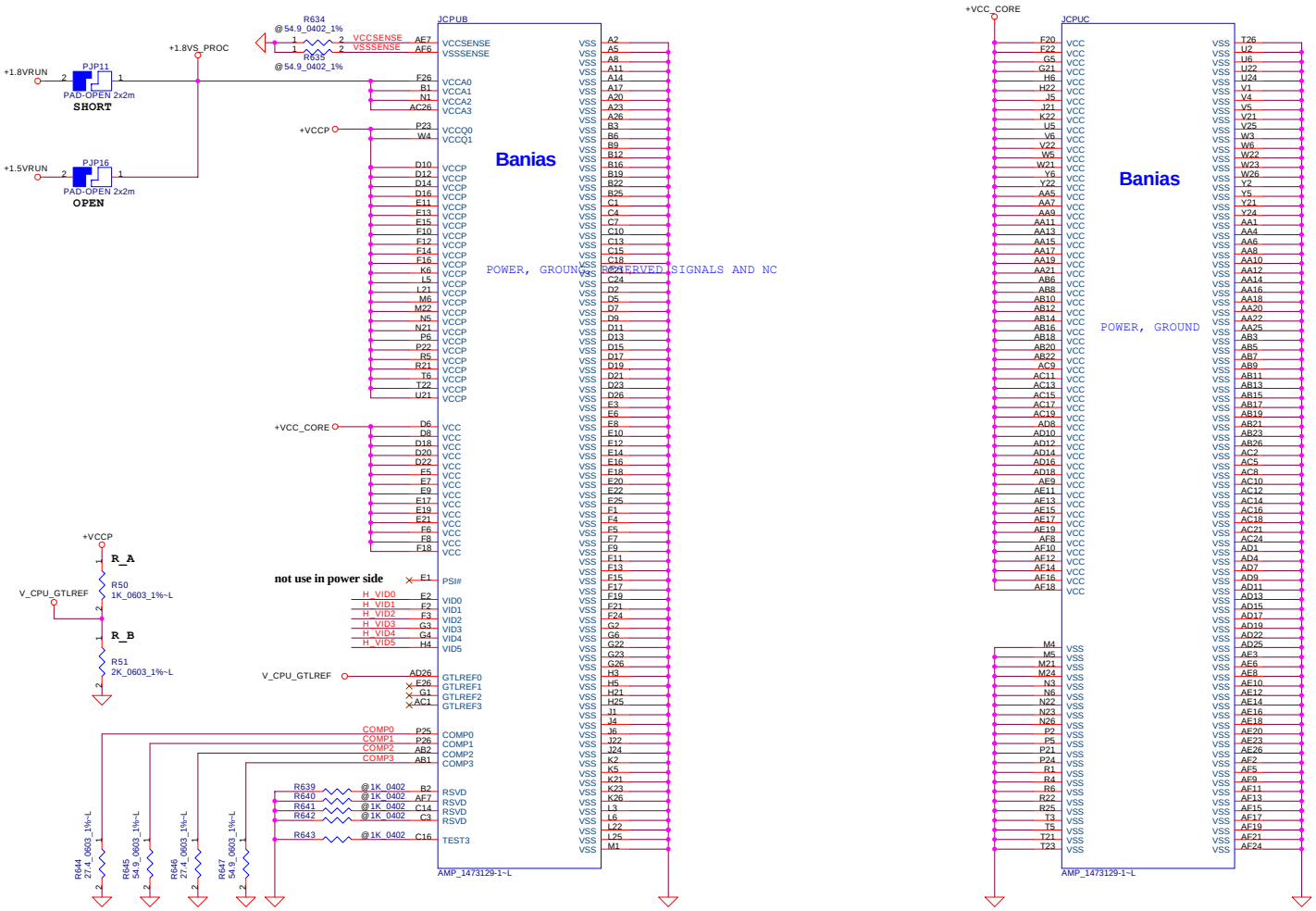

Resistor placed within 0.5" of CPU pin.Trace should be at least 25 miles away from any other toggling signal.

For test only ,Cmos output

CPU Voltage ID

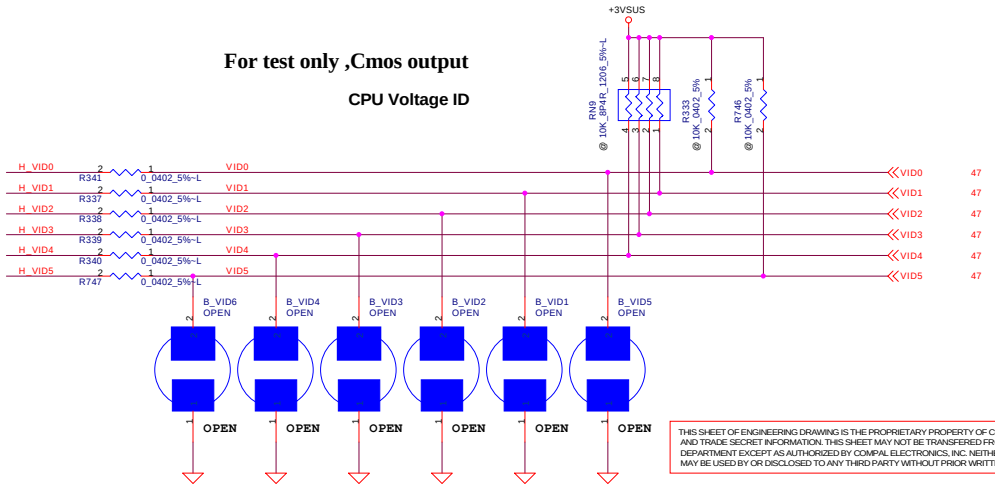

THIS SHEET OF ENGINEERING DRAWING IS THE PROPRIETARY PROPERTY OF COMPAL ELECTRONICS, INC. AND CONTAINS CONFIDENTIAL AND TRADE SECRET INFORMATION. THIS SHEET MAY NOT BE TRANSFERED FROM THE CUSTODY OF THE COMPETENT DIVISION OF R&D DEPARTMENT EXCEPT AS AUTHORIZED BY COMPAL ELECTRONICS, INC. NEITHER THIS SHEET NOR THE INFORMATION IT CONTAINS MAY BE USED BY OR DISCLOSED TO ANY THIRD PARTY WITHOUT PRIOR WRITTEN CONSENT OF COMPAL ELECTRONICS, INC.

DELL CONFIDENTIAL/PROPRIETARY

Compal Electronics, Inc.

Title	Banias Processor in mFCPGA479	
Size C	Document Number BDQ11/LA-1601	Rev 0.5
Date: 星期四, 二月 06, 2003	Sheet 8 of 56	

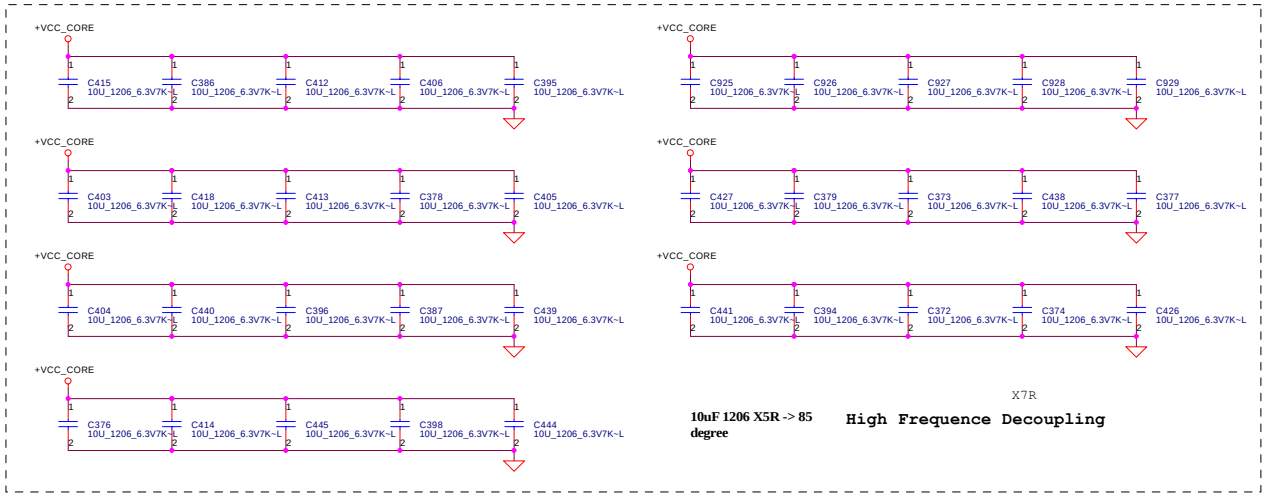

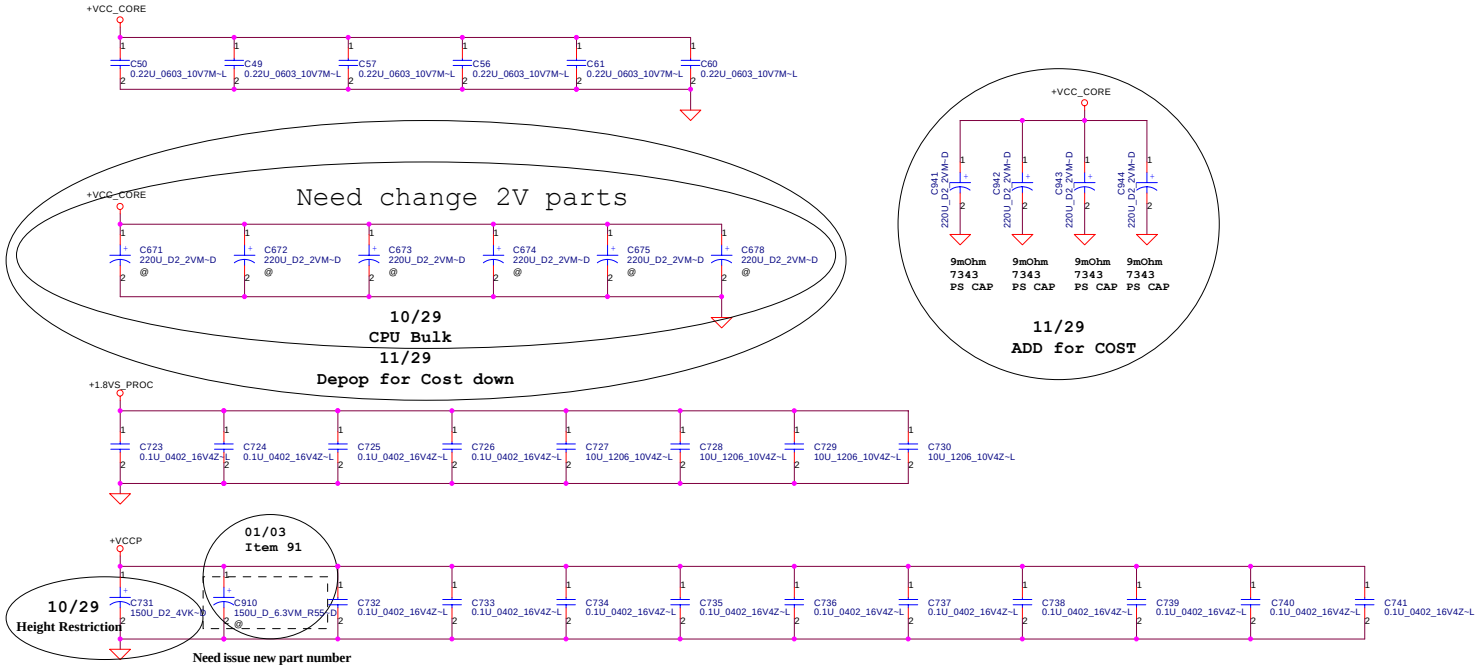

DELL CONFIDENTIAL/PROPRIETARY

Compal Electronics, Inc.

Title	CPU Bypass	
Size C	Document Number BDQ11/LA-1601	Rev 0.5
Date: 星期四, 二月 06, 2003	Sheet 9 of 56	

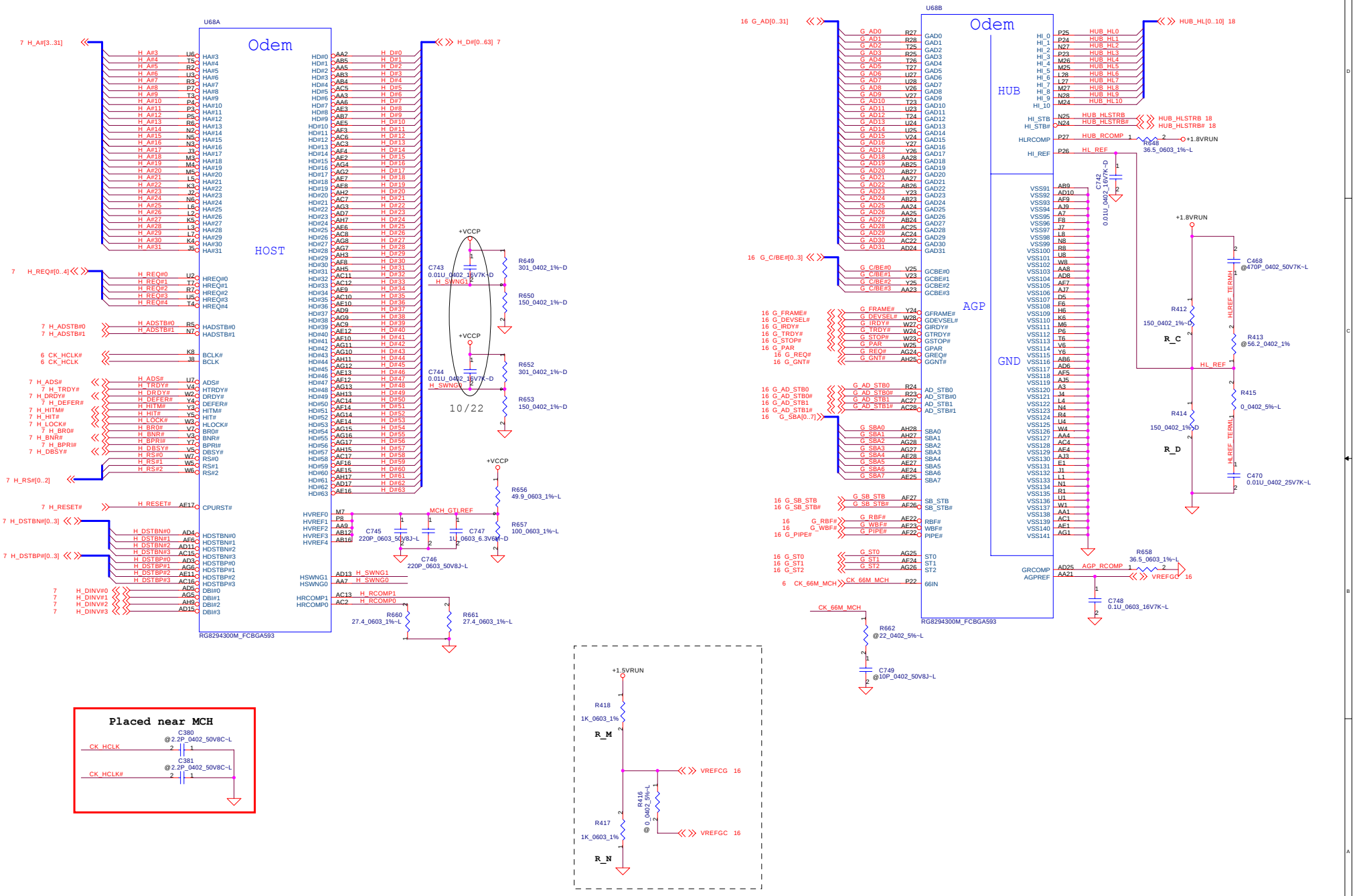
U68A
Odem
HOST
RG8294300M_FCBGA593
U68B
Odem
HUB
AGP
GND
RG8294300M_FCBGA593
Placed near MCH
C380 @2.2P_0402_50V8C~L
C381 @2.2P_0402_50V8C~L
CK_HCLK
CK_HCLK#
+1.5VRUN
R418 1K_0603_1%
R_M
R417 1K_0603_1%
R_N
R416 @0_0402_5%~L
VREFCG 16
VREFGC 16
Compal Electronics, Inc.
DELL CONFIDENTIAL/PROPRIETARY
Compal Electronics, Inc.
Title
Odem(1 of 3)
Size C
Document Number
BDQ11/LA-1601
Rev 0.5
Date: 星期四, 二月 06, 2003
Sheet 10 of 56

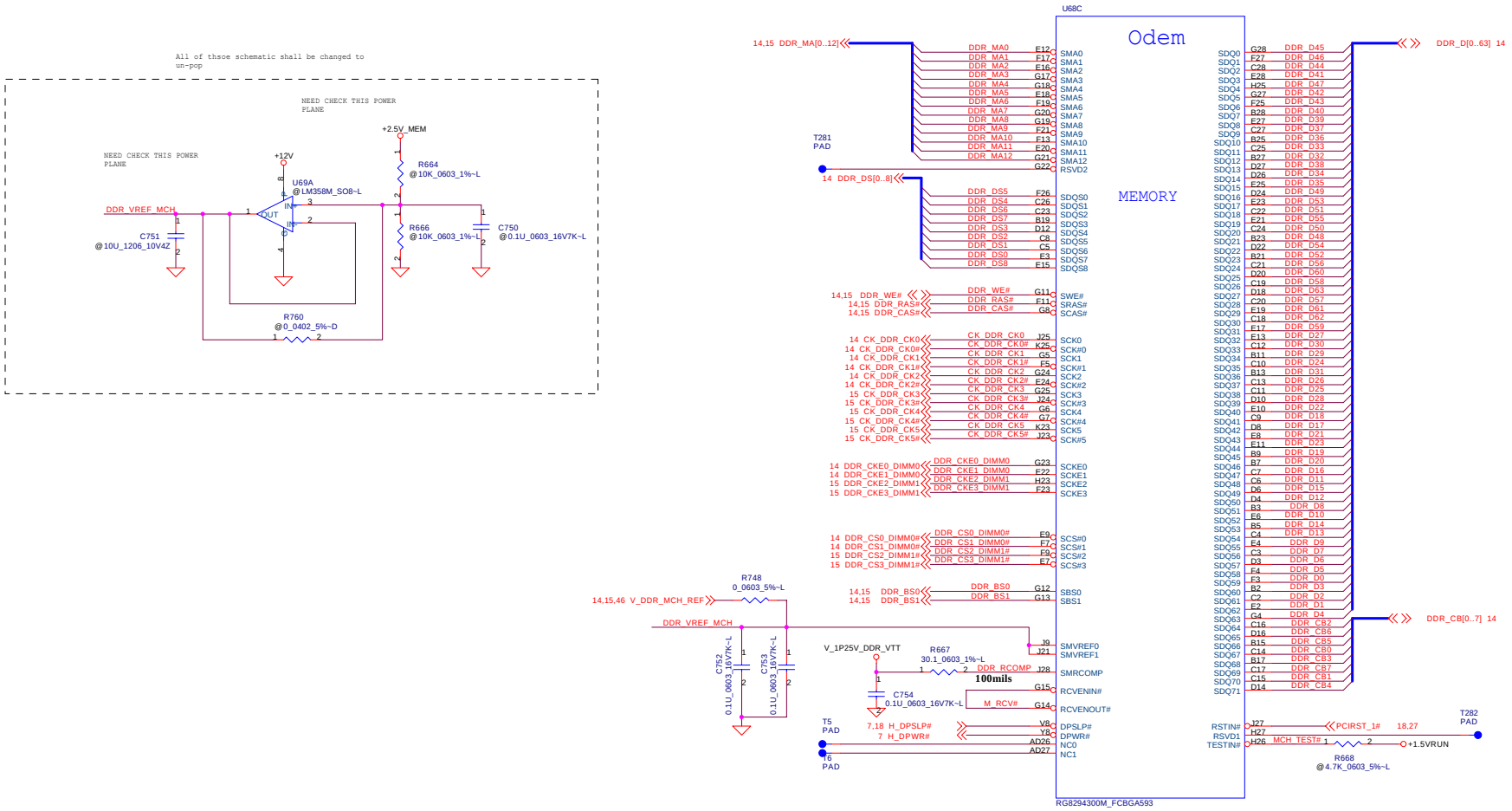

THIS SHEET OF ENGINEERING DRAWING IS THE PROPRIETARY PROPERTY OF COMPAL ELECTRONICS, INC. AND CONTAINS CONFIDENTIAL AND TRADE SECRET INFORMATION. THIS SHEET MAY NOT BE TRANSFERED FROM THE CUSTODY OF THE COMPETENT DIVISION OF R&D DEPARTMENT EXCEPT AS AUTHORIZED BY COMPAL ELECTRONICS, INC. NEITHER THIS SHEET NOR THE INFORMATION IT CONTAINS MAY BE USED BY OR DISCLOSED TO ANY THIRD PARTY WITHOUT PRIOR WRITTEN CONSENT OF COMPAL ELECTRONICS, INC.

DELL CONFIDENTIAL/PROPRIETARY

Compal Electronics, Inc.

Title	Odem(2 of 3)	
Size C	Document Number BDQ11/LA-1601	Rev 0.5
Date: 星期四, 二月 06, 2003	Sheet 11 of 56	

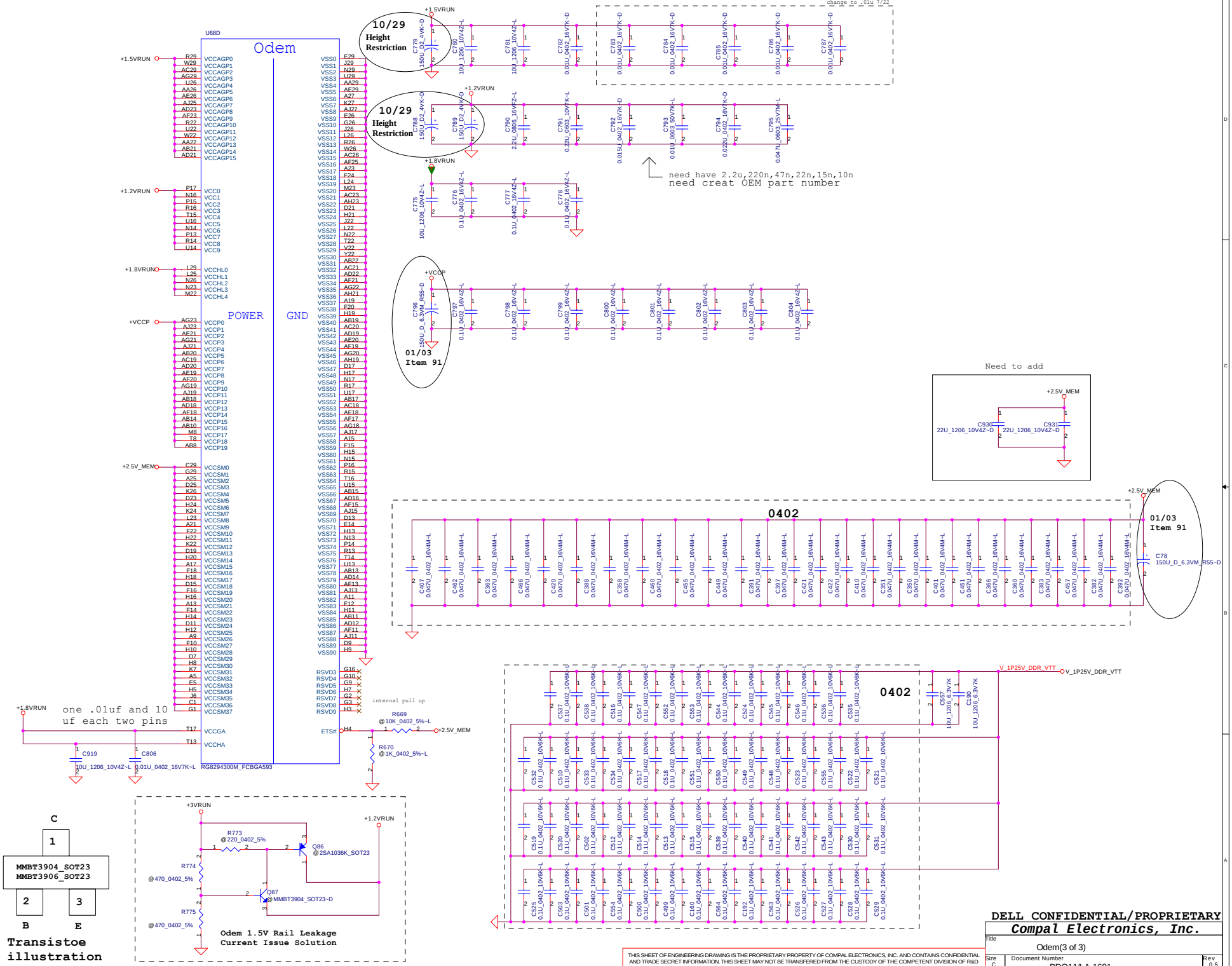

DELL CONFIDENTIAL/PROPRIETARY

Compal Electronics, Inc.

Title: Odem(3 of 3)

Size: C | Document Number: BDQ11/LA-1601 | Rev: 0.5

Date: 星期四, 二月 06, 2003 | Sheet 12 of 56

THIS SHEET OF ENGINEERING DRAWING IS THE PROPRIETARY PROPERTY OF COMPAL ELECTRONICS, INC. AND CONTAINS CONFIDENTIAL AND TRADE SECRET INFORMATION. THIS SHEET MAY NOT BE TRANSFERED FROM THE CUSTODY OF THE COMPETENT DIVISION OF R&D DEPARTMENT EXCEPT AS AUTHORIZED BY COMPAL ELECTRONICS, INC. NEITHER THIS SHEET NOR THE INFORMATION IT CONTAINS MAY BE USED BY OR DISCLOSED TO ANY THIRD PARTY WITHOUT PRIOR WRITTEN CONSENT OF COMPAL ELECTRONICS, INC.

FAN1 Control and Tachometer

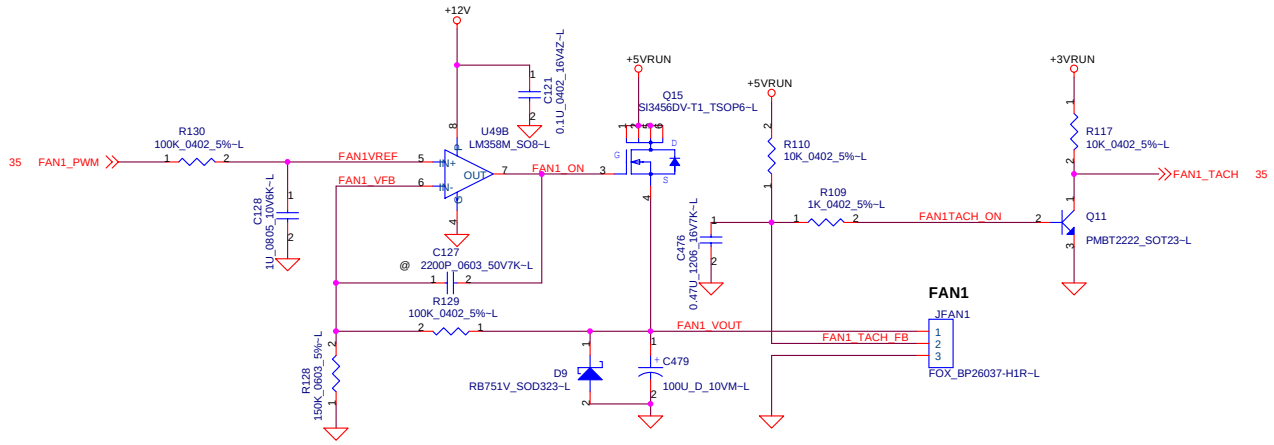

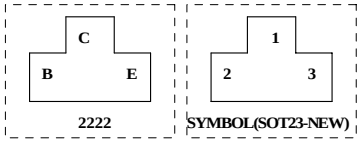

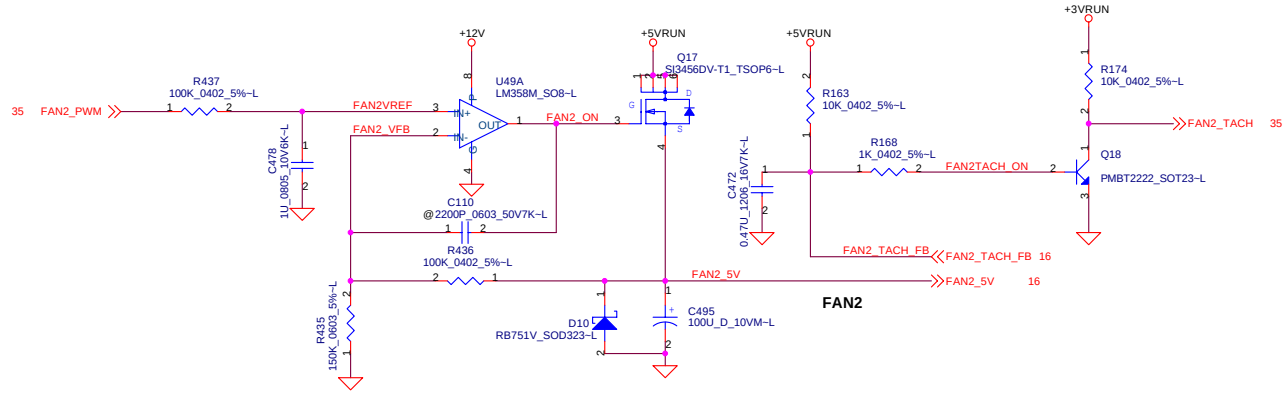

CPU Temperature Sensor

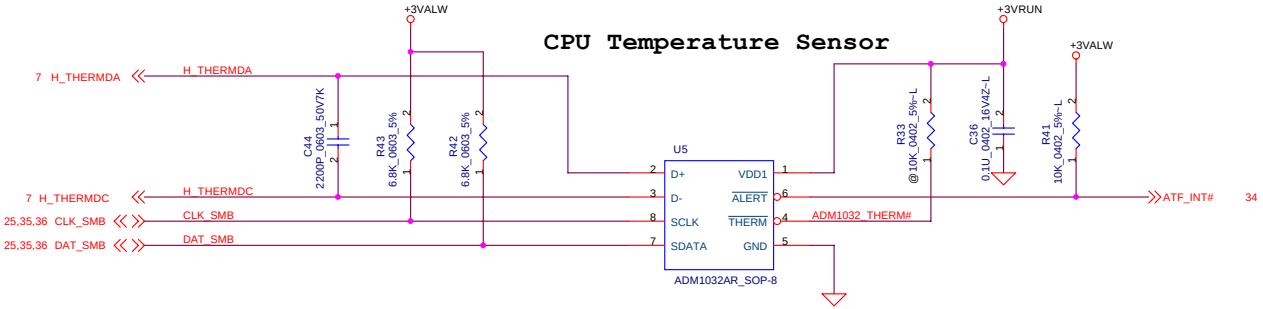

DELL CONFIDENTIAL/PROPRIETARY

Compal Electronics, Inc.

Title	ITP Debug CONN. & FAN	
Size	Document Number BDQ11/LA-1601	Rev 0.5
Date: 星期四, 二月 06, 2003	Sheet 13 of 56	

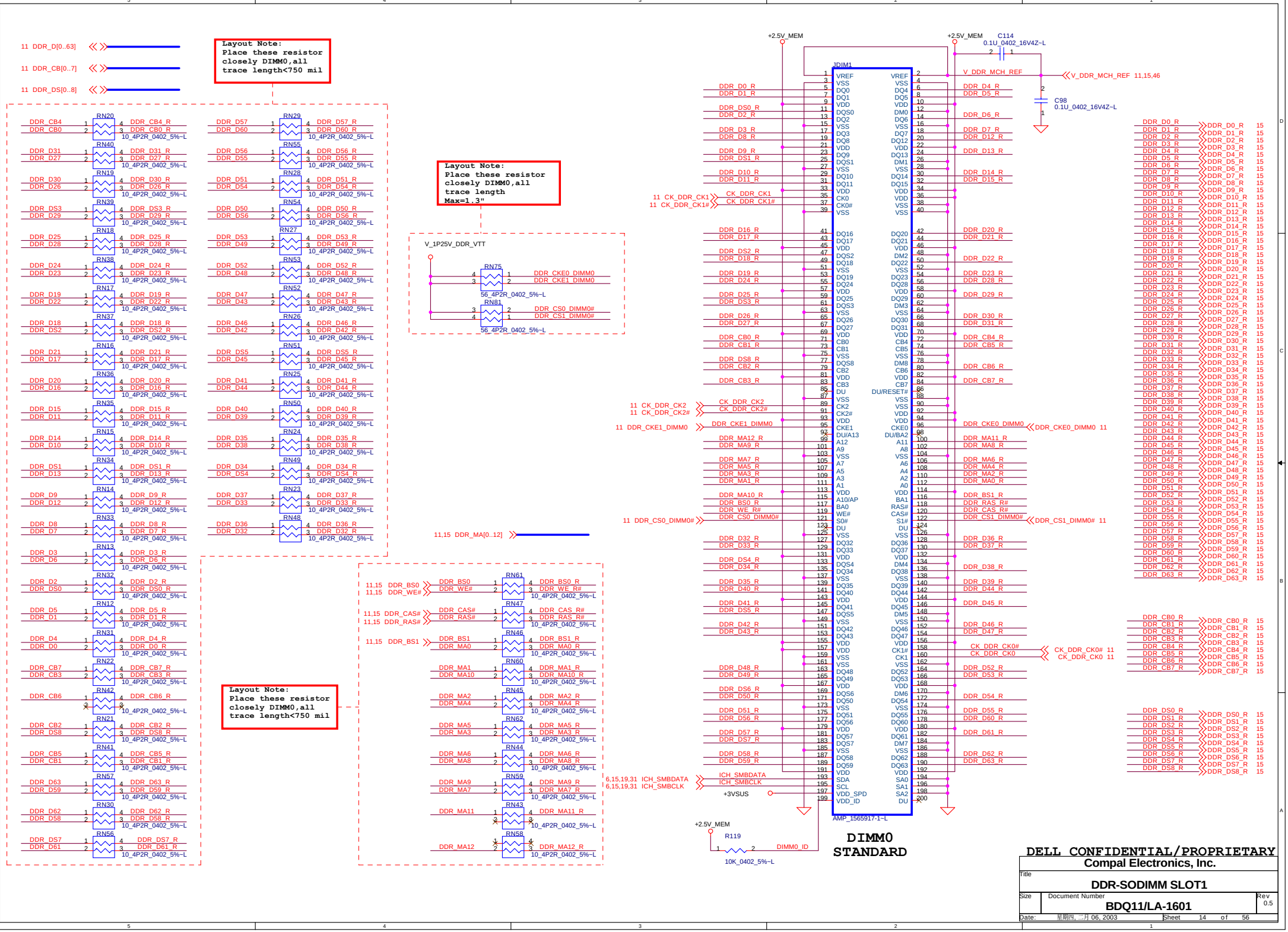
11 DDR_D[0..63]
11 DDR_CB[0..7]
11 DDR_DS[0..8]
Layout Note: Place these resistor closely DIMM0,all trace length<750 mil
Layout Note: Place these resistor closely DIMM0,all trace length Max=1.3"
Layout Note: Place these resistor closely DIMM0,all trace length<750 mil
V_1P25V_DDR_VTT
RN75
DDR_CKE0_DIMM0
DDR_CKE1_DIMM0
56_4P2R_0402_5%~L
RN81
DDR_CS0_DIMM0#
DDR_CS1_DIMM0#
11,15 DDR_MA[0..12]
11,15 DDR_BS0
11,15 DDR_WE#
11,15 DDR_CAS#
11,15 DDR_RAS#
11,15 DDR_BS1
10_4P2R_0402_5%~L
+2.5V_MEM
C114
0.1U_0402_16V4Z~L
V_DDR_MCH_REF
V_DDR_MCH_REF 11,15,46
C98
0.1U_0402_16V4Z~L
JDIM1
11 CK_DDR_CK1
11 CK_DDR_CK1#
11 CK_DDR_CK2
11 CK_DDR_CK2#
11 DDR_CKE1_DIMM0
DDR_CKE0_DIMM0
DDR_CKE0_DIMM0 11
11 DDR_CS0_DIMM0#
DDR_CS1_DIMM0#
DDR_CS1_DIMM0# 11
CK_DDR_CK0#
CK_DDR_CK0
CK_DDR_CK0# 11
CK_DDR_CK0 11
6,15,19,31 ICH_SMBDATA
6,15,19,31 ICH_SMBCLK
ICH_SMBDATA
ICH_SMBCLK
+3VSUS
R119
10K_0402_5%~L
DIMM0_ID
AMP_1565917-1~L
DIMM0
STANDARD
DELL CONFIDENTIAL/PROPRIETARY
Compal Electronics, Inc.
Title
DDR-SODIMM SLOT1
Size
Document Number
BDQ11/LA-1601
Rev
0.5
Date: 星期四, 二月 06, 2003
Sheet 14 of 56

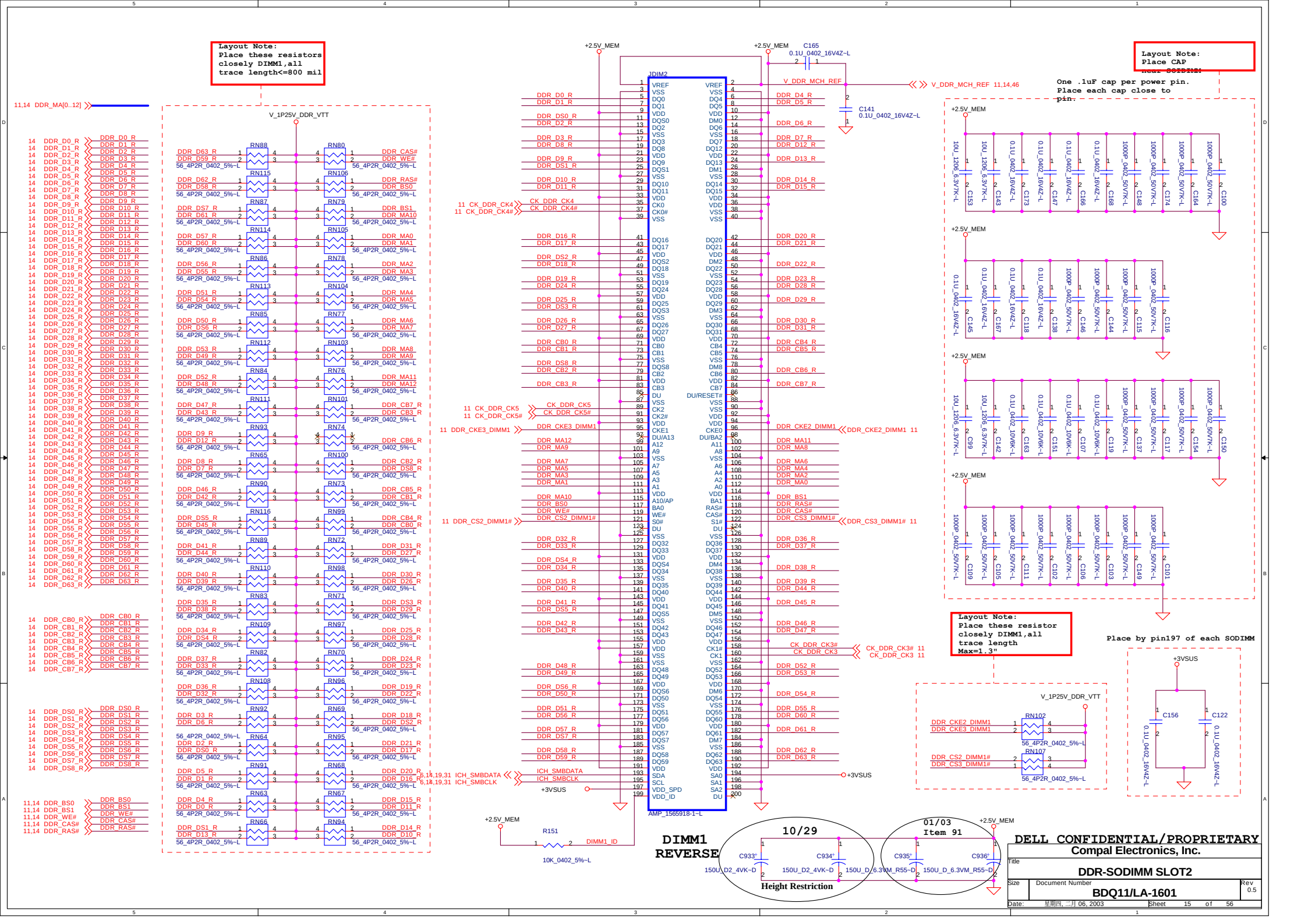
Layout Note:
Place these resistors closely DIMM1,all trace length<=800 mil
Layout Note:
Place CAP near SODIMM
One .1uF cap per power pin.
Place each cap close to pin.
Layout Note:
Place these resistor closely DIMM1,all trace length Max=1.3"
Place by pin197 of each SODIMM
JDIM2
AMP_1565918-1-L
V_1P25V_DDR_VTT
+2.5V_MEM
+3VSUS
V_DDR_MCH_REF 11,14,46
11,14 DDR_MA[0..12]
11 CK_DDR_CK4
11 CK_DDR_CK4#
11 CK_DDR_CK5
11 CK_DDR_CK5#
11 DDR_CKE3_DIMM1
11 DDR_CS2_DIMM1#
DDR_CKE2_DIMM1 11
DDR_CS3_DIMM1# 11
CK_DDR_CK3# 11
CK_DDR_CK3 11
6,14,19,31 ICH_SMBDATA
6,14,19,31 ICH_SMBCLK
DIMM1_ID
R151
10K_0402_5%-L
DIMM1 REVERSE
10/29
01/03 Item 91
Height Restriction
DELL CONFIDENTIAL/PROPRIETARY
Compal Electronics, Inc.
Title
DDR-SODIMM SLOT2
Size
Document Number
BDQ11/LA-1601
Rev 0.5
Date: 星期四, 二月 06, 2003
Sheet 15 of 56

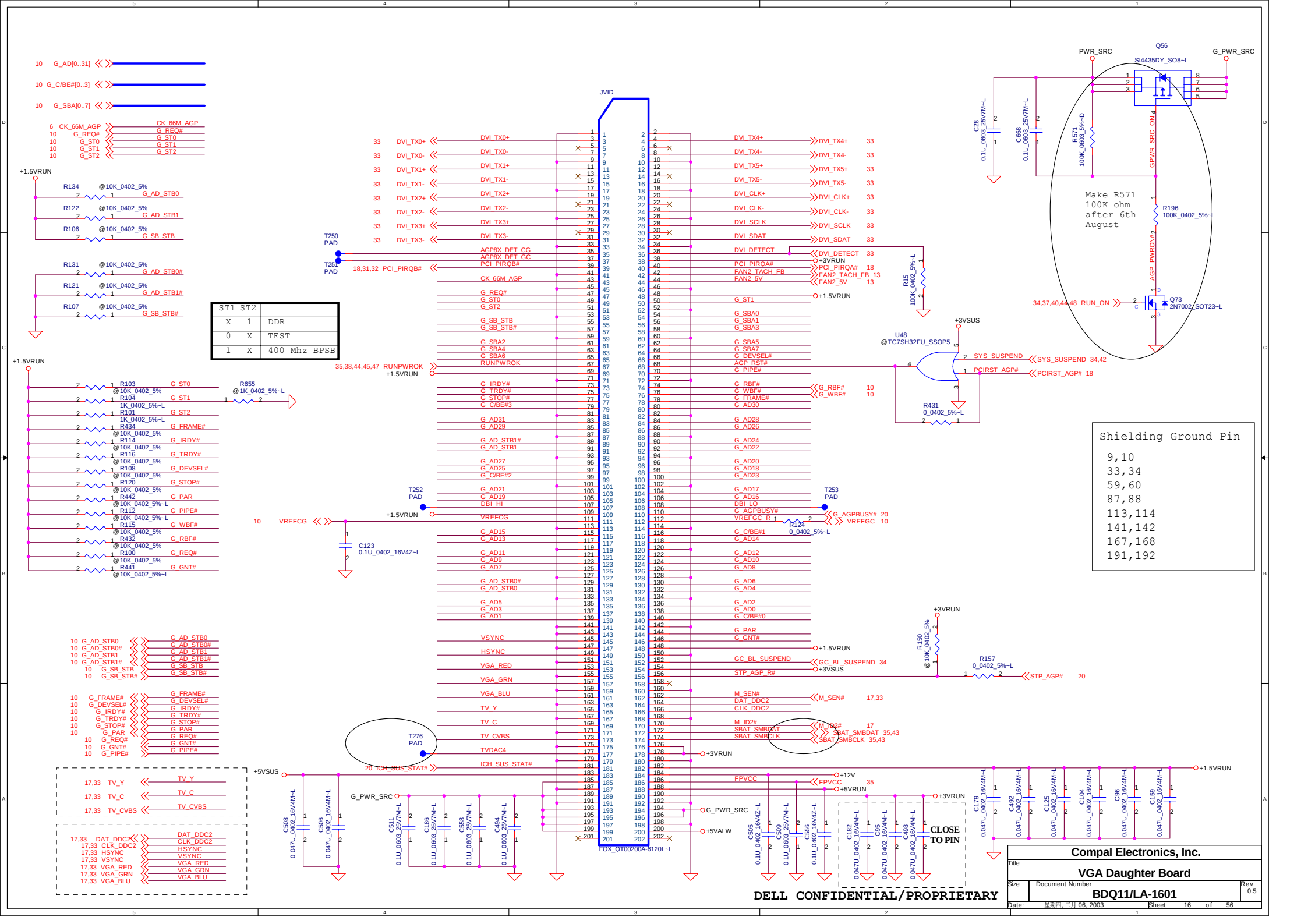
JVID
FOX_QT00200A-6120L-L
Q56
SI4435DY_SO8-L
PWR_SRC
G_PWR_SRC
Make R571 100K ohm after 6th August
Q73 2N7002_SOT23-L
U48 @TC7SH32FU_SSOP5
Shielding Ground Pin
9,10
33,34
59,60
87,88
113,114
141,142
167,168
191,192
CLOSE TO PIN
DELL CONFIDENTIAL/PROPRIETARY
Compal Electronics, Inc.
VGA Daughter Board
BDQ11/LA-1601
Rev 0.5
Sheet 16 of 56

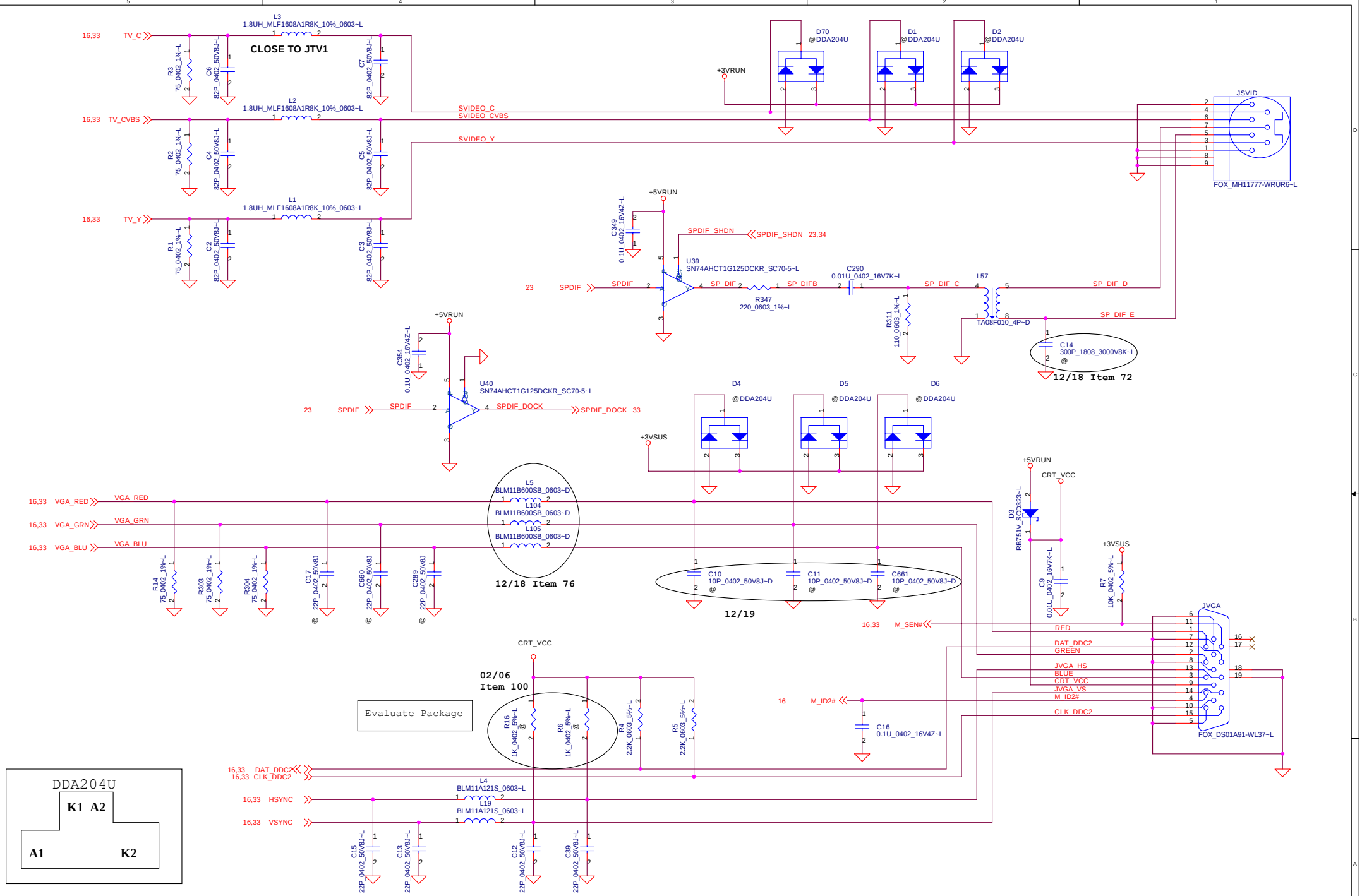

DELL CONFIDENTIAL/PROPRIETARY

Compal Electronics, Inc.

Title	**TV_OUT and CRT**	
Size	Document Number **BDQ11/LA-1601**	Rev 0.5
Date: 星期四, 二月 06, 2003	Sheet 17 of 56	

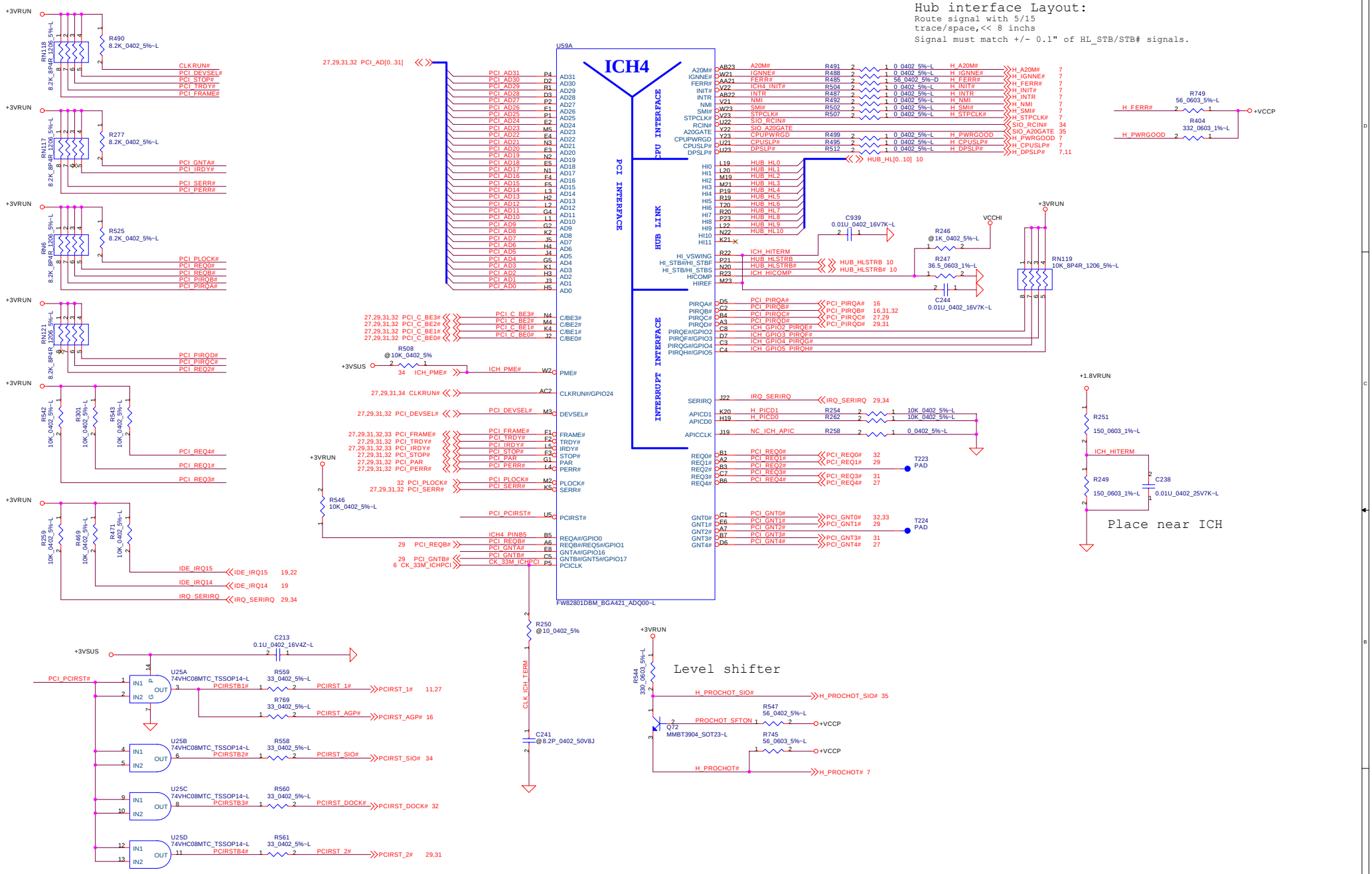
Hub interface Layout:
Route signal with 5/15
trace/space,<< 8 inchs
Signal must match +/- 0.1" of HL_STB/STB# signals.
ICH4
U59A
FW82801DBM_BGA421_ADQ00~L
PCI INTERFACE
CPU INTERFACE
HUB LINK
INTERRUPT INTERFACE
Place near ICH
Level shifter
DELL CONFIDENTIAL/PROPRIETARY
Compal Electronics, Inc.
ICH4(1/4)
BDQ11/LA-1601
Rev 0.5
Sheet 18 of 56

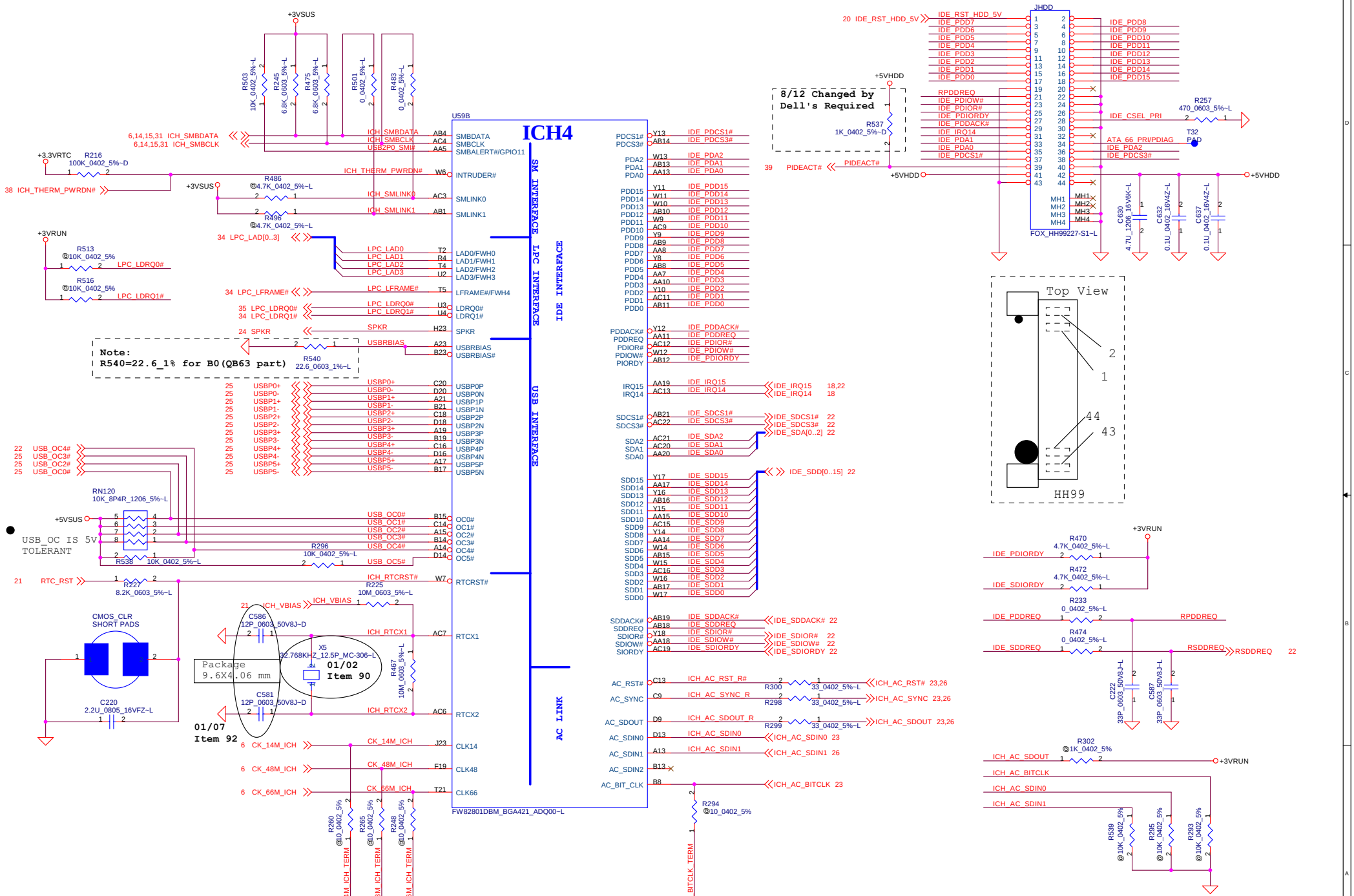
ICH4
U59B
FW82801DBM_BGA421_ADQ00-L
SM INTERFACE
LPC INTERFACE
IDE INTERFACE
USB INTERFACE
AC LINK
JHDD
FOX_HH99227-S1-L
8/12 Changed by Dell's Required
Top View
HH99
USB_OC IS 5V TOLERANT
CMOS_CLR SHORT PADS
Package 9.6X4.06 mm
01/02 Item 90
01/07 Item 92
Note: R540=22.6_1% for B0(QB63 part)
DELL CONFIDENTIAL/PROPRIETARY
Compal Electronics, Inc.
Title
ICH4(2/4)
Size
Document Number
BDQ11/LA-1601
Rev 0.5
Date: 星期四, 二月 06, 2003
Sheet 19 of 56

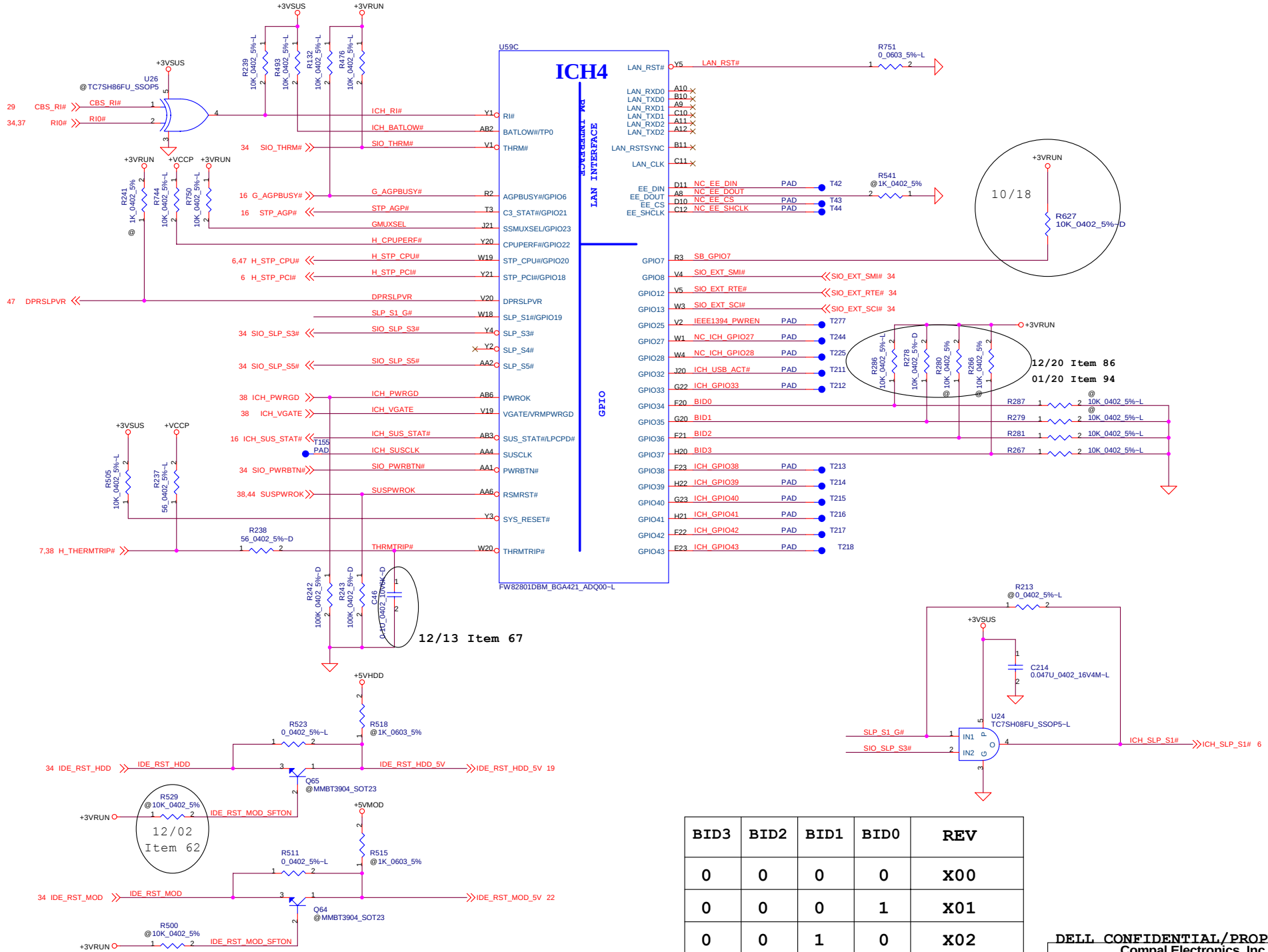

BID3	BID2	BID1	BID0	REV
0	0	0	0	X00
0	0	0	1	X01
0	0	1	0	X02
0	0	1	1	X03

DELL CONFIDENTIAL/PROPRIETARY

Compal Electronics, Inc.

Title: ICH4(3/4)

Size | Document Number: BDQ11/LA-1601 | Rev: 0.5

Date: 星期四, 二月 06, 2003 | Sheet 20 of 56

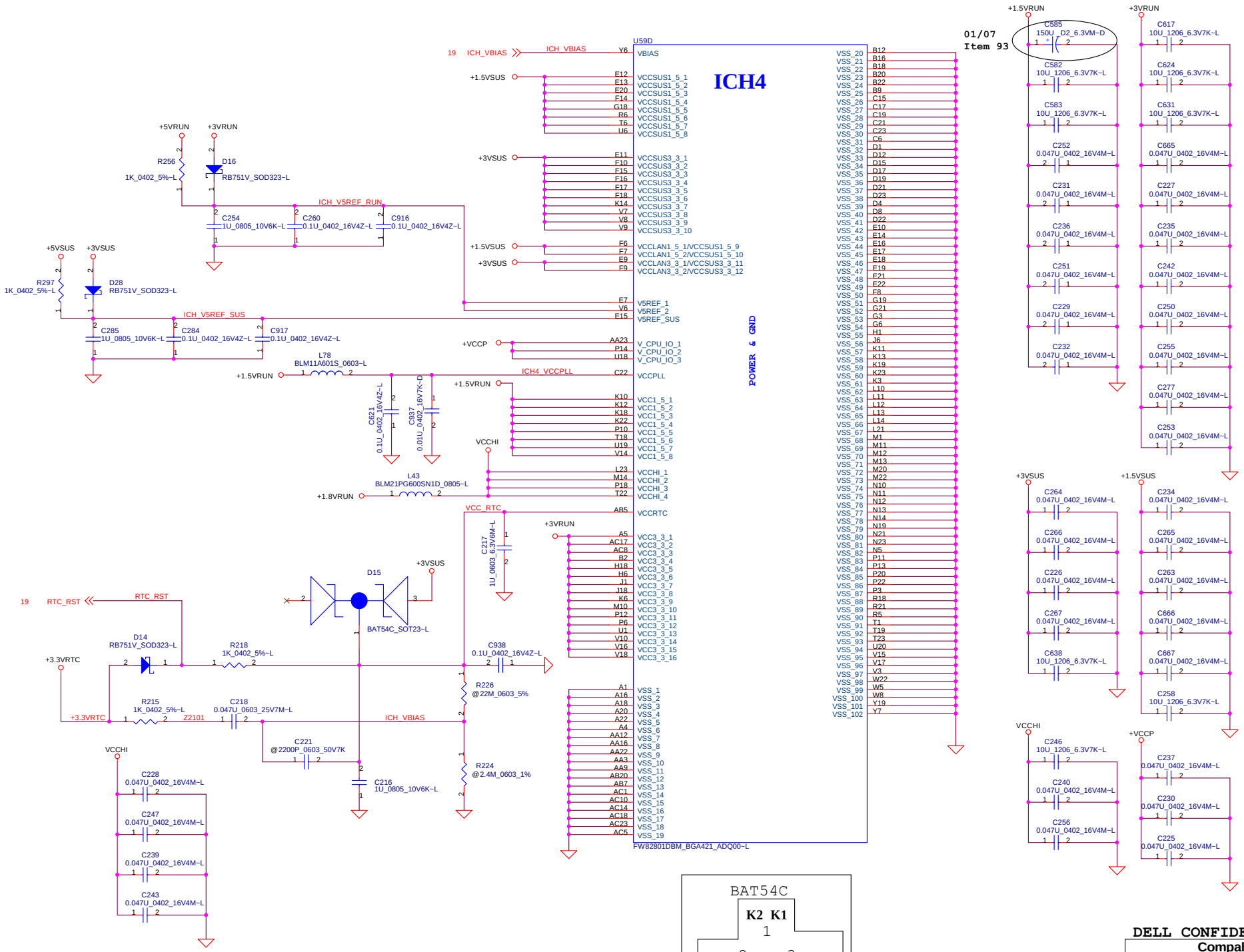

DELL CONFIDENTIAL/PROPRIETARY

Compal Electronics, Inc.

Title	ICH4(4/4)	
Size	Document Number BDQ11/LA-1601	Rev 0.5
Date: 星期四, 二月 06, 2003	Sheet 21 of 56	

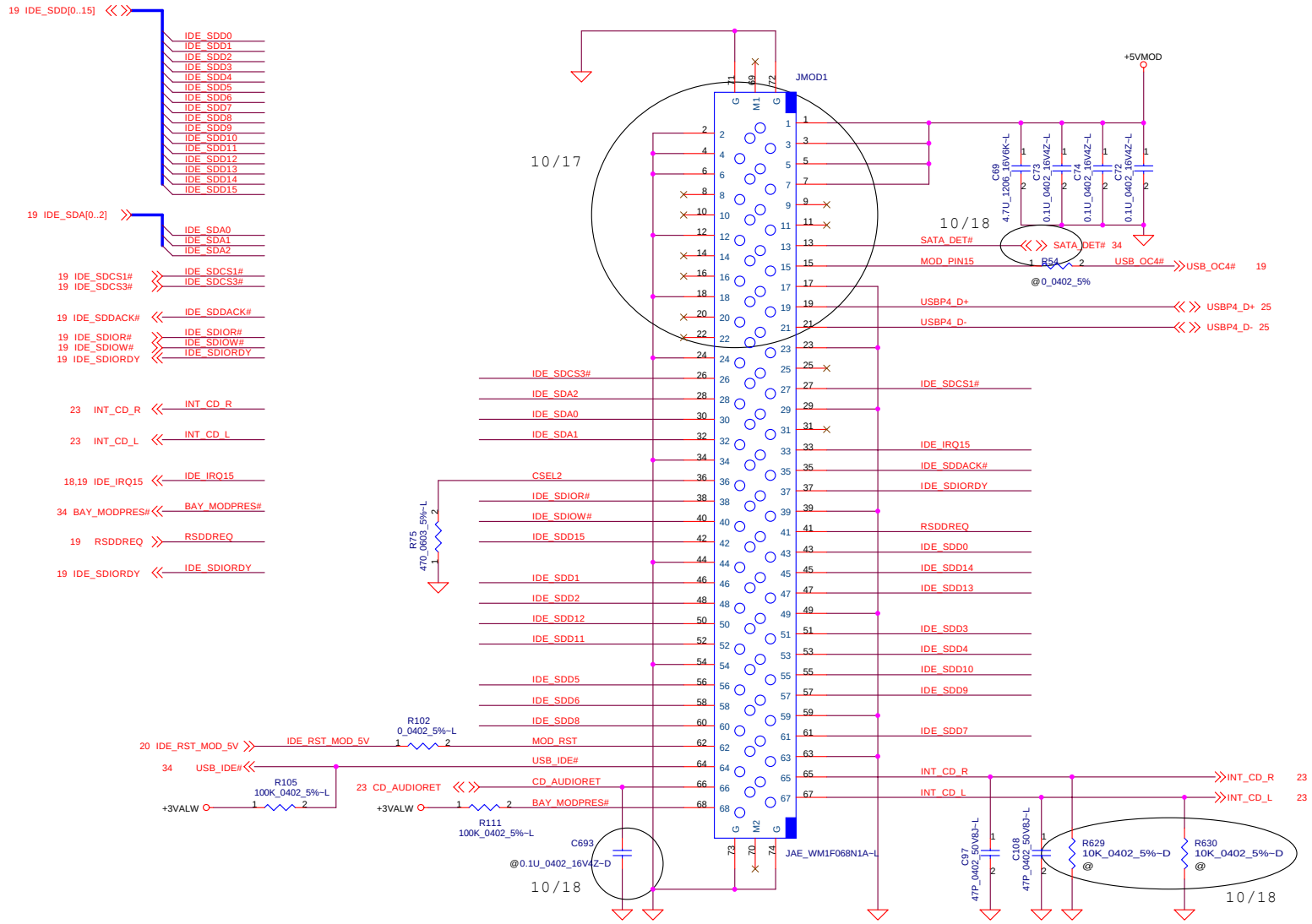

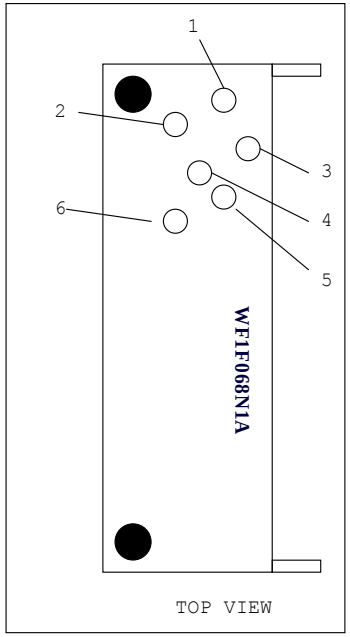

DELL CONFIDENTIAL/PROPRIETARY

Compal Electronics, Inc.

Title	**DVD MODULE**	
Size	Document Number **BDQ11/LA-1601**	Rev 0.5
Date: 星期四, 二月 06, 2003	Sheet 22 of 56	

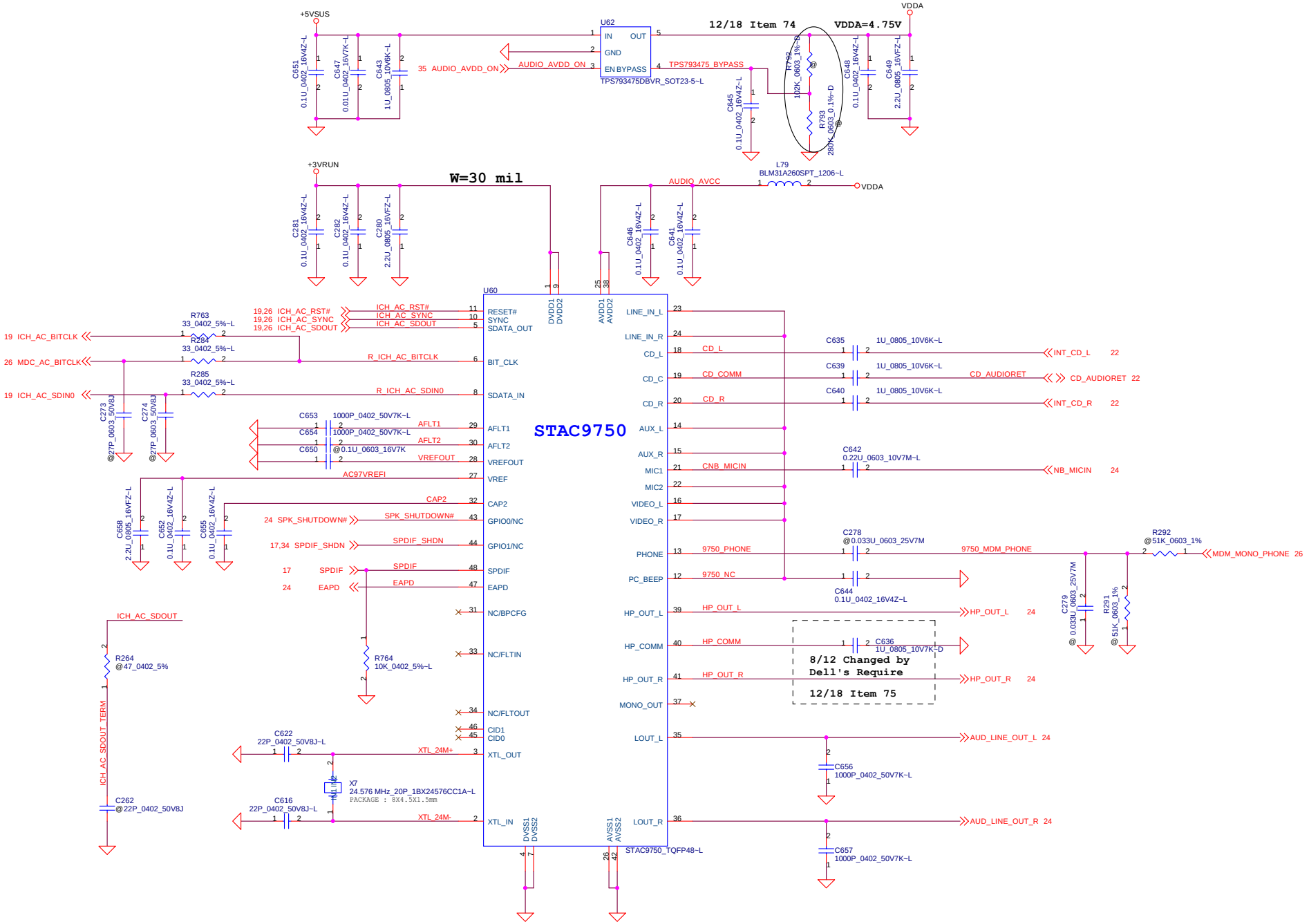

DELL CONFIDENTIAL/PROPRIETARY

Compal Electronics, Inc.

Title	**AC97**	
Size	Document Number **BDQ11/LA-1601**	Rev 0.5
Date: 星期四, 二月 06, 2003	Sheet 23 of 56	

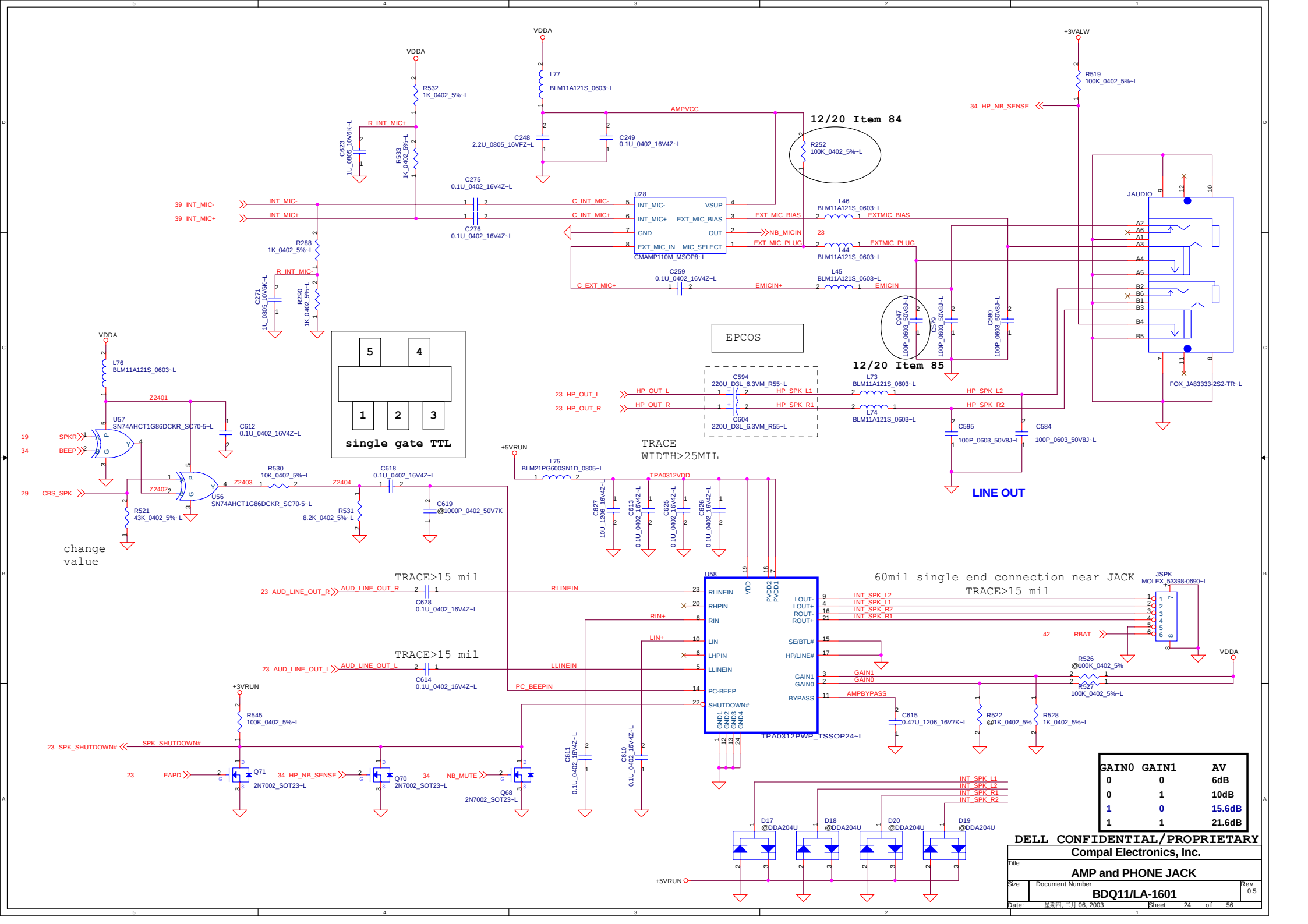

GAIN0	GAIN1	AV
0	0	6dB
0	1	10dB
1	0	15.6dB
1	1	21.6dB

DELL CONFIDENTIAL/PROPRIETARY

Compal Electronics, Inc.

Title: AMP and PHONE JACK

Size | Document Number: BDQ11/LA-1601 | Rev 0.5

Date: 星期四, 二月 06, 2003 | Sheet 24 of 56

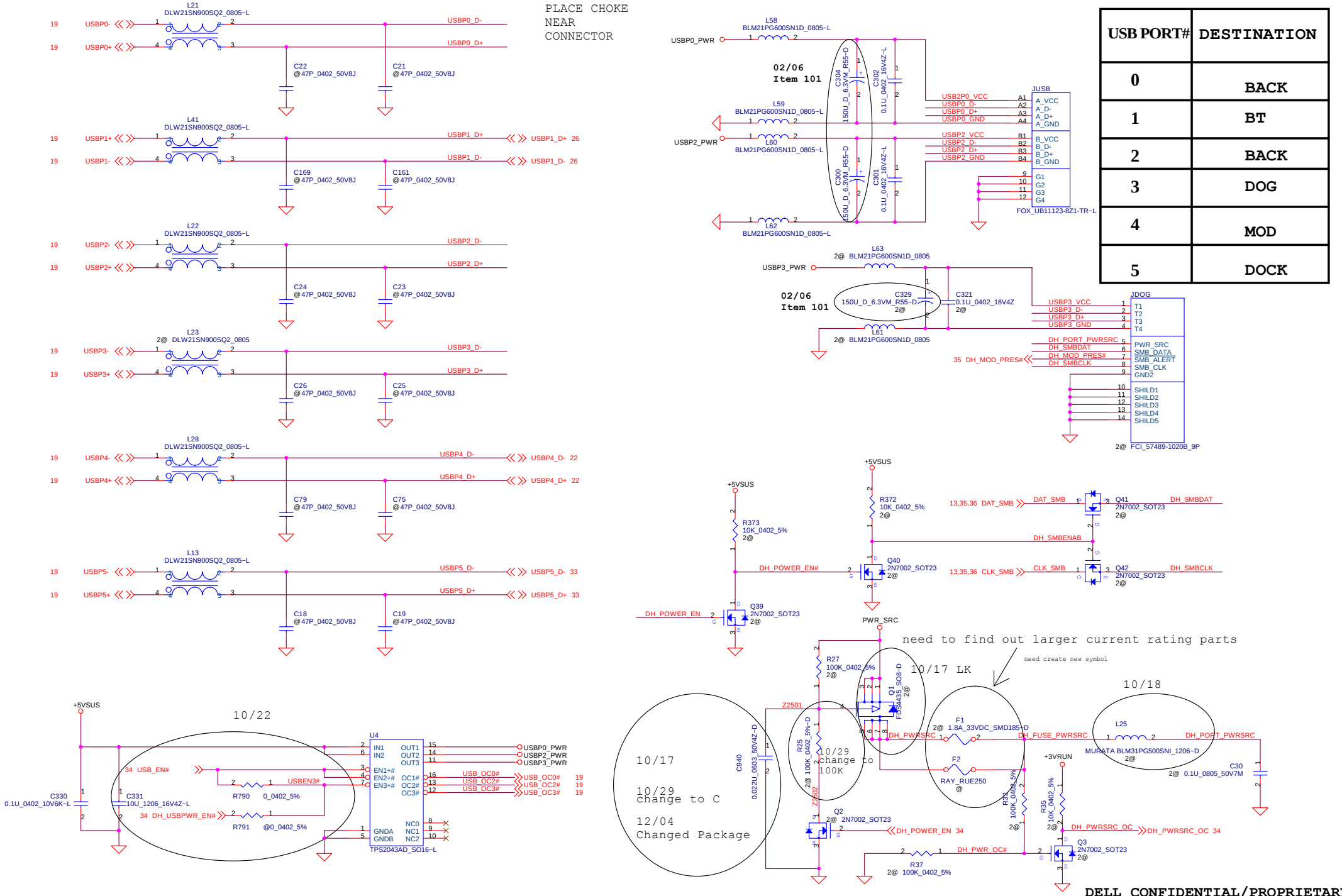

USB PORT#	DESTINATION
0	BACK
1	BT
2	BACK
3	DOG
4	MOD
5	DOCK

DELL CONFIDENTIAL/PROPRIETARY

Compal Electronics, Inc.

Title: USB 2.0

Size | Document Number: BDQ11/LA-1601 | Rev 0.5

Date: 星期四, 二月 06, 2003 | Sheet 25 of 56

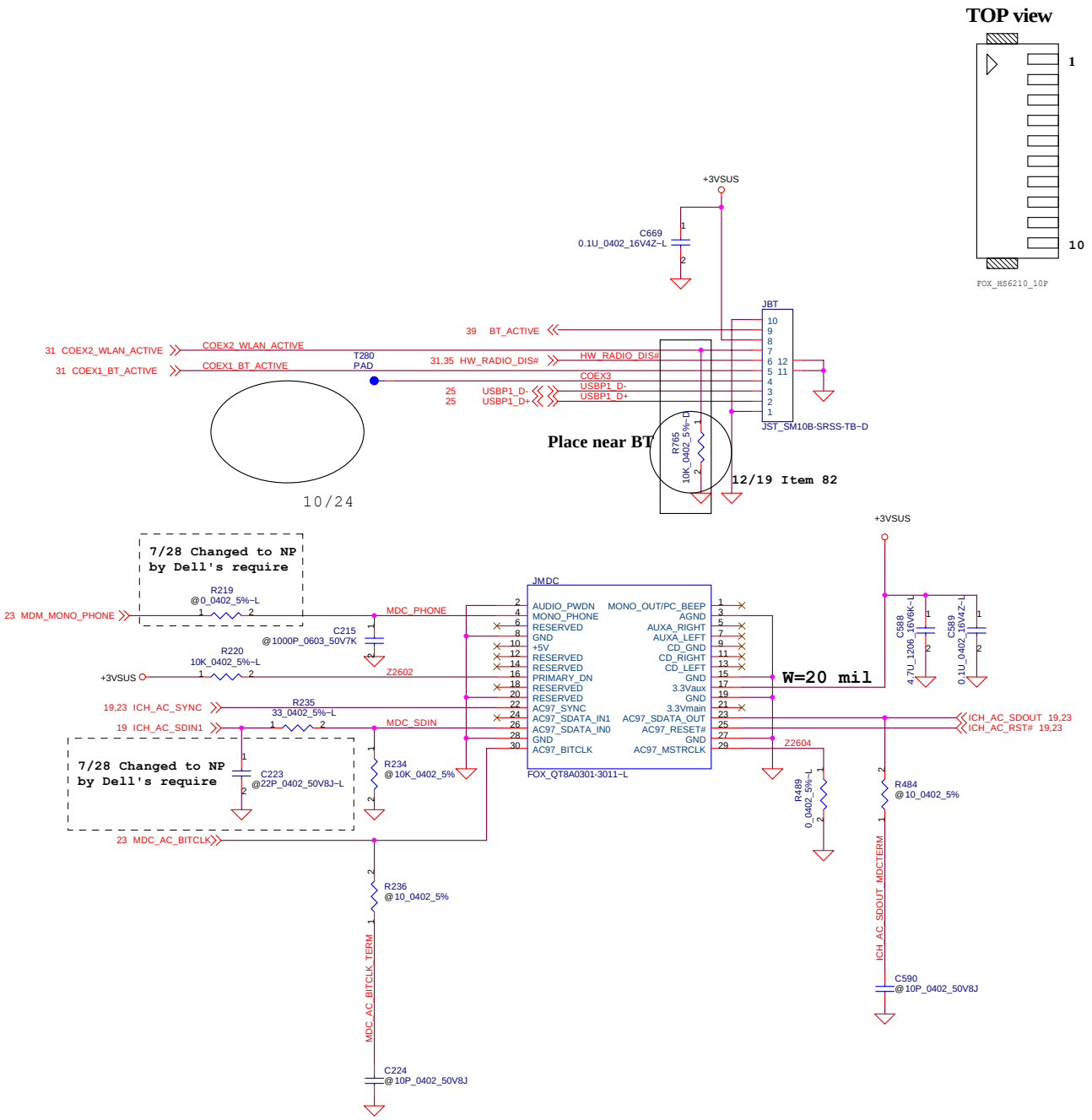

DELL CONFIDENTIAL/PROPRIETARY

Compal Electronics, Inc.

Title	BT PORT and MDC	
Size	Document Number BDQ11/LA-1601	Rev 0.5
Date: 星期四, 二月 06, 2003	Sheet 26 of 56	

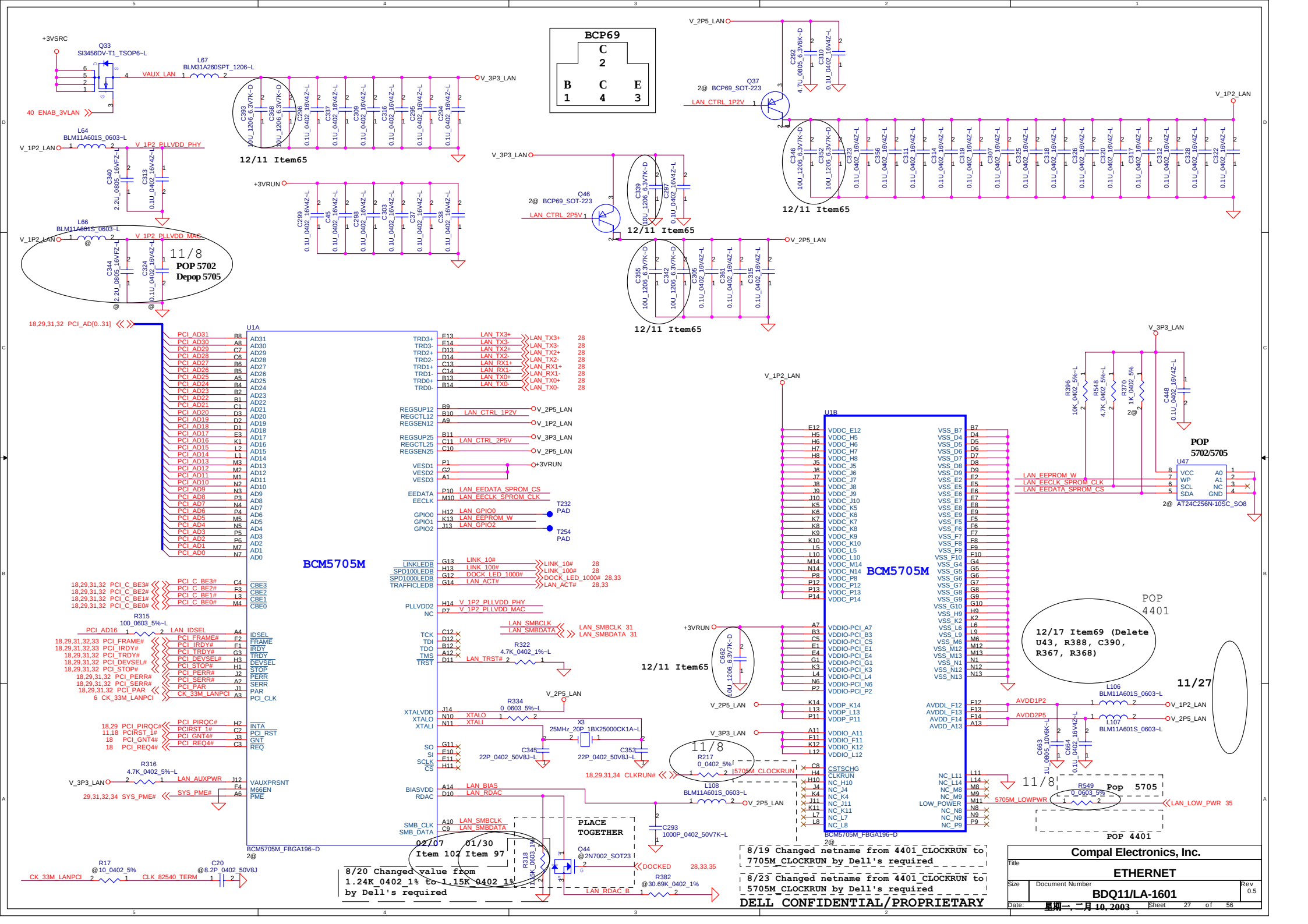

Compal Electronics, Inc.	
Title	ETHERNET
Size	Document Number: BDQ11/LA-1601
Rev	0.5
Date:	星期一, 二月 10, 2003
Sheet	27 of 56

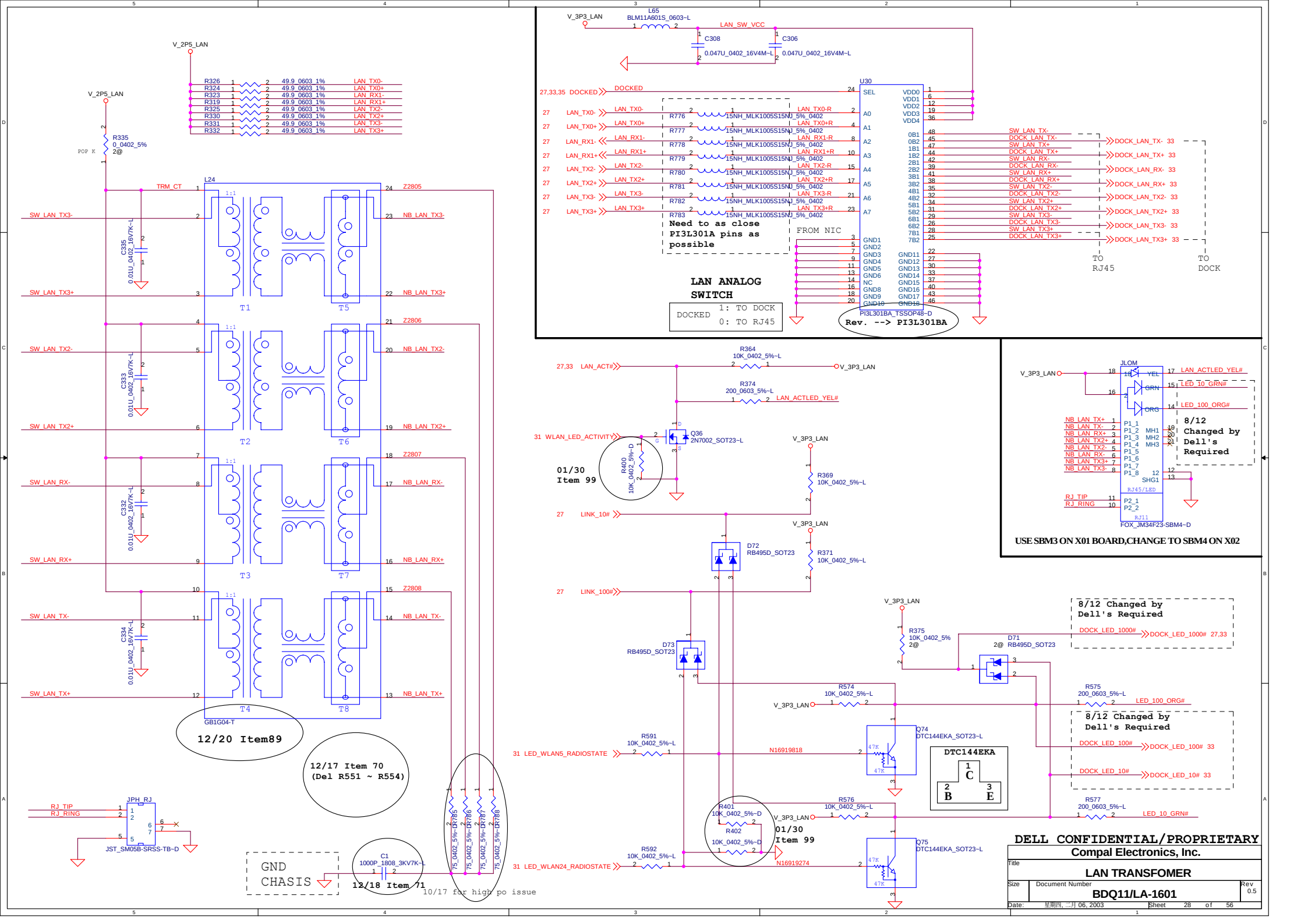
V_2P5_LAN
R326 49.9_0603_1% LAN_TX0-
R324 49.9_0603_1% LAN_TX0+
R323 49.9_0603_1% LAN_RX1-
R319 49.9_0603_1% LAN_RX1+
R325 49.9_0603_1% LAN_TX2-
R330 49.9_0603_1% LAN_TX2+
R331 49.9_0603_1% LAN_TX3-
R332 49.9_0603_1% LAN_TX3+
R335 0_0402_5% 2@
POP K
L24
TRM_CT
SW_LAN_TX3-
SW_LAN_TX3+
SW_LAN_TX2-
SW_LAN_TX2+
SW_LAN_RX-
SW_LAN_RX+
SW_LAN_TX-
SW_LAN_TX+
C335 0.01U_0402_16V7K-L
C333 0.01U_0402_16V7K-L
C332 0.01U_0402_16V7K-L
C334 0.01U_0402_16V7K-L
T1
T2
T3
T4
T5
T6
T7
T8
Z2805
Z2806
Z2807
Z2808
NB_LAN_TX3-
NB_LAN_TX3+
NB_LAN_TX2-
NB_LAN_TX2+
NB_LAN_RX-
NB_LAN_RX+
NB_LAN_TX-
NB_LAN_TX+
GB1G04-T
12/20 Item89
12/17 Item 70
(Del R551 ~ R554)
RJ_TIP
RJ_RING
JPH_RJ
JST_SM05B-SRSS-TB-D
GND
CHASIS
C1 1000P_1808_3KV7K-L
12/18 Item 71
75_0402_5%-LR785
75_0402_5%-LR786
75_0402_5%-LR787
75_0402_5%-LR788
10/17 for high po issue
V_3P3_LAN
L65 BLM11A601S_0603-L
LAN_SW_VCC
C308 0.047U_0402_16V4M-L
C306 0.047U_0402_16V4M-L
U30
PI3L301BA_TSSOP48-D
Rev. --> PI3L301BA
27,33,35 DOCKED
LAN_TX0- LAN_TX0+ LAN_RX1- LAN_RX1+ LAN_TX2- LAN_TX2+ LAN_TX3- LAN_TX3+
R776 15NH_MLK1005S15NJ_5%_0402
R777 15NH_MLK1005S15NJ_5%_0402
R778 15NH_MLK1005S15NJ_5%_0402
R779 15NH_MLK1005S15NJ_5%_0402
R780 15NH_MLK1005S15NJ_5%_0402
R781 15NH_MLK1005S15NJ_5%_0402
R782 15NH_MLK1005S15NJ_5%_0402
R783 15NH_MLK1005S15NJ_5%_0402
LAN_TX0-R LAN_TX0+R LAN_RX1-R LAN_RX1+R LAN_TX2-R LAN_TX2+R LAN_TX3-R LAN_TX3+R
Need to as close PI3L301A pins as possible
FROM NIC
SEL A0 A1 A2 A3 A4 A5 A6 A7
VDD0 VDD1 VDD2 VDD3 VDD4
0B1 0B2 1B1 1B2 2B1 2B2 3B1 3B2 4B1 4B2 5B1 5B2 6B1 6B2 7B1 7B2
GND1 GND2 GND3 GND4 GND5 GND6 NC GND8 GND9 GND10
GND11 GND12 GND13 GND14 GND15 GND16 GND17 GND18
SW_LAN_TX- DOCK_LAN_TX- SW_LAN_TX+ DOCK_LAN_TX+ SW_LAN_RX- DOCK_LAN_RX- SW_LAN_RX+ DOCK_LAN_RX+ SW_LAN_TX2- DOCK_LAN_TX2- SW_LAN_TX2+ DOCK_LAN_TX2+ SW_LAN_TX3- DOCK_LAN_TX3- SW_LAN_TX3+ DOCK_LAN_TX3+
DOCK_LAN_TX- 33 DOCK_LAN_TX+ 33 DOCK_LAN_RX- 33 DOCK_LAN_RX+ 33 DOCK_LAN_TX2- 33 DOCK_LAN_TX2+ 33 DOCK_LAN_TX3- 33 DOCK_LAN_TX3+ 33
TO RJ45
TO DOCK
LAN ANALOG SWITCH
DOCKED 1: TO DOCK 0: TO RJ45
R364 10K_0402_5%-L
R374 200_0603_5%-L
27,33 LAN_ACT#
LAN_ACTLED_YEL#
31 WLAN_LED_ACTIVITY
Q36 2N7002_SOT23-L
R400 10K_0402_5%-D
01/30 Item 99
R369 10K_0402_5%-L
27 LINK_10#
D72 RB495D_SOT23
R371 10K_0402_5%-L
27 LINK_100#
D73 RB495D_SOT23
JLOM
FOX_JM34F23-SBM4-D
LAN_ACTLED_YEL#
LED_10_GRN#
LED_100_ORG#
8/12 Changed by Dell's Required
USE SBM3 ON X01 BOARD,CHANGE TO SBM4 ON X02
R375 10K_0402_5% 2@
D71 2@ RB495D_SOT23
DOCK_LED_1000# 27,33
R574 10K_0402_5%-L
R575 200_0603_5%-L
R591 10K_0402_5%-L
31 LED_WLAN5_RADIOSTATE
N16919818
Q74 DTC144EKA_SOT23-L
DTC144EKA
DOCK_LED_100# 33
DOCK_LED_10# 33
R576 10K_0402_5%-L
R577 200_0603_5%-L
R401 10K_0402_5%-D
R402 10K_0402_5%-D
R592 10K_0402_5%-L
31 LED_WLAN24_RADIOSTATE
N16919274
Q75 DTC144EKA_SOT23-L
DELL CONFIDENTIAL/PROPRIETARY
Compal Electronics, Inc.
Title
LAN TRANSFOMER
Size
Document Number
BDQ11/LA-1601
Rev 0.5
Date: 星期四, 二月 06, 2003
Sheet 28 of 56

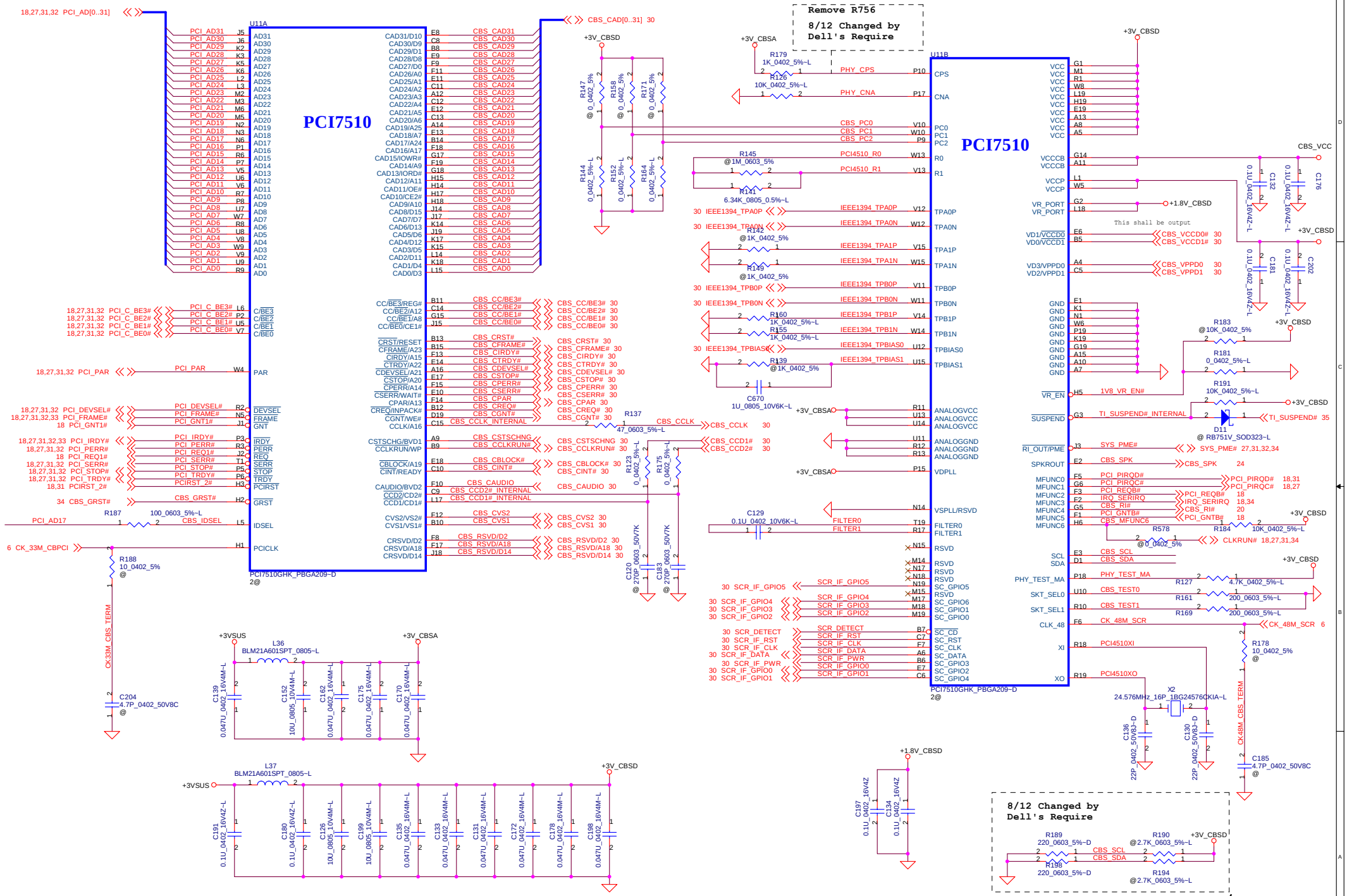

DELL CONFIDENTIAL/PROPRIETARY

Compal Electronics, Inc.

Title: PCMCIA Controller

Size | Document Number: BDQ11/LA-1601 | Rev 0.5

Date: 星期四, 二月 06, 2003 | Sheet 29 of 56

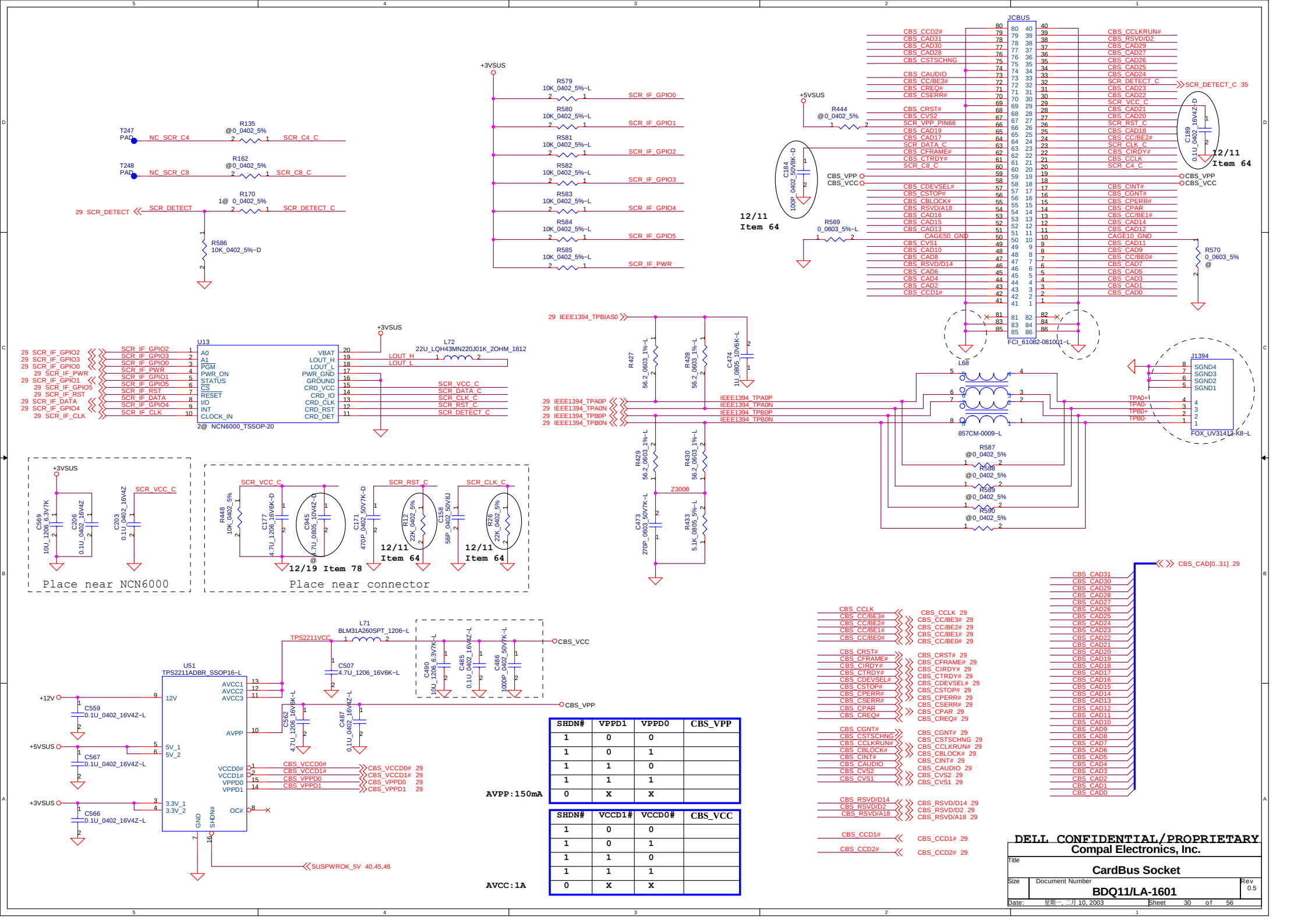

SHDN#	VPPD1	VPPD0	CBS_VPP
1	0	0	
1	0	1	
1	1	0	
1	1	1	
0	X	X	

AVPP:150mA

SHDN#	VCCD1#	VCCD0#	CBS_VCC
1	0	0	
1	0	1	
1	1	0	
1	1	1	
0	X	X	

AVCC:1A

DELL CONFIDENTIAL/PROPRIETARY
Compal Electronics, Inc.

Title: CardBus Socket

Size | Document Number: BDQ11/LA-1601 | Rev 0.5

Date: 星期一, 二月 10, 2003 | Sheet 30 of 56

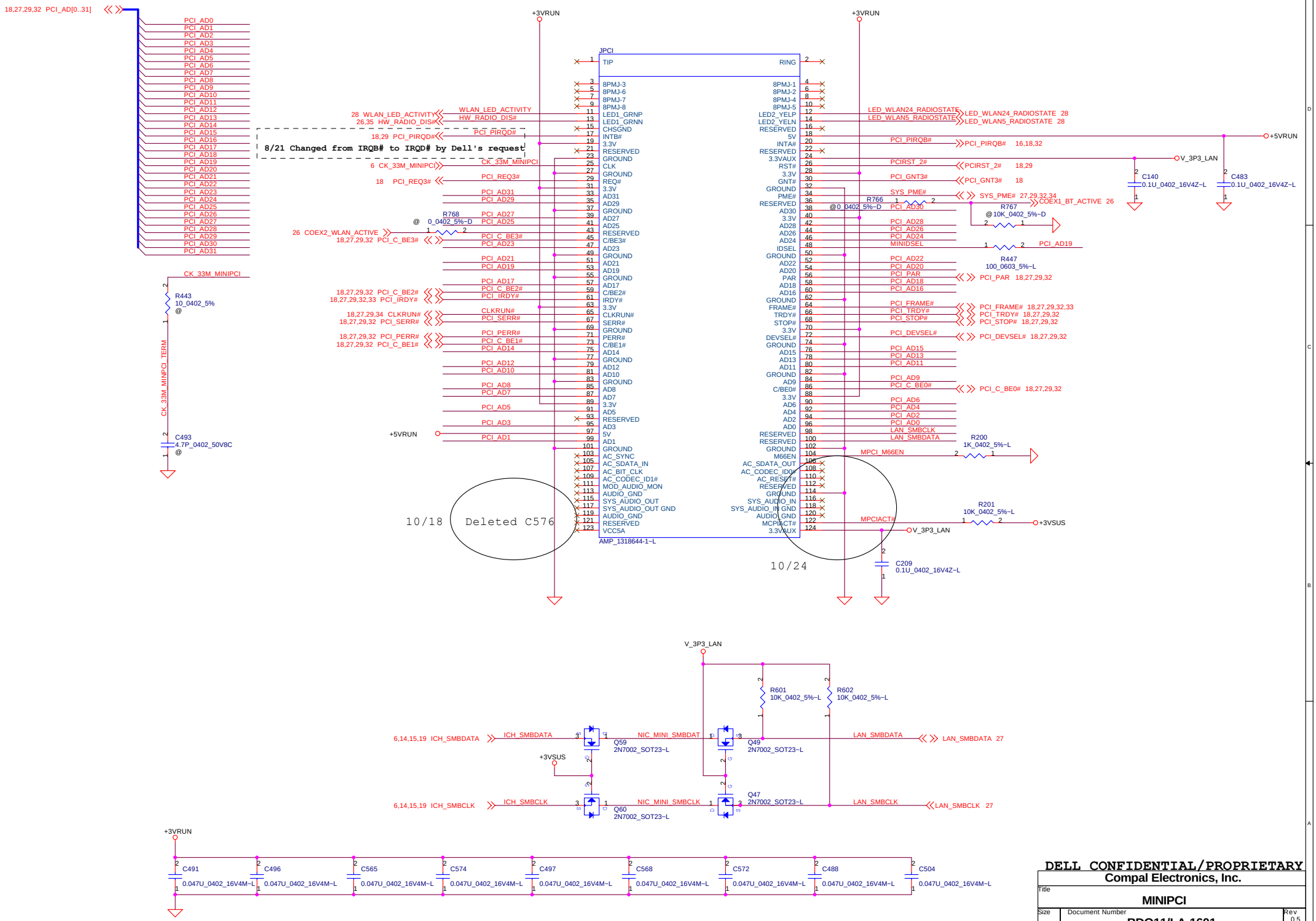

DELL CONFIDENTIAL/PROPRIETARY

Compal Electronics, Inc.

Title	**MINIPCI**	
Size	Document Number **BDQ11/LA-1601**	Rev 0.5
Date: 星期四, 二月 06, 2003	Sheet 31 of 56	

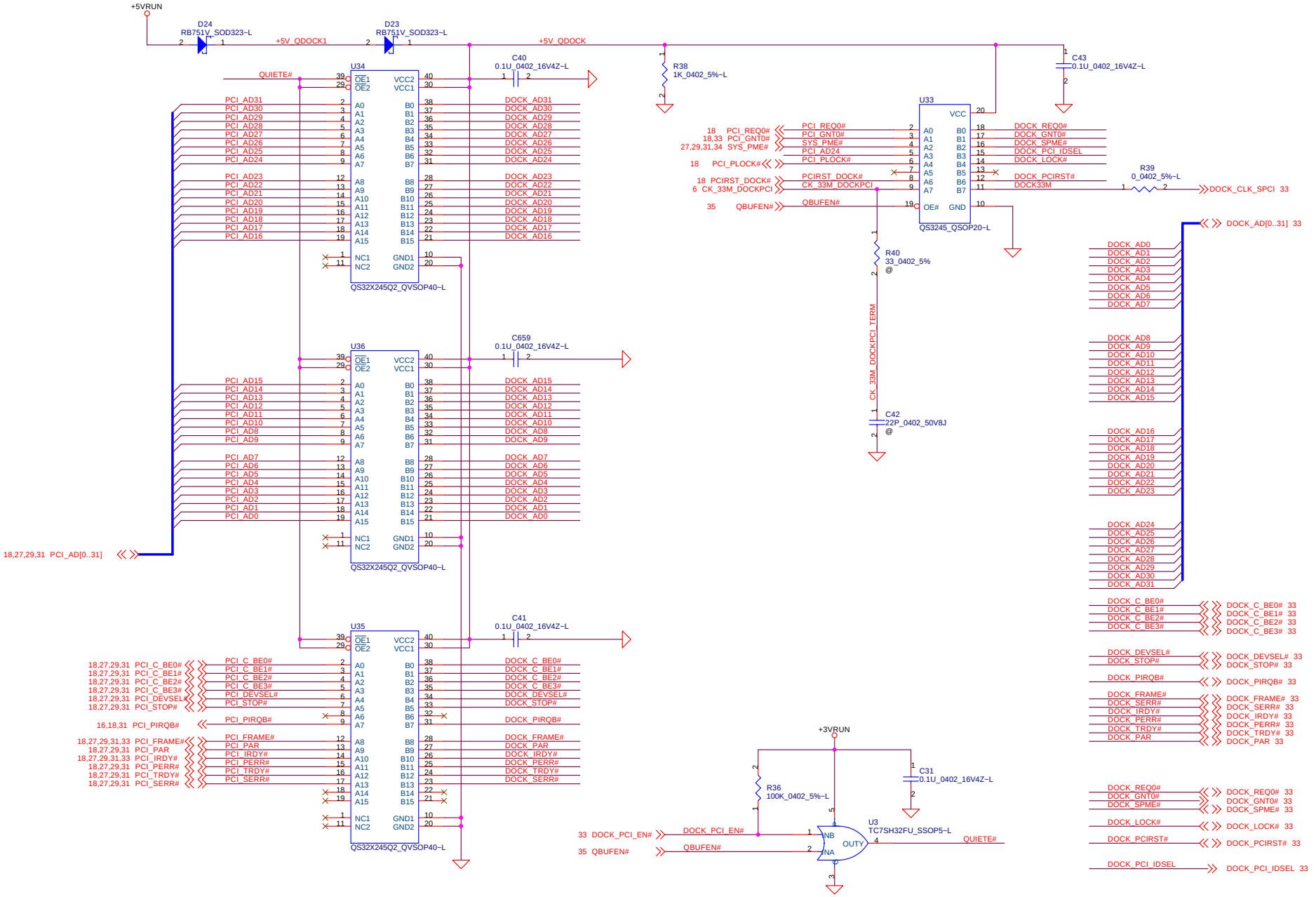

DELL CONFIDENTIAL/PROPRIETARY

Compal Electronics, Inc.

Title	**DOCKING BUFFER**	
Size	Document Number **BDQ11/LA-1601**	Rev 0.5
Date: 星期四, 二月 06, 2003	Sheet 32 of 56	

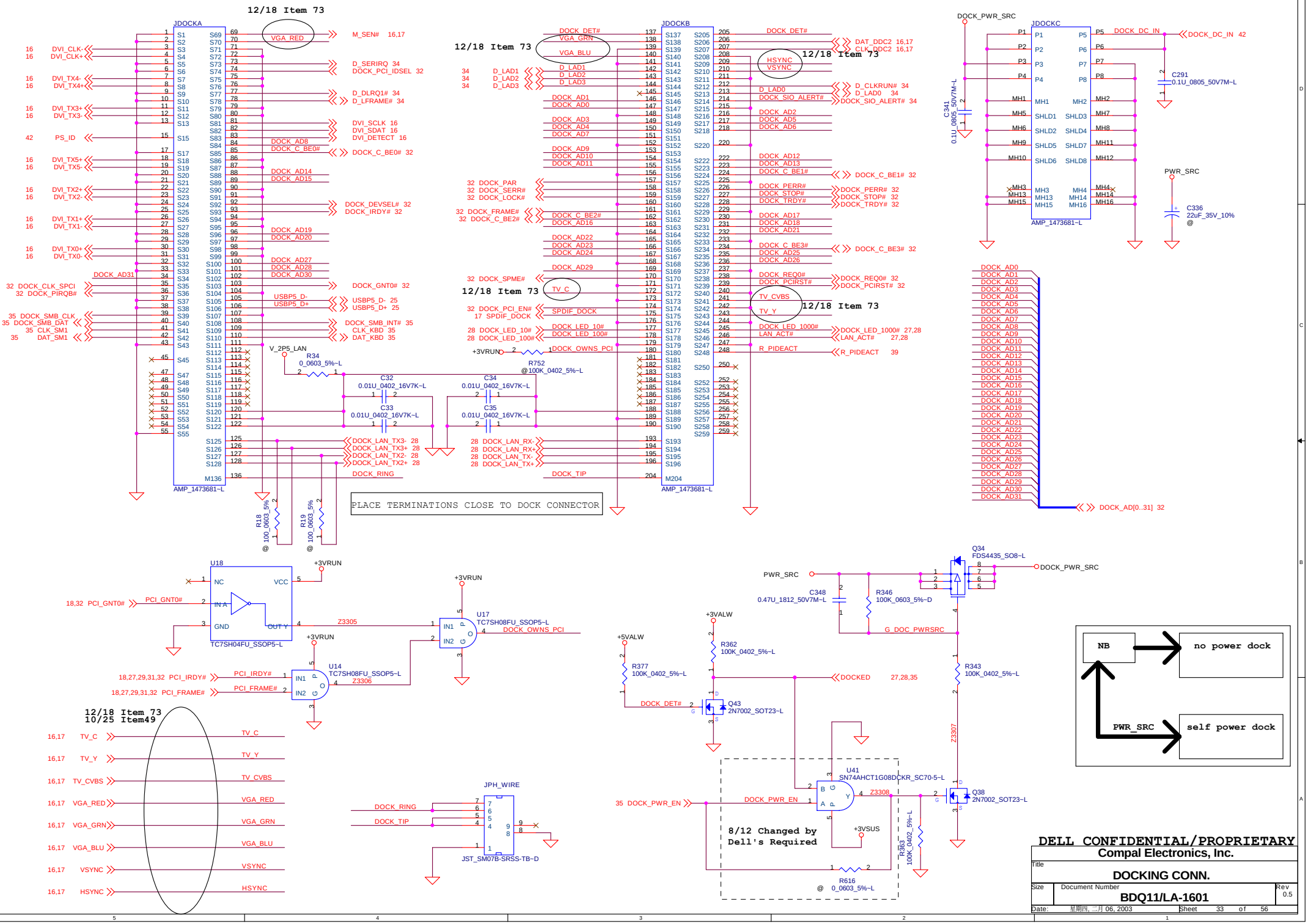

DELL CONFIDENTIAL/PROPRIETARY

Compal Electronics, Inc.

Title: DOCKING CONN.

Size | Document Number: BDQ11/LA-1601 | Rev: 0.5

Date: 星期四, 二月 06, 2003 | Sheet 33 of 56

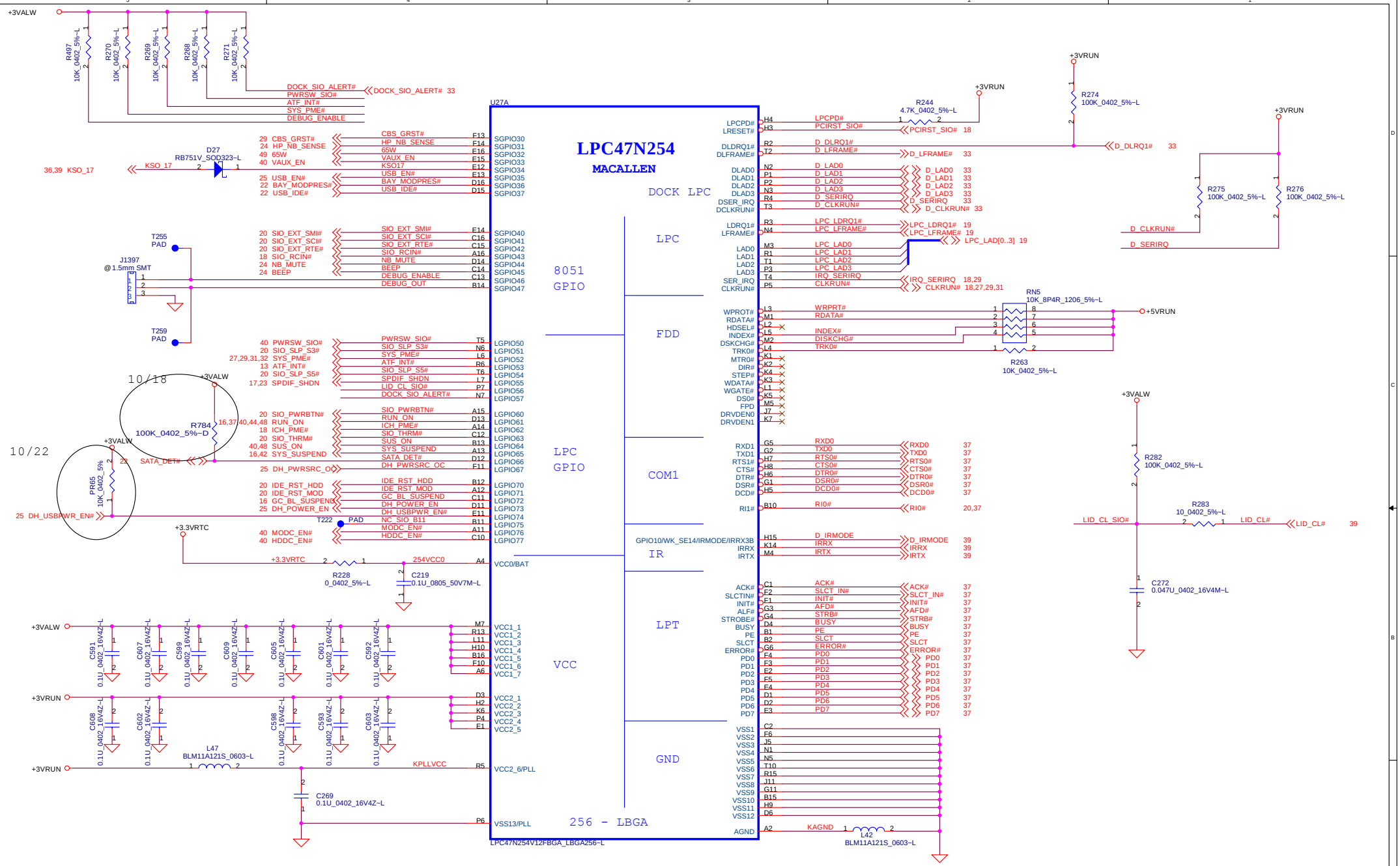

DELL CONFIDENTIAL/PROPRIETARY

Compal Electronics, Inc.

Title: SIO (1/2)

Size | Document Number: BDQ11/LA-1601 | Rev 0.5

Date: 星期四, 二月 06, 2003 | Sheet 34 of 56

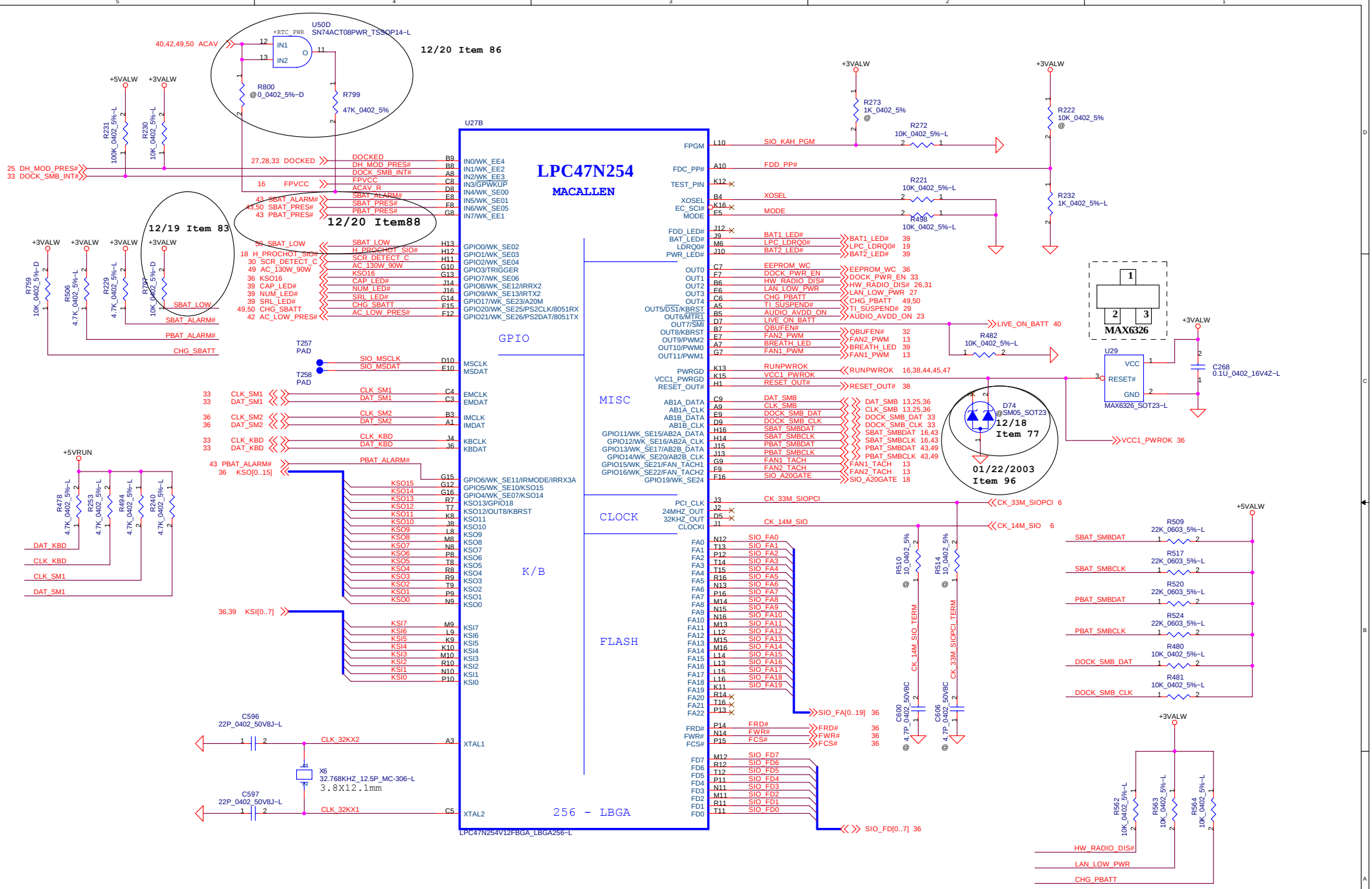

DELL CONFIDENTIAL/PROPRIETARY

Compal Electronics, Inc.

Title	SIO (2/2)	
Size	Document Number: BDQ11/LA-1601	Rev 0.5
Date: 星期三, 二月 12, 2003	Sheet 35 of 56	

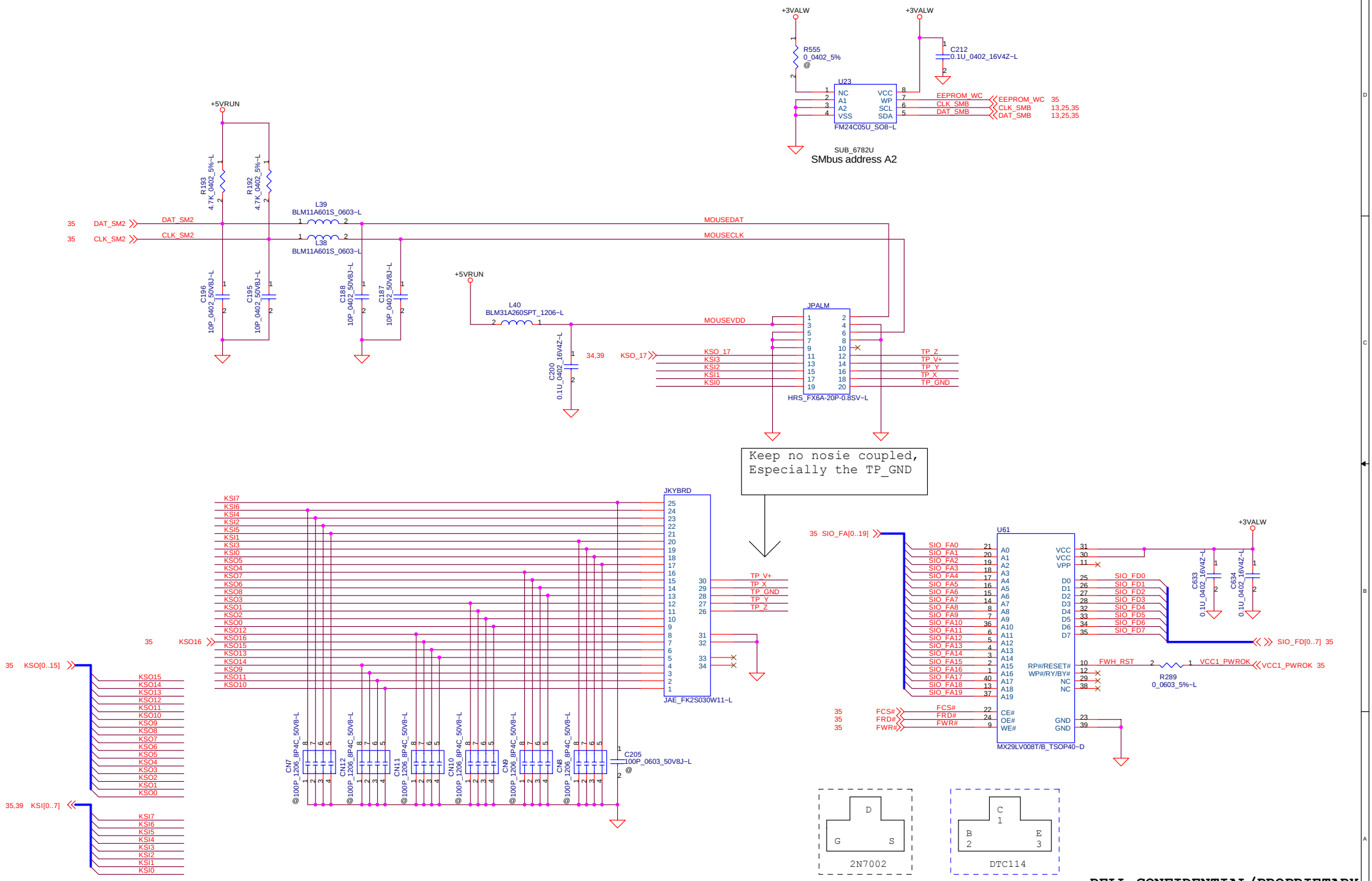

DELL CONFIDENTIAL/PROPRIETARY

Compal Electronics, Inc.

Title	**INT KB**
Size	Document Number: **BDQ11/LA-1601**
Rev	0.5
Date:	星期四, 二月 06, 2003
Sheet	36 of 56

Parallel Port

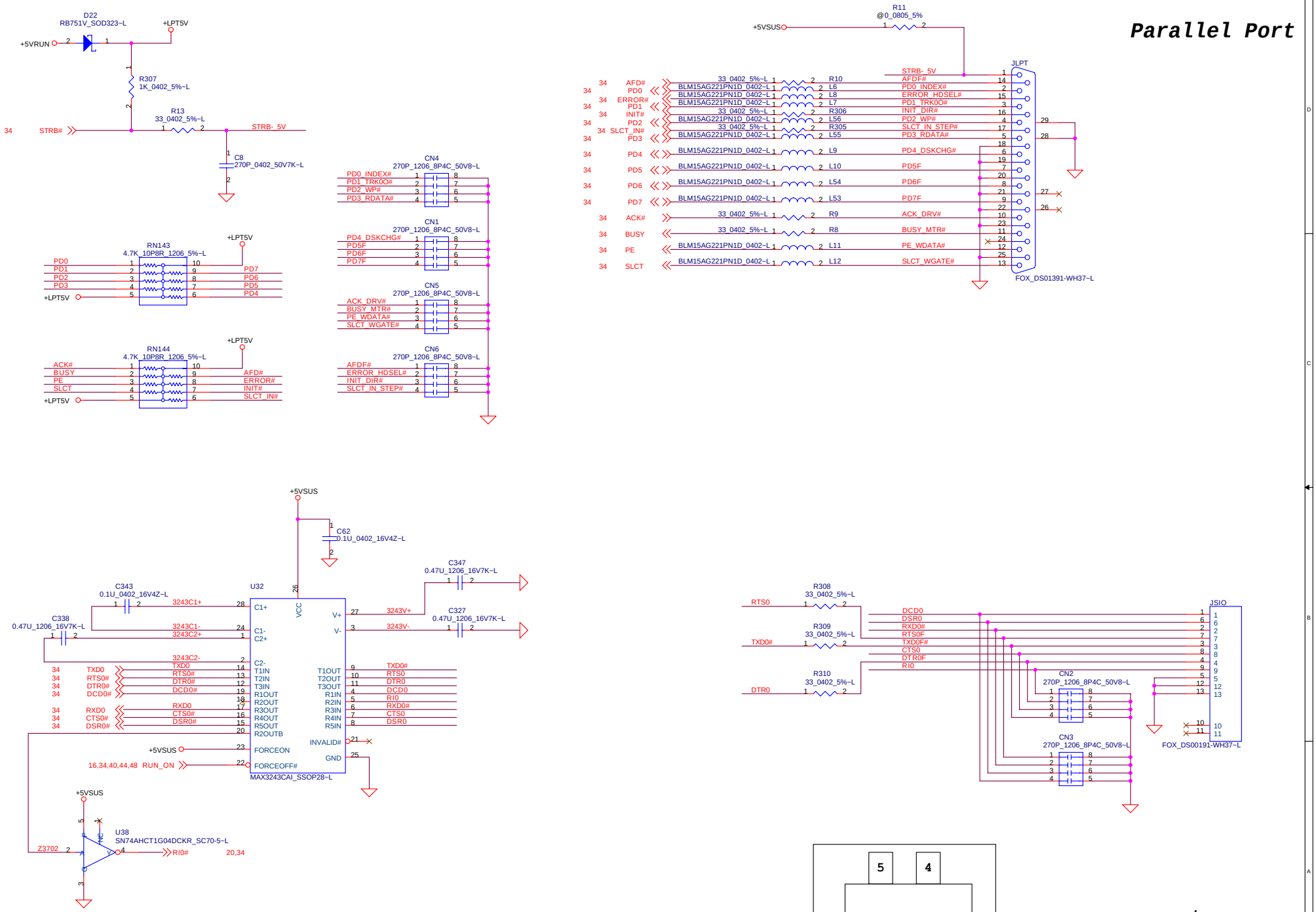

DELL CONFIDENTIAL/PROPRIETARY

Compal Electronics, Inc.

Title	LPT	
Size	Document Number: BDQ11/LA-1601	Rev 0.5
Date: 星期四, 二月 06, 2003	Sheet 37 of 56	

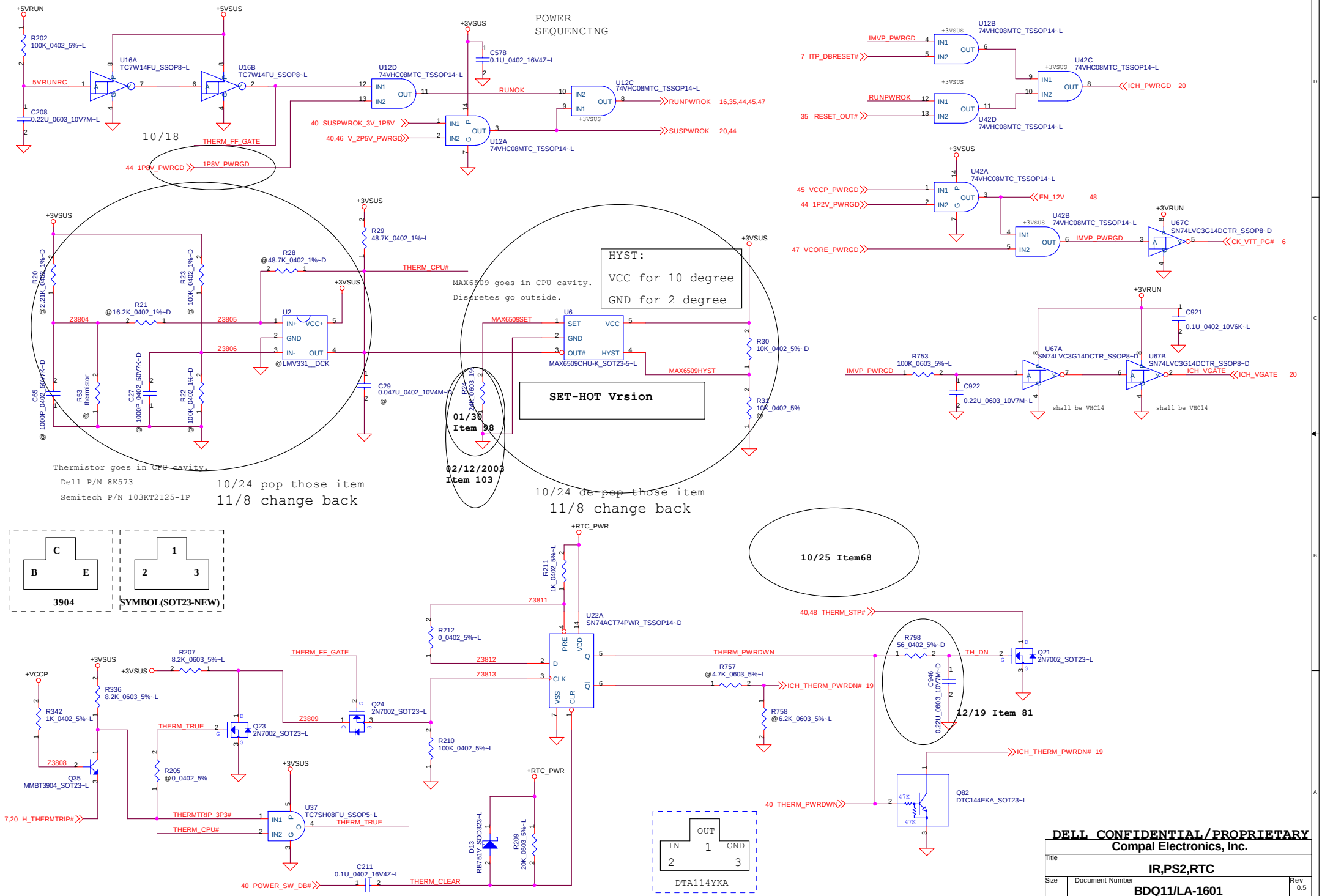

DELL CONFIDENTIAL/PROPRIETARY
Compal Electronics, Inc.

Title	IR,PS2,RTC
Size	
Document Number	BDQ11/LA-1601
Rev	0.5
Date:	星期三, 二月 12, 2003
Sheet	38 of 56

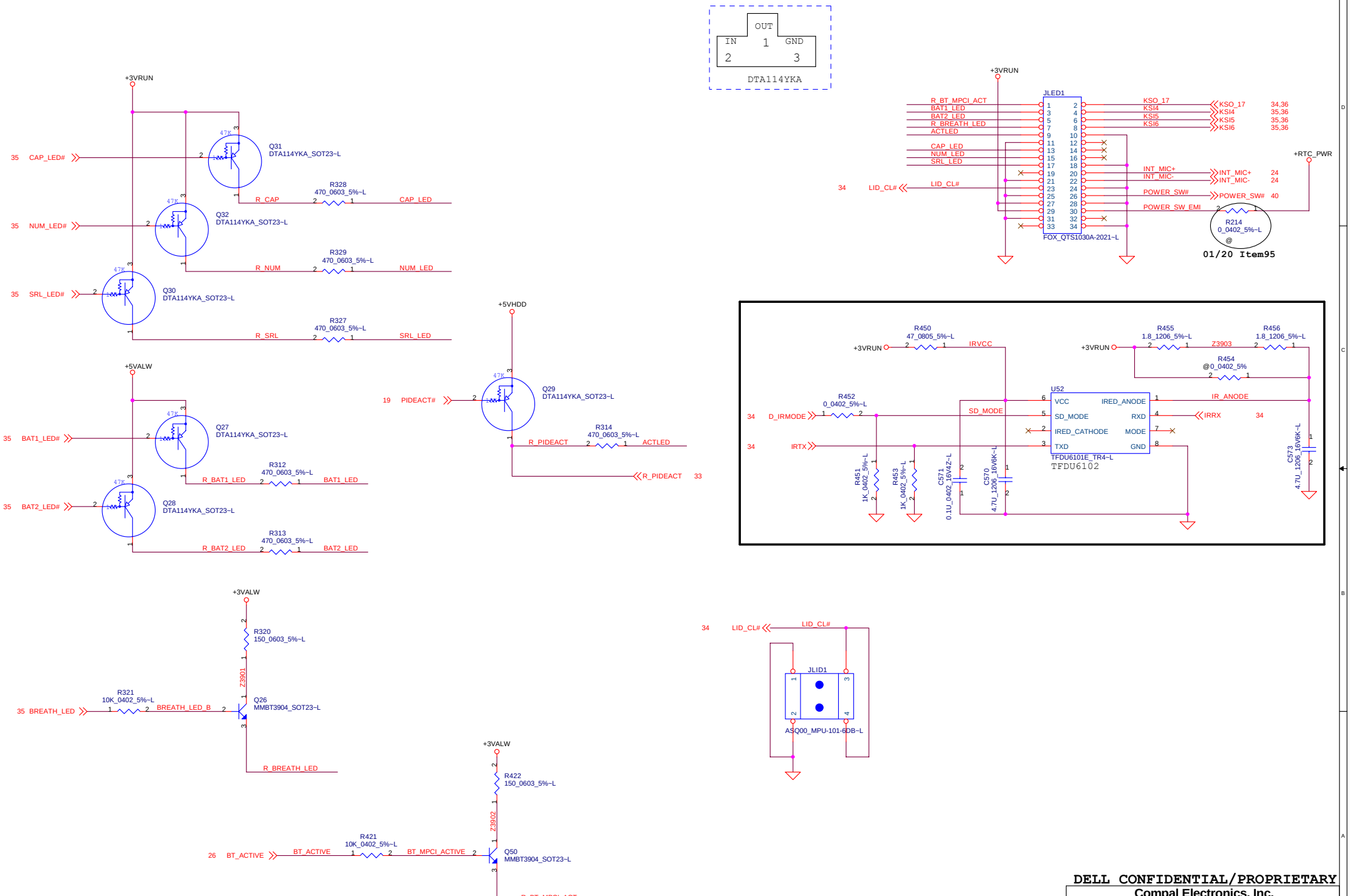

DELL CONFIDENTIAL/PROPRIETARY

Compal Electronics, Inc.

Title	JLED/IR/PS2	
Size	Document Number: BDQ11/LA-1601	Rev 0.5
Date: 星期四, 二月 06, 2003	Sheet 39 of 56	

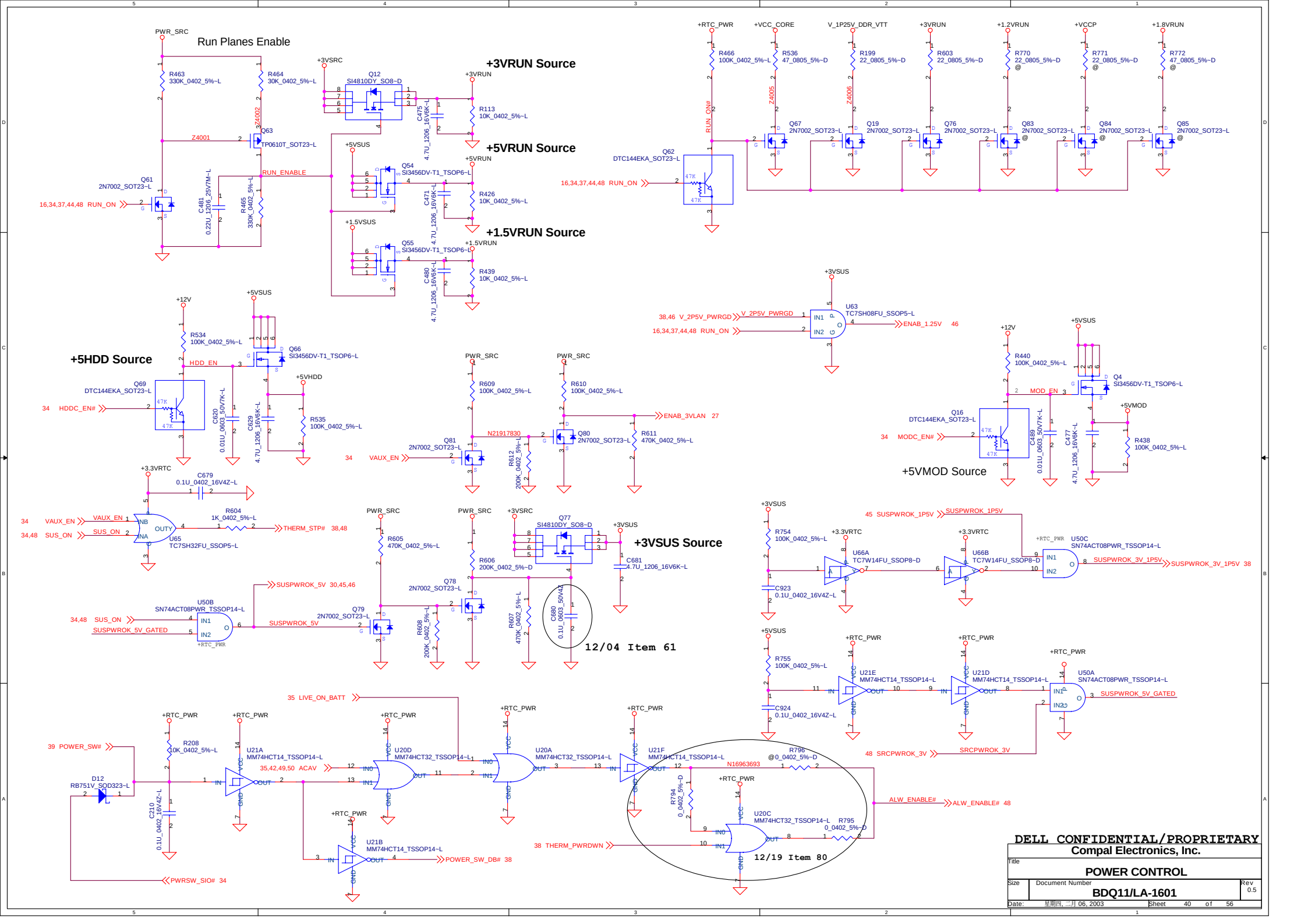
Run Planes Enable
+3VRUN Source
+5VRUN Source
+1.5VRUN Source
+5HDD Source
+3VSUS Source
+5VMOD Source
12/04 Item 61
12/19 Item 80
DELL CONFIDENTIAL/PROPRIETARY
Compal Electronics, Inc.
Title
POWER CONTROL
Size
Document Number
BDQ11/LA-1601
Rev
0.5
Date: 星期四, 二月 06, 2003
Sheet 40 of 56

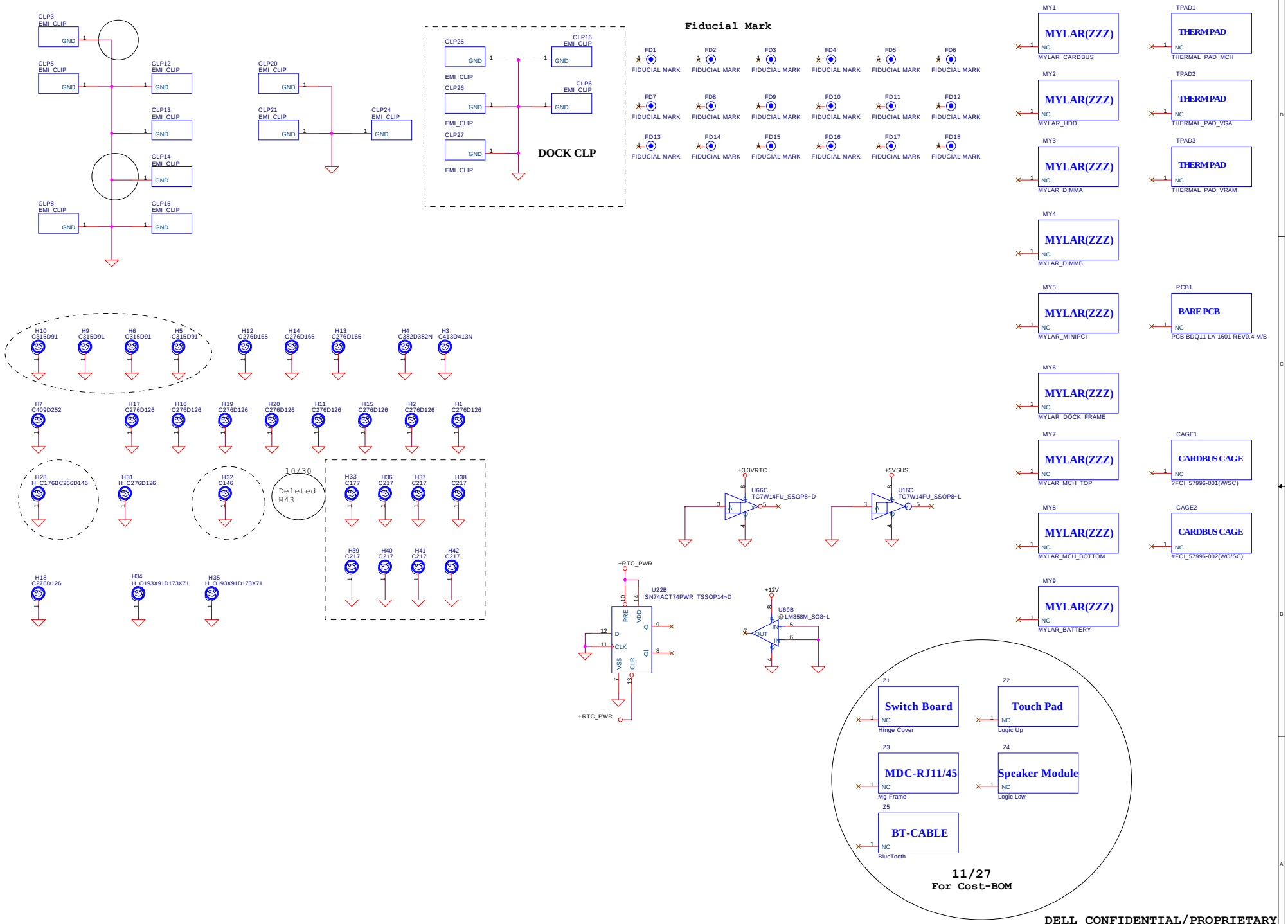

DELL CONFIDENTIAL/PROPRIETARY

Compal Electronics, Inc.

Title	PAD and Standoff	
Size	Document Number BDQ11/LA-1601	Rev 0.5
Date: 星期四, 二月 06, 2003	Sheet 41 of 56	

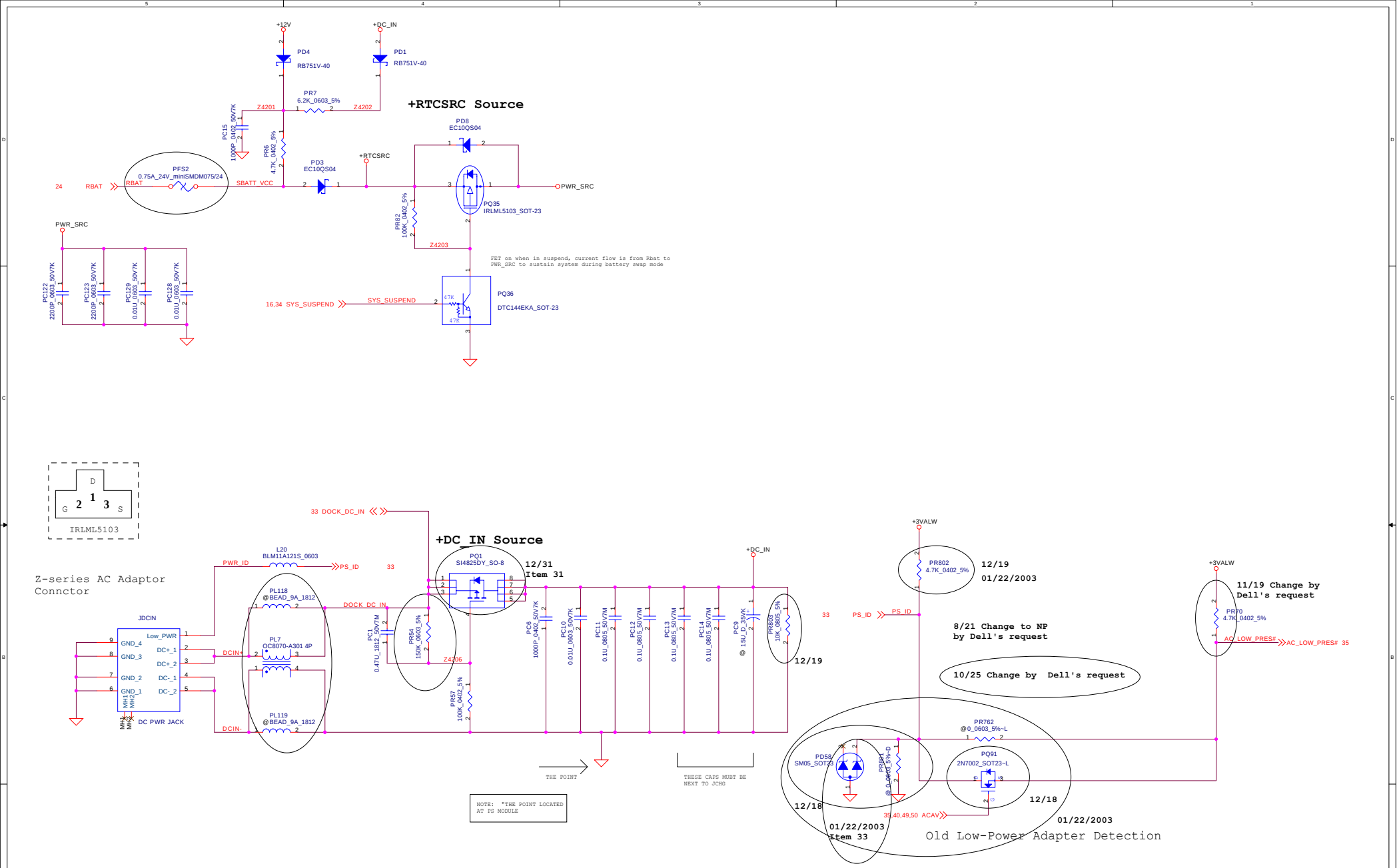

DELL CONFIDENTIAL/PROPRIETARY

Compal Electronics, Inc.

Title	DC-IN	
Size	Document Number: BDQ11/LA-1601	Rev 0.5
Date: 星期四, 二月 06, 2003	Sheet 42 of 56	

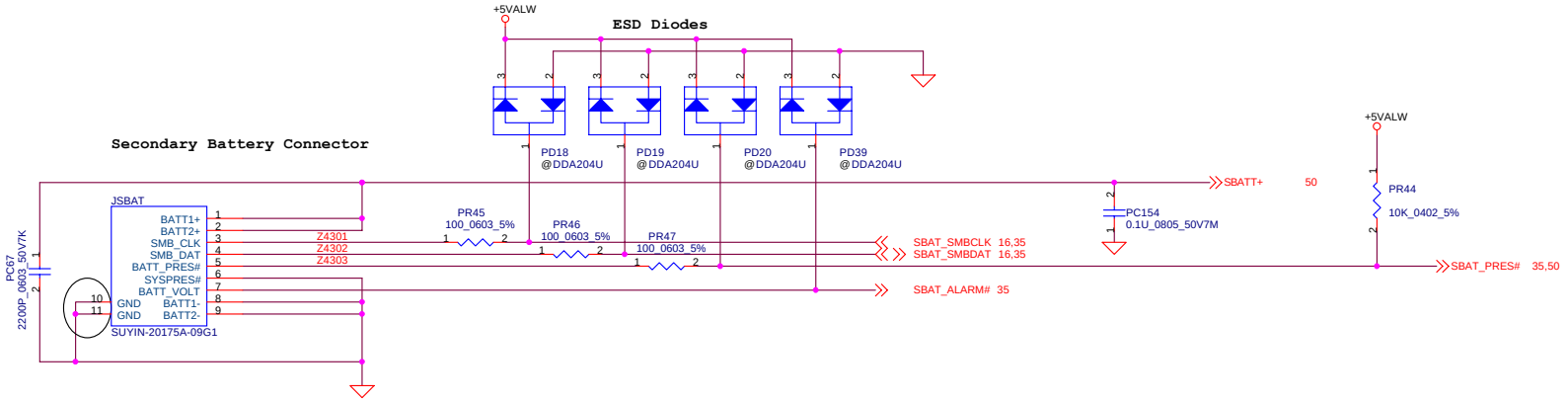

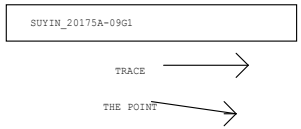

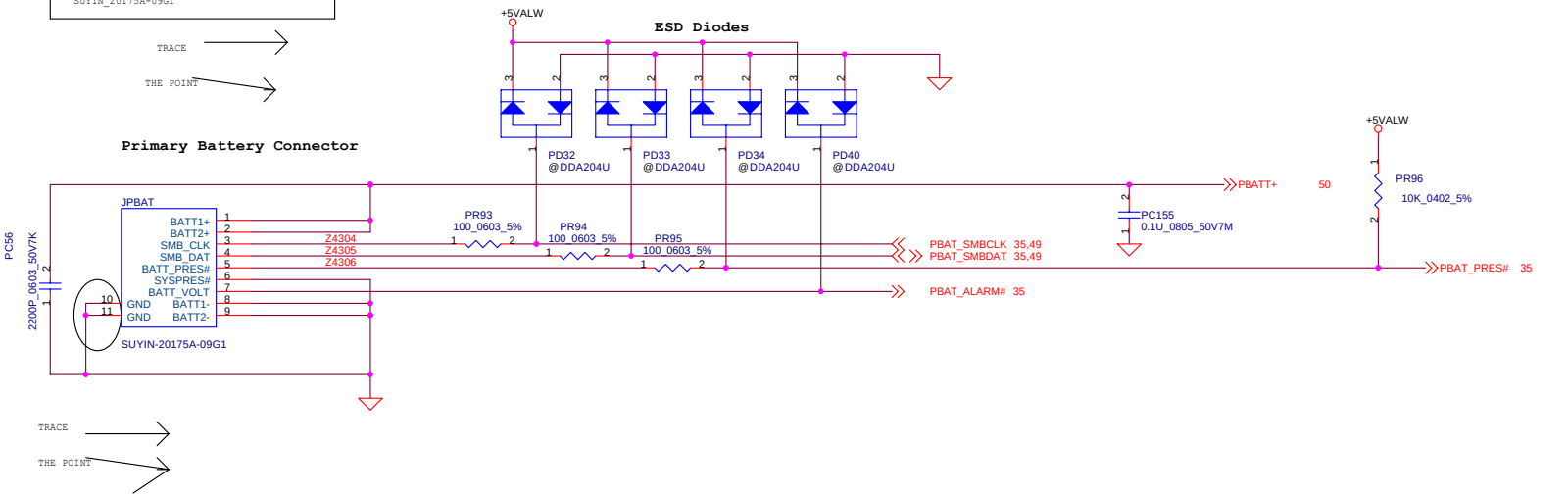

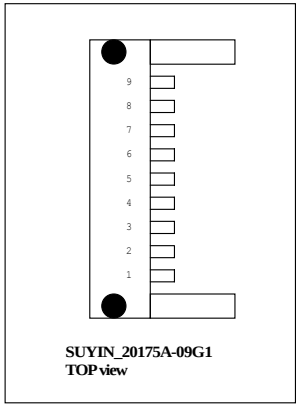

DELL CONFIDENTIAL/PROPRIETARY

Compal Electronics, Inc.

Title	Battery CONN.	
Size	Document Number: BDQ11/LA-1601	Rev 0.5
Date: 星期四, 二月 06, 2003	Sheet 43 of 56	

+1.2VRUN/+1.8VRUN SOURCE

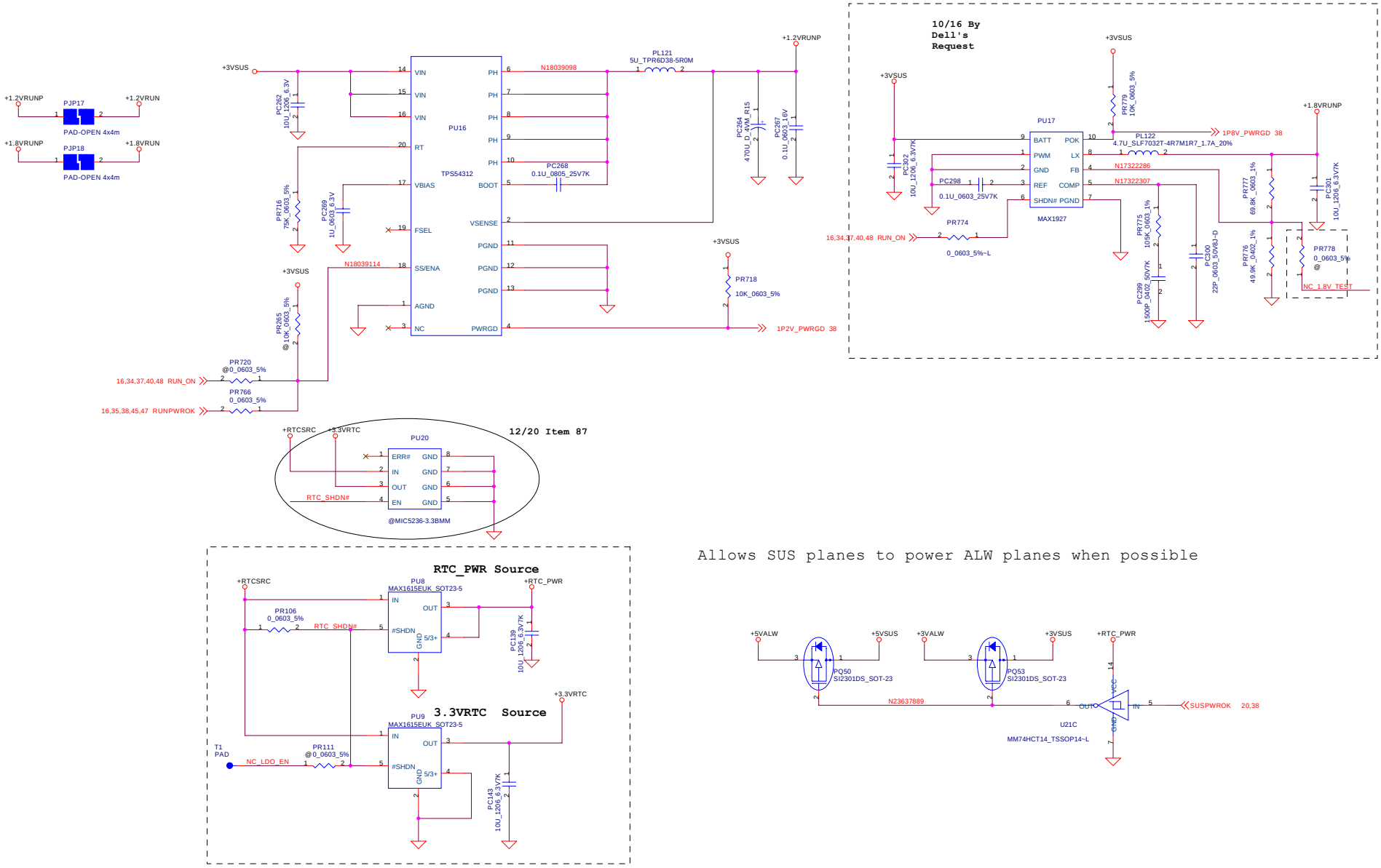

THIS SHEET OF ENGINEERING DRAWING IS THE PROPRIETARY PROPERTY OF COMPAL ELECTRONICS, INC. AND CONTAINS CONFIDENTIAL AND TRADE SECRET INFORMATION. THIS SHEET MAY NOT BE TRANSFERED FROM THE CUSTODY OF THE COMPETENT DIVISION OF R&D DEPARTMENT EXCEPT AS AUTHORIZED BY COMPAL ELECTRONICS, INC. NEITHER THIS SHEET NOR THE INFORMATION IT CONTAINS MAY BE USED BY OR DISCLOSED TO ANY THIRD PARTY WITHOUT PRIOR WRITTEN CONSENT OF COMPAL ELECTRONICS, INC.

DA0JM2MBCA1

Dell-Compal Confidential

DELL CONFIDENTIAL/PROPRIETARY

COMPAL ELECTRONICS, INC

Title	+1.2V & +1.8V	
Size	Document Number: BDQ11/LA-1601	Rev 0.5
Date: 星期四, 三月 06, 2003	Sheet 44 of 56	

+1.5VSUS/+1.05V(+VCCP)

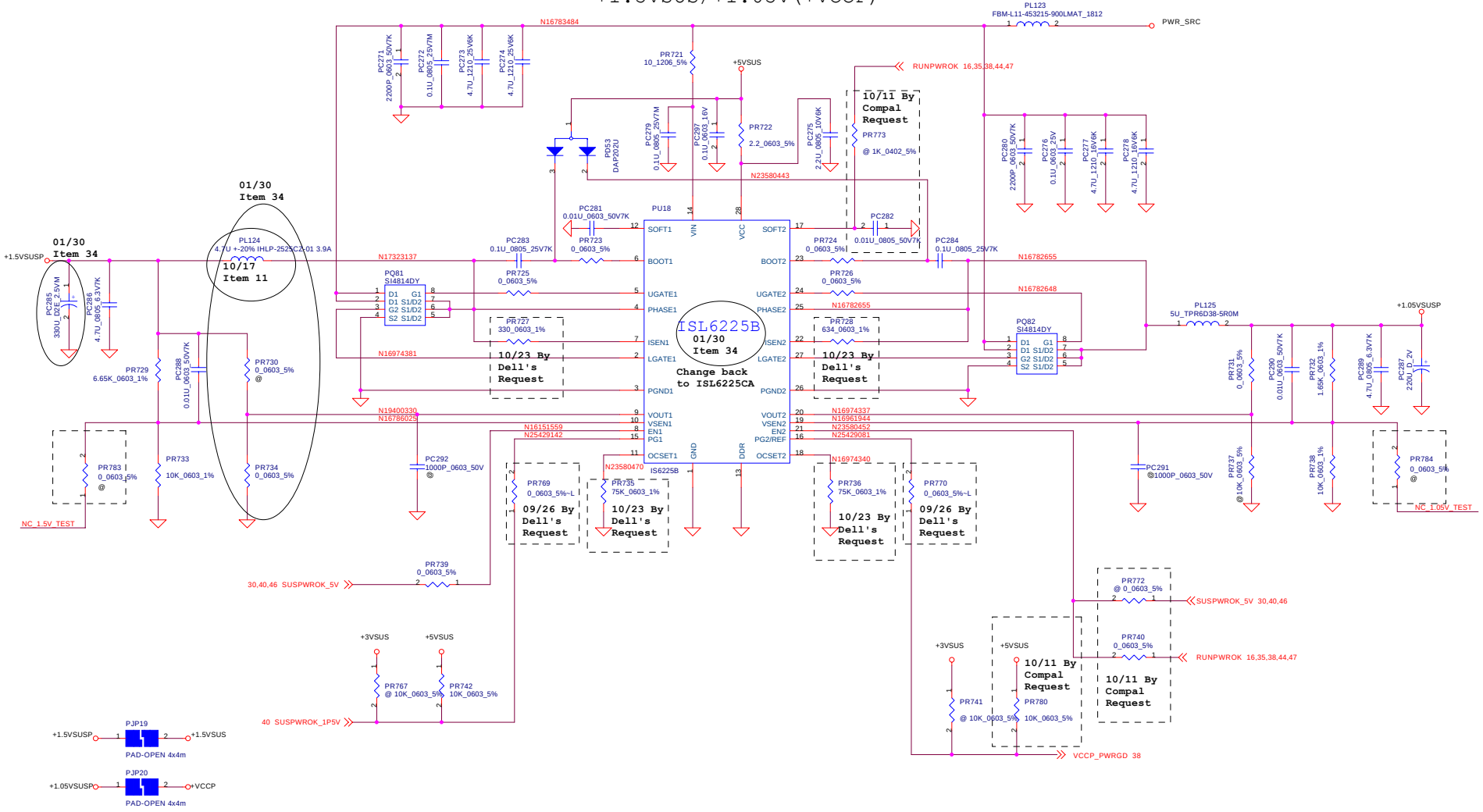

DELL CONFIDENTIAL/PROPRIETARY

THIS SHEET OF ENGINEERING DRAWING IS THE PROPRIETARY PROPERTY OF COMPAL ELECTRONICS, INC. AND CONTAINS CONFIDENTIAL AND TRADE SECRET INFORMATION. THIS SHEET MAY NOT BE TRANSFERED FROM THE CUSTODY OF THE COMPETENT DIVISION OF R&D DEPARTMENT EXCEPT AS AUTHORIZED BY COMPAL ELECTRONICS, INC. NEITHER THIS SHEET NOR THE INFORMATION IT CONTAINS MAY BE USED BY OR DISCLOSED TO ANY THIRD PARTY WITHOUT PRIOR WRITTEN CONSENT OF COMPAL ELECTRONICS, INC.

B

COMPAL ELECTRONICS, INC		
Title: +1.5V & +1.05V		
Size	Document Number: BDQ11/LA-1601	Rev 0.5
Date: 星期四, 二月 06, 2003	Sheet 45 of 56	

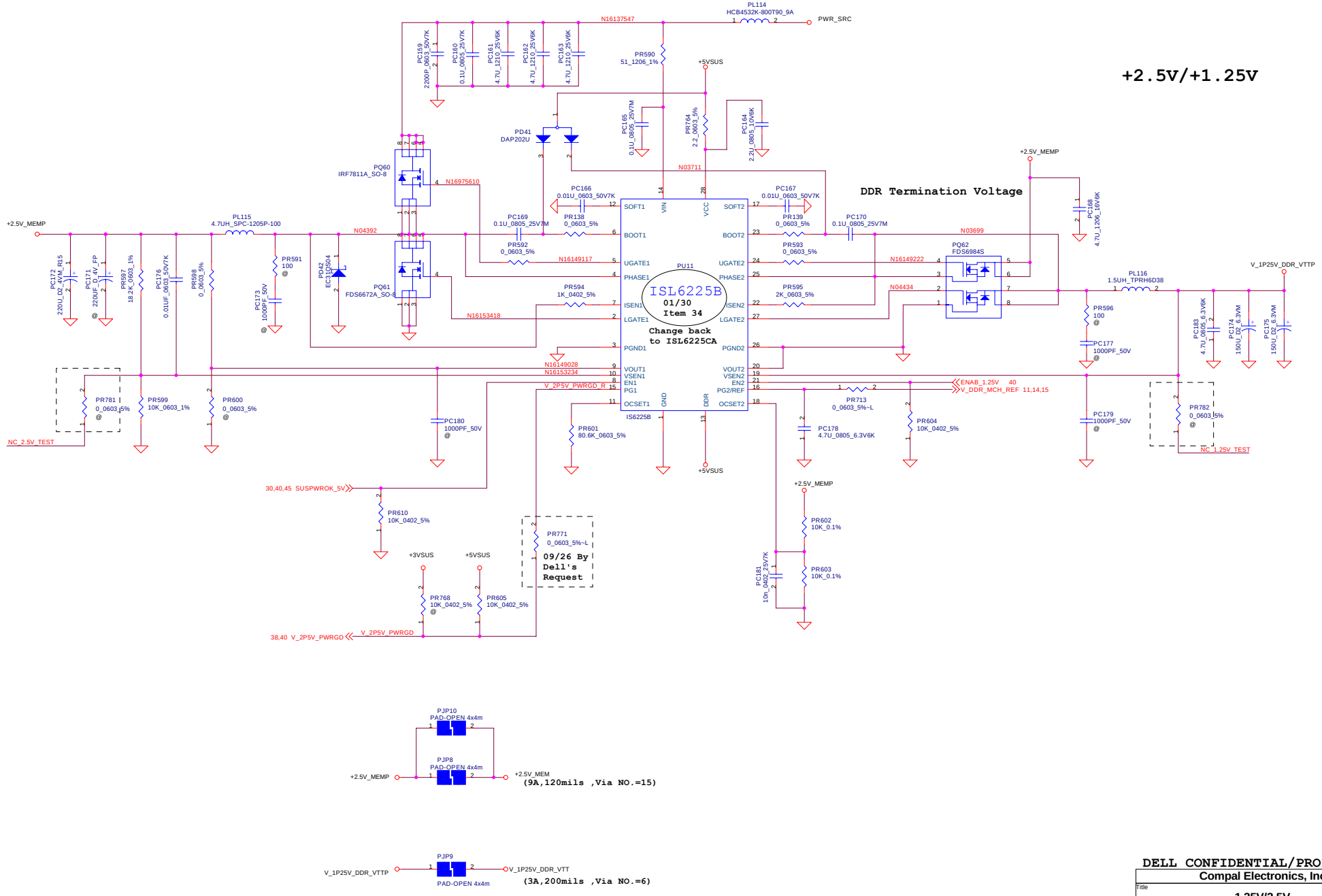

DELL CONFIDENTIAL/PROPRIETARY

Compal Electronics, Inc.

Title	1.25V/2.5V	
Size	Document Number BDQ11/LA-1601	Rev 0.5
Date: 星期四, 二月 06, 2003	Sheet 46 of 56	

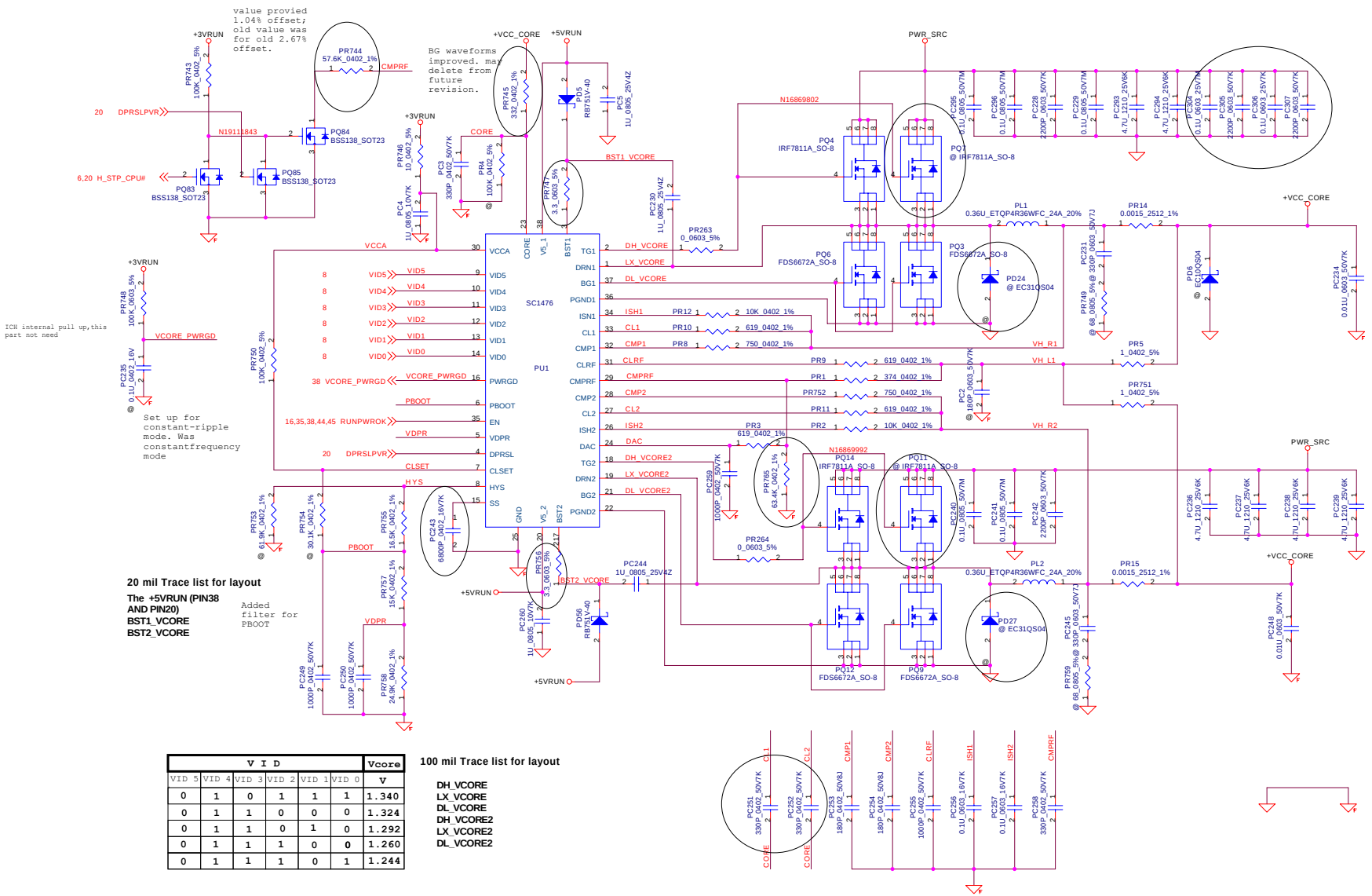

20 mil Trace list for layout

The +5VRUN (PIN38 AND PIN20)
BST1_VCORE
BST2_VCORE

V I D						Vcore
VID 5	VID 4	VID 3	VID 2	VID 1	VID 0	V
0	1	0	1	1	1	1.340
0	1	1	0	0	0	1.324
0	1	1	0	1	0	1.292
0	1	1	1	0	0	1.260
0	1	1	1	0	1	1.244

100 mil Trace list for layout

DH_VCORE
LX_VCORE
DL_VCORE
DH_VCORE2
LX_VCORE2
DL_VCORE2

DELL CONFIDENTIAL/PROPRIETARY

Compal Electronics, Inc.

Title: VCC_CORE

Size | Document Number: BDQ11/LA-1601 | Rev: 0.5

Date: 星期四, 二月 06, 2003 | Sheet 47 of 56

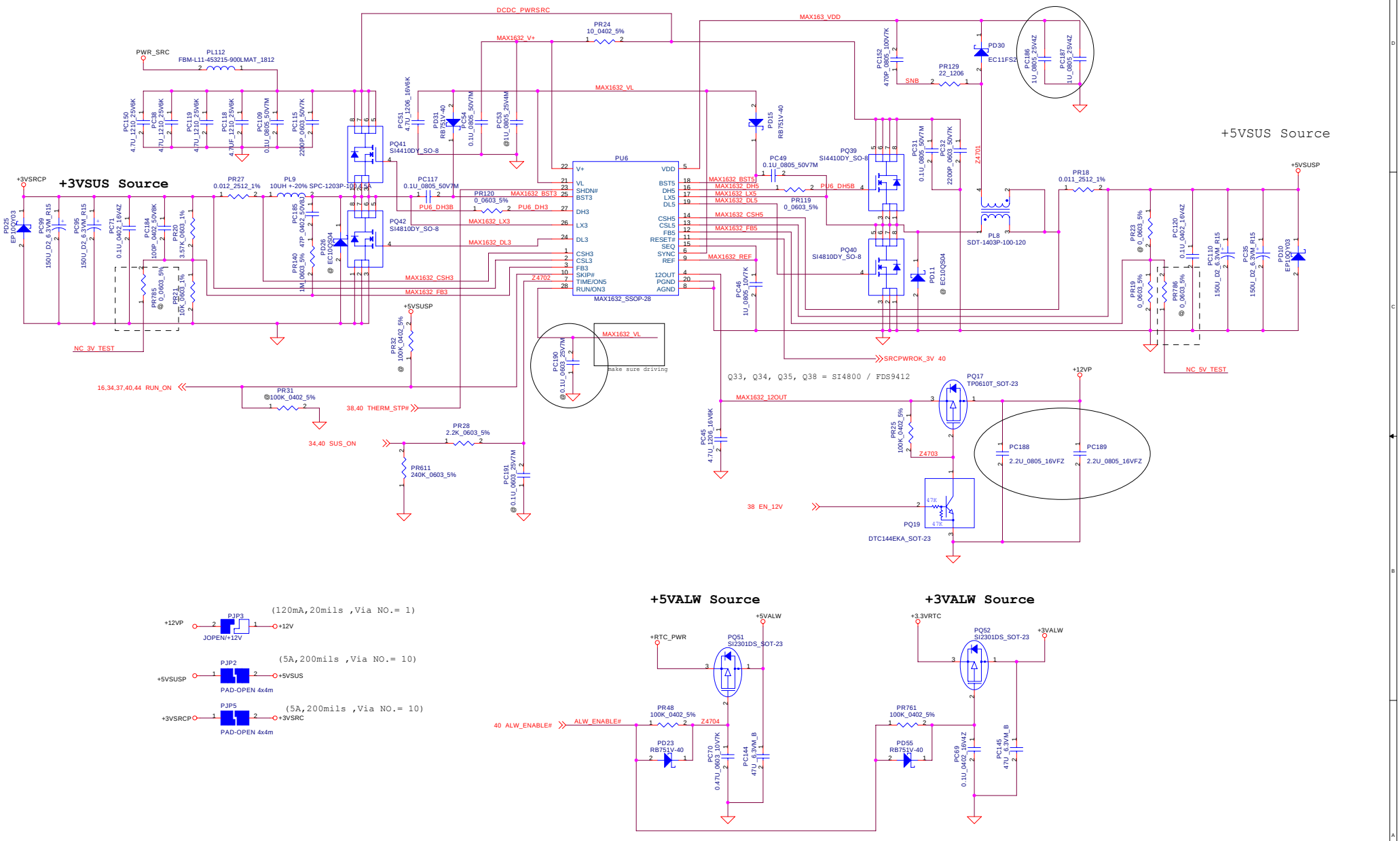

DELL CONFIDENTIAL/PROPRIETARY

Compal Electronics, Inc.

Title	DC to DC	
Size	Document Number: BDQ11/LA-1601	Rev 0.5
Date: 星期四, 二月 06, 2003	Sheet 48 of 56	

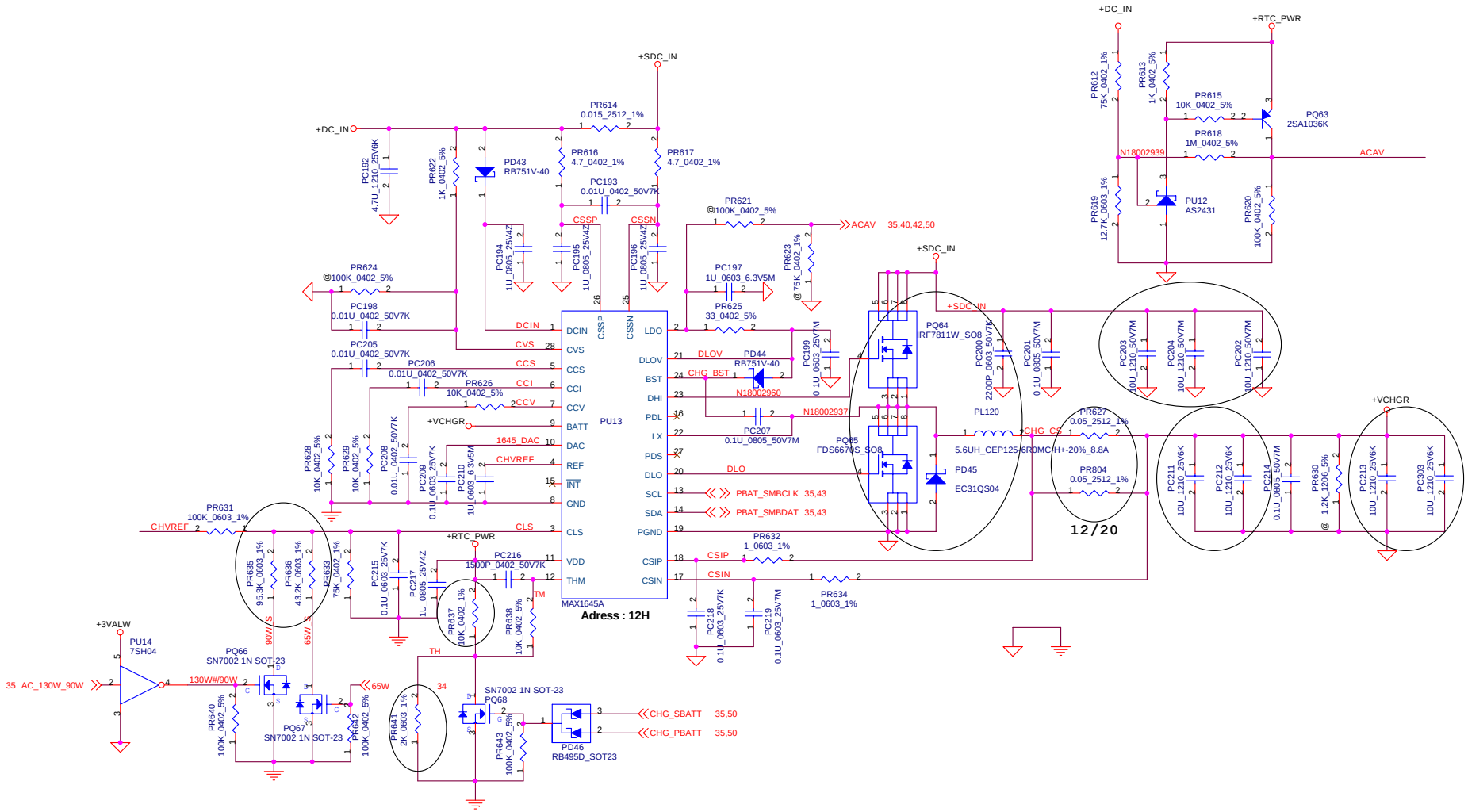

	65W (2.93A)	90W (4.0A)	130W (5.85A)
65W	H	L	L
AC_130W_90W	H	L	H

DELL CONFIDENTIAL/PROPRIETARY

Compal Electronics, Inc.

Title: CHARGER CONTROL

Size | Document Number: BDQ11/LA-1601 | Rev 0.5

Date: 星期四, 二月 06, 2003 | Sheet 49 of 56

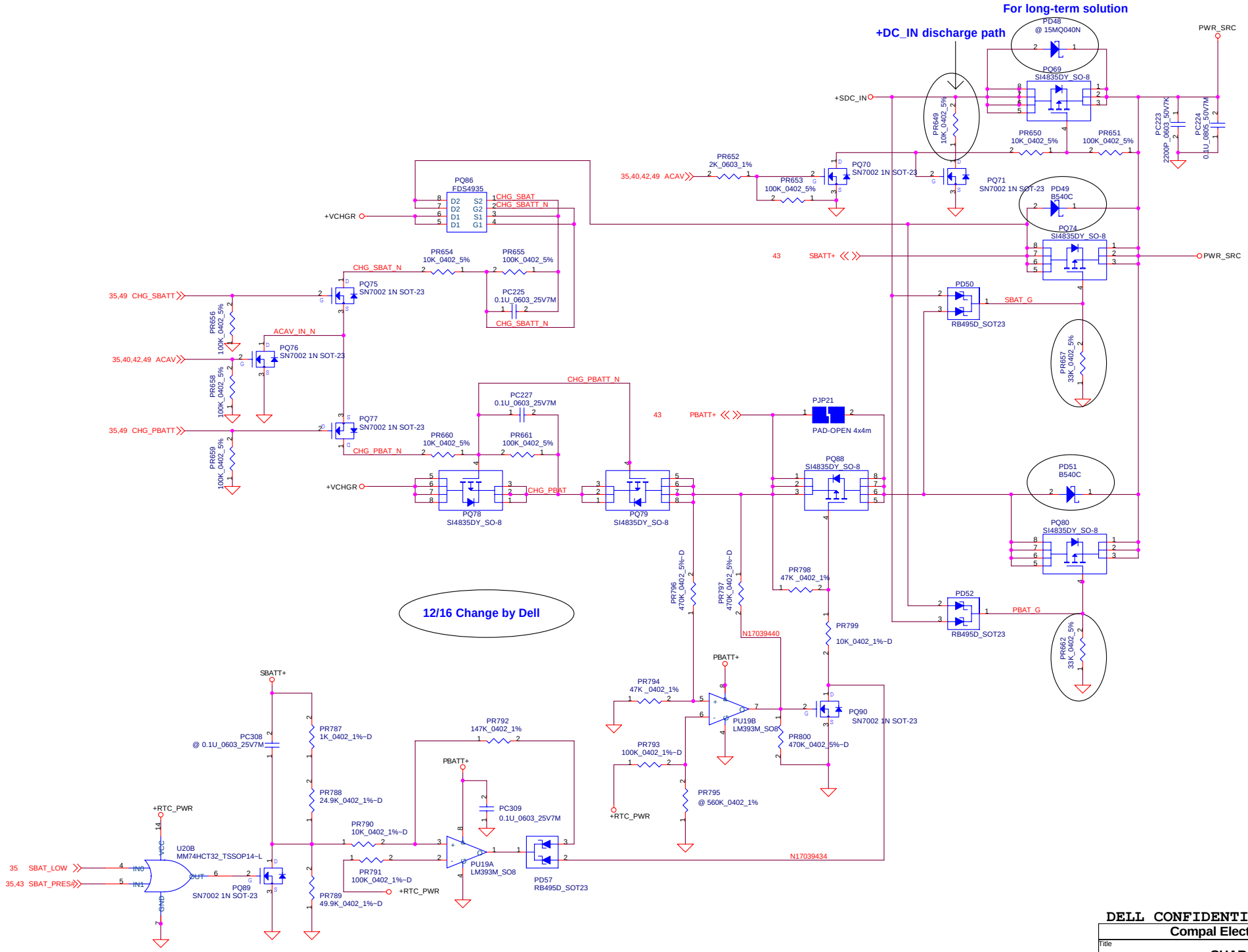

DELL CONFIDENTIAL/PROPRIETARY

Compal Electronics, Inc.

Title	**CHARGER**	
Size	Document Number **BDQ11/LA-1601**	Rev 0.5
Date: 星期四, 二月 06, 2003	Sheet 50 of 56	

Version Change List (P. I. R. List)

Item	Page#	Title	Date	Request Owner	Issue Description	Solution Description	Rev.
1	27	Ethernet	8/18/2002	Dell	R318 use the same value as Lindbergh	R318 change the value from 1240Ω to 1140Ω	X00
2	27	Ethernet	8/18/2002	Dell	Netname change for A-2 chip	Change netname from 4401_CLOCKRUN to 7705M_CLOCKRUN	X00
3	27	Ethernet	8/18/2002	Dell	Populate R549 for 5705m controller	5702 controller do not need to change	X00
4	27	Ethernet	8/18/2002	Dell	Delete "POP SMBUS ISOLATION FOR 5702" text	Delete text	X00
5	28	LAN Transformer	8/18/2002	Dell	No need for RN1 pins 1,2,3,4 to ground connection	Delete RN1 pins 1,2,3,4 to ground connection	X00
6	28	LAN Transformer	8/18/2002	Dell	Delete the net name LIN_1000# and rename net of Pin G12 of U1A, Page 27, to DOCK_LED_1000#	Delete the net name LIN_1000#, rename net of Pin G12 of U1A to DOCK_LED_1000#	X00
7	8	Banias Processor	8/20/2002	Dell	PJP11 & PJP16 text discribe error	Change PJP11 to Short, and PJP16 to Open.	X00
8	27	Ethernet	8/20/2002	Dell	So for now we can use 1150 Ohm 1% resistor for R318 and we will continue with the 5702 controller	R318 change the value from 1140Ω to 1150Ω	X00
9	31	MINI PCI	8/20/2002	Dell	Change pin 17 of JPCI from PCI_PIRQB#to PCI_PIRQD#	Change pin 17 of JPCI connection to PCI_PIRQD#	X00
10	42	Power DC-IN	8/20/2002	Dell	Change PQ32, PR73, PR74, PR77 to NP	Updated PQ32, PR73, PR74, PR77 to NP	X00
11	1	Cover page	8/22/2002	Dell	On the title page place the name of the project Kapalua	Updated Schematic cover page text	X00
12	27	Ethernet	8/23/2002	Dell	Changed netname from 7705M_CLOCKRUN to 5705M_CLOCKRUN	Updated netname from 7705M_CLOCKRUN to 5705M_CLOCKRUN	X00
13	28	LAN Transformer	8/23/2002	Dell	Add 0Ω (0402 resistors) resistors to LAN_TX0-/LAN_TX0+, LAN_RX1-, LAN_RX1+, LAN_TX2-, LAN_TX2+, LAN_TX3-, LAN_TX3+	Add R776, R777, R778, R779, R780, R781, R782 and R783	X00
14	40	Power Control	8/29/2002	Dell	Using wrong Control signal of 1.8V rail drain on Q85.2	change the control signal of 1.8V rail drain from RUN_ON# to RUN_ON	X00
15	44	1.8V / 1.2V	8/29/2002	Compal	Change the control signal of 1.2VRUN from RUN_ON to RUNPWROK	Add PR766 connect to RUNPWROK, and reserved PR720 to NP	X00
16	47	Vcc_core	9/03/2002	Dell	Banias update PBOOT voltage spec with 1.2V	change PR755 to 16.5K and PR757 to 15K	X00
17	40	Power Control	9/04/2002	Compal	System doesn't work in using battery only	change R606 value from 470K to 200K	X00
18	40	Power Control	9/04/2002	Compal	Reduce +3VSUS power rail up response time and solve unexpected step waveform	Depoplate C680	X00
19	16	VGA Board	9/04/2002	Compal	VGA no reference voltage detected	Poplate R124	X00
20	45	1.5V / 1.05V	9/05/2002	Compal	SUSPWROK_1P5V control signal detected glitch issue	Add PR767 and reserved PR742 to NP	X00
21	46	1.25V / 2.5V	9/05/2002	Compal	SUSPWROK_1P5V control signal detected glitch issue	Add PR768 and reserved PR605 to NP	X00
22	40	Power Control	9/26/2002	Dell	Fixes the 3VSRC to 3VRUN leakage problem	Change R603 to 22Ω	X01
23	40	Power Control	9/26/2002	Dell	We need a Soft Start feature	Add C680 to 0.1uF	X01
24	20	ICH4-M	9/26/2002	Dell	Change Board Rev resistor to X01	Depopp R287, and Pop R286	X01
25	45	1.5V / 1.05V	9/26/2002	Dell	Add 0 ohm resistor at PU18 pin 15 and pin 16	Add PR769 and PR770 to 0Ω	X01
26	46	1.25V / 2.5V	9/26/2002	Dell	Add a 0 Ohm resistor at PU11 pin 15	Add PR771 to 0Ω	X01

Version Change List (P. I. R. List)

Item	Page#	Title	Date	Request Owner	Issue Description	Solution Description	Rev.
27	28	NIC high po issue	10/17/2002	DELL	High po test fail because RN1 pitch too close	change RN1 to R785~r788 to enlarge the pitch	X01
28	26	Add PD for BT	10/17/2002	DELL	leverage from LK	Add R789 10K PD to COEX1_BT_ACTIVE	X01
29	25	Dog h power rating	10/17/2002	Compal	The current rating of MOS and Bead is too small in Dog house	change Q1,F1,F2,L25 part to meet Doghouse power current requirement (F1&F2 create new symbol now)	X01
30	13	Fan soft start	10/17/2002	Compal	No soft start will cause +5VRUN droop low	change C127 and C110 pop(don't do it per Bo's command)	X01
31	22	cd audio pull down	10/18/2002	Compal	when we don't plug in CDrom, audio trace will floating	add R, R to tie the INT_CD_L/R ground	X01
32	22	reserve series ATA	10/18/2002	DELL	change some power/gnd to NC for reserve series ATA interface for module bay	change JMOD1pin8,10,14,16,9,11, to NC,conecct SATA_DET# to pin13	X01
33	20,22,34	add SATA detect	10/18/2002	DELL	Add series ATA detect in module bay	Add net sdat_det# from module bay to EC and remove original sio_lid_ec#	X01
34	31	change MINI PCI pin NC	10/18/2002	DELL	change MINI-PCI pin NC (No use)	Change JPCI pin109 and pin 123 to NC and remove R457,C576	X01
35	22	cr_ref return cap.	10/18/2002	DELL	add a pull down cap. for cd_ref near JMOD	Add C from CD_REF to gnd near JMOD and let it unpop	X01
36	29	Reserve PCMCIA suspend pin	10/18/2002	DELL	Reserve PCMCIA suspend pin not use	depop D11 and reserve it for TI_SUSPEND#	X01
37	40	Power Q-SW	10/18/2002	DELL	Lindberg change Q12,Q55,Q77 to big rating, we will wait the EA report and make a decision	TBD	X01
38	38	Add 1.8V PWRGD	10/18/2002	DELL	Add the 1.8V power good to power sequence	change the U12 pin 13 from RUN_ON to 1P8V_PWRGD	X01
40	25,34	change DH enable	10/22/2002	DELL	change dog house power enable pin independent	Add R and R seprate the control signal of DH	X01
41	10	change to normal part	10/22/2002	Compal	change to vender normal specification part	change C743 and C744 from 50V to 16V rating	X01
42	31	remove pin of MINI-PCI	10/24/2002	DELL	change pin def. of MINI-PCI	romove pin 118, 120 ground for JPCI	X01
43	42	remove some PS_ID	10/24/2002	DELL	remove some reserve PS_ID component	Remove PQ32, PR77, PR74, PR73	X01
44	26,31	duplicate pull down	10/24/2002	DELL	remove duplicate pull down	Remove R789 , only use R767	X01
45	29	remove not use part	10/24/2002	DELL	remove the reserve part for carrbus controller	Delete R185	X01
46	38	change the thermaltrip	10/24/2002	DELL	change the thermal shut down solution from MAX to discrete	del U6, R30, R24, add U2, C29, R28, R20~R23, C27, R53, C65	X01
47	28	ESD Safty issue	10/24/2002	Compal	JPH_RJ layout change connection from GND to NC.	JPH_RJ pin 6 change connection from GND to NC.	X01
48	40	+3VRUN, +3VSUS FET ISSUE	10/25/2002	DELL	+3VSUS AND +3VRUN POWER RAIL MOSFET PARTS CHANGED	Q12 AND Q77 CHANGE PARTS FROM SI3456 TO SI4810	X01
49	33	RGB Beads value changed	10/25/2002	DELL	Using 0Ω instead of beads	Change the value of L101, L102, L103, L14, L15, L16, L17, L18	X01
50	33	Rev. changed	10/25/2002	Compal	PI3L301A revision change to PI3L301BA	U30 Rev. changed	X01
51	25	Dog House	10/29/2002	DELL	Must Design as Lindberg	R25 changed value to 100K and R26 (10K) change to C940 (0.022u_0805)	X01
52	9,12,15	Bulk Cap.	10/29/2002	Compal	Height Restriction	Changed Height limit of C933,C934,C731,C779,C788,C789 to 1.9mm	X01
53	9	CPU Bypass	10/29/2002	DELL	Changed Voltage Limit of Bulk Cap. to 2V	C671~C675,C678 Changed Voltage Limit to 2V	X01

DELL CONFIDENTIAL/PROPRIETARY

Version Change List (P. I. R. List)

Item	Page#	Title	Date	Request Owner	Issue Description	Solution Description	Rev.
54	41	PAD & ME Parts	10/30/2002	Compal	Need to BLOW OUT 2.5mm Radius from Vias used to transition Tip and Ring from InnerLayer 4 to Bottom layer	Deleted H43 to meet 2.5mm Radius gap	X01
55	28	Magnetic & RJ45	10/30/2002	DELL	LAN Analog Switch (PI3L301BA) serial Resistors change type to Inductors	R776~R783 changed value from 0Ω to 15nH Inductor (TDK MLK1005S15NJ)	X01
56	27	POP option to 5705	11/08/2002	Compal	change the POP option from 5702 to 5705	Depop L66, C344, C324 Pop R217, R549	X01
57	38	Thermal shut down to 6509	11/08/2002	DELL	change the thermal shut down solution from discrete to MAX	Add U6, R30, R24 Depop U2, C29, R28, R20~R23, C27, R53, C65	X01
58	27	LOM	11/27/2002	Compal	Depop dummy parts	Depop R388 (10K_0402) and C390 (0.01U_0402)	X02
59	41	PAD, ME, SPARE PARTS	11/27/2002	Compal	Add Cost-BOM parts	Add Z1(Switch-FPC), Z2(Touch_pad-FPC), Z3(MDC-Cable), Z4(Spk-mODULE), Z5(BT_Cable).	X02
60	9	Vcore Bypass CAP.	11/29/2002	Compal	Vcore by pass capacitors adjust for cost	Add C941~C944 (220UF_2V) Depop C671~C675, C678 (220UF_2V)	X02
61	40	Power Control	11/29/2002	Compal	package change for increase voltage tolerance	C680 changed package from 0402 to 0603	X02
62	20	ICH4	12/02/2002	Compal	Depop dummy part	Depop R529 (10K_0402)	X02
63	25	Dog House	12/04/2002	Compal	package change for conponent easy to buy	C940 changed package from 0805 to 0603	X02
64	30	Smart Card	12/11/2002	DELL	Need to implement 5 Smart Card changes.	Add R12, R26, C184 , C189 , Change C171 value from 390P to 470P	X02
65	27	BCM5705 By Pass	12/11/2002	DELL	Need to change package from 0805(4.7UF) to 1206(10UF) for cost	C339, C346, C352, C355, C393, C662, C368, C342	X02
66	All Pages	Page Symbol	12/13/2002	DELL	Put "DELL CONFIDENTIAL/PROPRIETARY" on Schematics	DELL CONFIDENTIAL/PROPRIETARY	X02
67	20	ICH4	12/13/2002	Compal	Delay Thermtrip to ICH4 so Intruder have time to get latch	Add C46 (0.1UF_0402)	X02
68	38	Thermtrip	12/17/2002	DELL	For Charger Selector Used (SIO_THERM_PWRDN net changed to SBAT_LOW)	Delete R206 & Q22	X02
69	27	BCM5705	12/17/2002	DELL	Delete 4401 Conponents	Delete U43, R388, C390, R367, R368	X02
70	28	LAN Transformer	12/17/2002	DELL	Delete 4401 Conponents	Delete R551 ~ R554	X02
71	28	LAN Transformer	12/18/2002	DELL	Changed Spec 2KV to 3KV	C1	X02
72	17	TV OUT	12/18/2002	DELL	Depop C14 for Cost	Depop C14	X02
73	33	DOCKING CONN.	12/18/2002	DELL	Remove RGB Bead	Delete L101, L102, L103, L14 ~ L18 & Trace	X02
74	23	AC,97 CODEC	12/18/2002	Compal	Added Resistors for TPS793475 LDO	Add R792, R793 (@)	X02
75	23	AC,97 CODEC	12/18/2002	DELL	Change the Value from 0 ohm to 1UF_0805	C636	X02
76	17	TV OUT	12/18/2002	DELL	Change RGB Bead Value & Package	Changed L5, L104, L105	X02
77	35	SIO	12/18/2002	Compal	ESD Cap is Needed on Reset to McCallen	Add D74 for ESD (@)	X02
78	30	Smart Card	12/19/2002	DELL	Added Cap (4.7uF_0805) for SCR_VCC_C to Depop	Add C945 for depop (@)	X02
79	17	TV OUT	12/19/2002	Compal	Depop C10, C11, C661 for RGB Signals	Depop C10, C11, C661(@)	X02

Version Change List (P. I. R. List)

Item	Page#	Title	Date	Request Owner	Issue Description	Solution Description	Rev.
80	40	Power Control	12/19/2002	Dell	Change ALW_ENABLE# control methos through OR gate	Added R794, R795, R796	X02
81	38	Thermtrip	12/19/2002	Dell	THERM_PWRDN add RC delay	Added R798, C946	X02
82	26	MDC, BT	12/19/2002	Dell	Pop JPT pin 7 resistor	Added R765	X02
83	35	SIO	12/19/2002	Dell	SBAT_LOW pull-up through 4.7K resistor	Added R797	X02
84	24	Phone JACK	12/20/2002	Dell	R252 to be connected to EXT_MIC_PLUG instead of EXTMIC_PLUG	R252	X02
85	24	Phone JACK	12/20/2002	Dell	add a 100PF cap to GND on Sheet 24 on the EXTMIC_PLUG so that signal is terminated as well for protection purposes	Added C947	X02
86	35	SIO	12/20/2002	Compal	To prevent ACAV from leaking Current for OTP event	Added R799, R800 & ACAV through AND gate	X02
87	20	ICH4M	12/20/2002	Dell	Board ID X02	Pop R278, R287 & Depop R279, R286	X02
88	35	SIO	12/20/2002	Dell	Add Battery Selector Circuit	U27.H13 netname changed to SBAT_LOW	X02
89	28	Magantic	12/21/2002	Dell	Change Magantic vendor to Transpower	L24 (GB1G04-T)	X02
90	19	ICH4	01/02/2003	Compal	Change RTC 32.768KHz Crystal to 10ppm	X5	X02
91	09,12,15	CPU,Odem,DDR bypass	01/03/2003	Dell	Reduce Component Hight from 3.1mm to 2.8mm	C78, C796, C910, C935, C936	X02
92	19	ICH4	01/07/2003	Compal	Change Cap Value from 15pF to 12pF to Improve Frequency Tolerance	C581, C586	X02
93	21	ICH4	01/07/2003	Dell	Change Cap Height Dimension for placing Height Restriction Area	C585	X02
94	20	ICH4	01/20/2003	Dell	Change Board ID to X03	Pop R286 Depop R287	X03
95	39	JLID	01/20/2003	Compal	Change for Switch-Board EMI solution	Depop R214	X03
96	35	SIO	01/22/2003	Compal	Change Footprint for ESD	D74 (@)	X03
97	27	LOM	01/30/2003	Dell	Change Resister Value for RDAC	R318 (1.18K)	X03
98	38	Thermtrip	01/30/2003	Dell	Change Trip Temperature Point to 86 C for OTP	R24 (22.6K)	X03
99	28	Magantic	01/30/2003	Compal	Added Pull Down Resister to prevent LOM LED from doing abnormal behavior.	Added R400, R401, R402	X03
100	17	TV-Out / CRT	02/06/2003	Dell	CRT H/V sync Need to NO-POP	Depop R6, R16	X03
101	25	USB 2.0	02/06/2003	Dell	Reduce Component Hight from 3.1mm to 2.8mm	C300, C304, C329	X03
102	27	LOM	01/30/2003	Dell	Back to The Original Resister Value for RDAC	R318 (1.15K)	X03
103	38	Thermtrip	02/12/2003	Dell	Change Trip Temperature Point to 84.5 Degree C for OTP	R24 (24K)	X03

DELL CONFIDENTIAL/PROPRIETARY

Version Change List (P. I. R. List) for Power Circuit

Item	Page#	Title	Date	Request Owner	Issue Description	Solution Description	Rev.
1	42	Power DC-IN	8/20/2002	Dell	Change PQ32, PR73, PR74, PR77 to NP	R318 change the value from 1240Ω to 1140Ω	X00
2	44	1.8V / 1.2V	8/29/2002	Compal	Change the control signal of 1.2VRUN from RUN_ON to RUNPWROK	Change netname from 4401_CLOCKRUN to 7705M_CLOCKRUN	X00
3	47	Vcc_core	9/03/2002	Dell	Banias update PBOOT voltage spec with 1.2V	Change PR755 to 16.5K and PR757 to 15K	X00
4	45	1.5V / 1.05V	9/05/2002	Compal	SUSPWROK_1P5V control signal detected glitch issue	Add PR767 and reserved PR742 to NP	X00
5	46	1.25V / 2.5V	9/05/2002	Compal	SUSPWROK_1P5V control signal detected glitch issue	Add PR768 and reserved PR605 to NP	X00
6	45	1.5V / 1.05V	9/26/2002	Dell	Add 0 ohm resistor at PU18 pin 15 and pin 16	Add PR769 and PR770 to 0Ω	X01
7	46	1.25V / 2.5V	9/26/2002	Dell	Add a 0 Ohm resistor at PU11 pin 15	Add PR771 to 0Ω	X01
8	45	1.5V / 1.05V	10/17/2002	Compal	Turn off have glitch because +3VSUS issue, so pull high to +5VSUS can improved	Add PR780 to 10KΩ	X01
9	45	1.5V / 1.05V	10/17/2002	Compal	Intersil Issue can solved by Fairchild solution Change the control signal of 1.05VSUS from RUNPWROK to SUSPWROK_5V	Add PR772, PR773 and change PC282 to 0.01U_0805 size	X01
10	44	1.8V / 1.2V	10/17/2002	Dell	Change the 1.8VRUN Regulator from CM3718 to MAX1927	Change +1.8V Regulator	X01
11	45	1.5V / 1.05V	10/17/2002	Dell	+1.5VSUS POWER GOOD ISSUE	change PL124 to 5.0U_20%_3.0A to 4.7U_20%_3.9A	X01
12	44-48	All Regulaters	10/17/2002	Dell	Add test point for DELL testing	Add PR778, PR783, PR784, PR781, PR782, PR785, PR786 to NP for Test point	X01
13	49	Battery charger	10/23/2002	Dell	Fast Charger for short time and Cost-Down	Add P303 and Change PC202, PC203, PC204, PC211, PC212, PC213 to 10U_1210 and Delete PU15's circuit Change PR636 to 43.2K ohms for 65W Adpater plug in	X01
14	45	1.5V / 1.05V	10/23/2002	Dell	Change OCSETt and SEN Resistor	change PR735, PR736 to 75K ohms, Change PR727 to 330 ohms, Change PR728 to 634 ohms	X01
15	47	Vcc_core	10/28/2002	Dell	Cost-Down and change deepsleep offset	Change PR744, PC243, PC251, PC252, PR765 For adjusts slope and sleep offset PQ7, PQ11, PD24, PD27 to NP for Cost-Down	X01
16	47	Vcc_core	10/28/2002	Dell	EMI Broad band ISSUE	Add PC304 PC306 to 0.1U, Add PC305 PC307 to 2200P change PR747 PR756 to 3.3 ohms	X01
17	50	PWR_Selector	11/14/2002	Compal	Charger selector ISSUE	Add PR649, Del PD48,Change PD49 PD51 to B540C and Change PR657 PR662 to 33K	X02
18	42	Power DC-IN	11/20/2002	Dell	AC-IN Detect Issue	Change PR70 to 4.7K	X02
19	49	Battery charger	11/26/2002	Dell	Charger Current to 5.3A	Change PR627 to 28m ohms	X02

DELL CONFIDENTIAL/PROPRIETARY

Version Change List (P. I. R. List) for Power Circuit

Item	Page#	Title	Date	Request Owner	Issue Description	Solution Description	Rev.
20	47	Vcc_core	11/29/2002	Compal	Delete V-core Cap for Cost-Down	Delete PC232 PC233 PC246 PC247 for Cost-Down	X02
21	50	PWR_Selector	12/16/2002	Dell	New Battery selector switch design to sopport secondry battery discharge before primary	Delete PQ72, PQ73 Change PQ86 to Dual-Mosfet ,Add PQ88 Mosfet Add PU19, PC308, PC309, U20B, PQ89, PQ90, PD57 And PR787, PR788, PR789, PR790, PR791, PR792, PR793 PR794, PR795@, PR796, PR797, PR798, PR799, PR800	X02
22	42	Power DC-IN	12/17/2002	Dell	EFT Issue and Dell request	Add PQ91, PD58 PR762 to depop	X02
23	42	Power DC-IN	12/18/2002	Compal	EFT Issue	Add PR801 to depop	X02
24	42	Power DC-IN	12/19/2002	Dell	Added PS_ID Pull-up	Add PR802 (4.7K_0402)@	X02
25	42	Power DC-IN	12/19/2002	Dell	Added +DC_IN 10K_0805 Pull-down to GND to solve potential adapter insertion secqurncing issue	Add PR803 (10K_0805)	X02
26	49	Chaqrger	12/20/2002	Dell	Added mΩ resistor in palleal with PR627 to support 6.0Amp maximun charging current	Add PR804 0.05mΩ_2512)	X02
27	49	Chaqrger	12/20/2002	Dell	Changed the Value of PR627 from 0.028 to 0.05	PR627 chande to 50m ohms	X02
28	44	1.8V / 1.2V	12/20/2002	Compal	Prevent 3.3ALW voltage droop during OTP & ThermTrip shutdown	Added PU20 (@)	X02
29	49	Chaqrger	12/20/2002	Dell	Changed the Value of PL120 from 6.0U to 5.6U	PL120 chande to 5.6UH_+-20%_8.8A	X02
30	42	Power DC-IN	12/20/2002	Dell	Prevent Bondi PS_ID Pin Issue	Add PR762 and PQ91@	X02
31	42	Power DC-IN	12/31/2002	Compal	Change SI4435 to SI4825 to Increase Design Margin	PQ1	X02
32	42	Power DC-IN	01/22/2003	Dell	Prevent Bondi PS_ID Pin Issue	Pop PQ91, PR802 Depop PR762	X03
33	42	Power DC-IN	01/22/2003	Compal	Change Footprint	PD58	X03
34	45	1.5V / 1.05V	01/30/2003	Dell	ISL6225B swing issue	Change PU11, PU18 to ISL6225CA & PC285 to 330uF_2.5V_15mΩ Depop PR730, Pop PR734 to 0Ω	X03

DELL CONFIDENTIAL/PROPRIETARY