Compal Confidential

Model Name : ZIUS6/S7
File Name : LA-A321PR01
BOM P/N:4319OP38L5x -- ZIUS7
4319OP38L0x -- ZIUS6

# Compal Confidential

## ZIUS6/S7 M/B Schematics Document

### Intel SharyBay ULT Processor + AMD SUN Pro

2013-03-14

REV:0.2

| Security Classification | Compal Secret Data | | | Compal Electronics, Inc. |
|---|---|---|---|---|
| Issued Date | 2011/06/24 | Deciphered Date | 2012/07/12 | Title: Cover Page |

THIS SHEET OF ENGINEERING DRAWING IS THE PROPRIETARY PROPERTY OF COMPAL ELECTRONICS, INC. AND CONTAINS CONFIDENTIAL AND TRADE SECRET INFORMATION. THIS SHEET MAY NOT BE TRANSFERED FROM THE CUSTODY OF THE COMPETENT DIVISION OF R&D DEPARTMENT EXCEPT AS AUTHORIZED BY COMPAL ELECTRONICS, INC. NEITHER THIS SHEET NOR THE INFORMATION IT CONTAINS MAY BE USED BY OR DISCLOSED TO ANY THIRD PARTY WITHOUT PRIOR WRITTEN CONSENT OF COMPAL ELECTRONICS, INC.

| Size | Document Number | Rev |
|---|---|---|
| Custom | LA-A321PR02 | 0.2 |

Date: Thursday, March 14, 2013 Sheet 1 of 46

Compal confidential
File Name :ZIUS6/ZIUS7

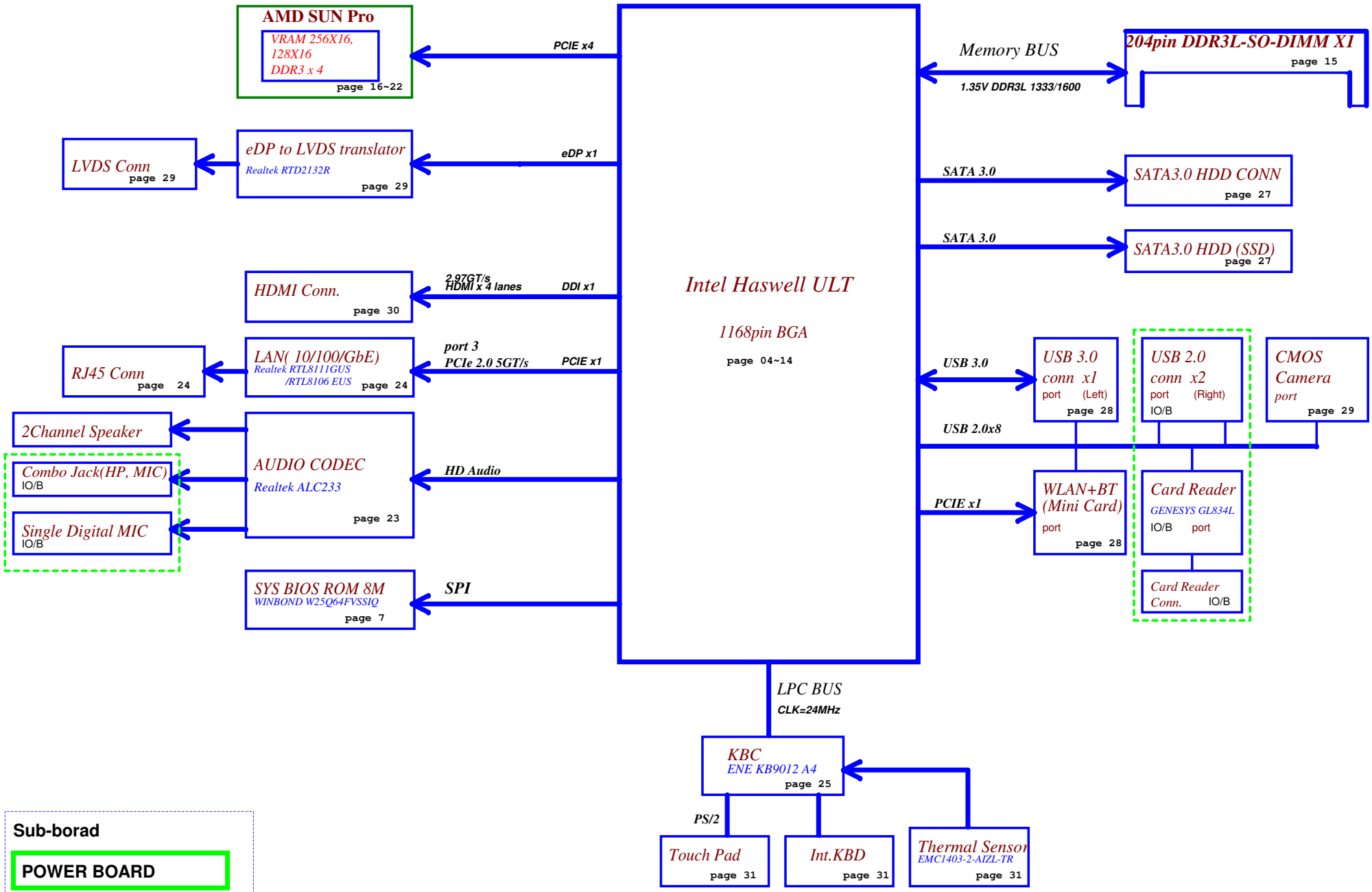


| Security Classification | Compal Secret Data | | |
|---|---|---|---|
| Issued Date | 2011/07/21 | Deciphered Date | 2012/12/31 |

THIS SHEET OF ENGINEERING DRAWING IS THE PROPRIETARY PROPERTY OF COMPAL ELECTRONICS, INC. AND CONTAINS CONFIDENTIAL AND TRADE SECRET INFORMATION. THIS SHEET MAY NOT BE TRANSFERED FROM THE CUSTODY OF THE COMPETENT DIVISION OF R&D DEPARTMENT EXCEPT AS AUTHORIZED BY COMPAL ELECTRONICS, INC. NEITHER THIS SHEET NOR THE INFORMATION IT CONTAINS MAY BE USED BY OR DISCLOSED TO ANY THIRD PARTY WITHOUT PRIOR WRITTEN CONSENT OF COMPAL ELECTRONICS, INC.

**Compal Electronics, Inc.**

Title: **MB Block Diagram**

Size: Custom | Document Number | Rev 0.2

Date: Thursday, March 14, 2013 | Sheet 2 of 46

## Voltage Rails

| power plane / State | B+ | +5VALW<br>+3VALW | +1.35V | +5VS<br>+3VS<br>+1.5VS<br>+1.05VS_VTT<br>+CPU_CORE<br>+0.675VS<br>+VGA_CORE(PX)<br>+0.95VS_VGA(PX)<br>+3.3VS_VGA(PX)<br>+1.8VS_VGA(PX)<br>+1.5VS_VGA(PX) |
|---|---|---|---|---|
| S0 | O | O | O | O |
| S3 | O | O | O | X |
| S5 S4/AC | O | O | X | X |
| S5 S4/ Battery only | X | X | X | X |
| S5 S4/AC & Battery don't exist | X | X | X | X |

| STATE \ SIGNAL | SLP_S0# | SLP_S3# | SLP_S4# | SLP_S5# | +VALW | +V | +VS | Clock |
|---|---|---|---|---|---|---|---|---|
| Full ON | HIGH | HIGH | HIGH | HIGH | ON | ON | ON | ON |
| S3 (Suspend to RAM) | LOW | LOW | HIGH | HIGH | ON | ON | OFF | OFF |
| S4 (Suspend to Disk) | LOW | LOW | LOW | HIGH | ON | OFF | OFF | OFF |
| S5 (Soft OFF) | LOW | LOW | LOW | LOW | ON | OFF | OFF | OFF |

## BOM Structure Table

| BTO Item | BOM Structure |
|---|---|
| Connector | ME@ |
| 45 LEVEL | 45@ |
| Unpop | @ |
| CPU OPTION | CPU1@ |
| INTEL UMA | UMA@ |
| AMD SUN Pro | PX@ |
| VRAM Option | S1G@ M1G@ H1G@<br>S2G@ M2G@ |
| LAN RTL8111GUS | 8111@ SWR@ |
| LAN RTL8106EUS | 8106@ SWR@ |
| USB3.0 | USB3@ |
| EMI PART | EMI@ |
| ESD PART | ESD@ |
| | |
| | |
| | |
| | |
| | |

## BOARD ID Table

| Board ID | PCB Revision |
|---|---|
| 0 | |
| 1 | |
| 2 | 0.2 |
| 3 | 0.1 |
| 4 | |
| 5 | |
| 6 | |
| 7 | |

## USB 2.0 Port Table

| | USB 2.0 | Port | 3 External USB Port |
|---|---|---|---|
| | | 0 | USB 2.0 Port (I/O Board) |
| | | 1 | USB 3.0/2.0 Port (MB) |
| | | 2 | USB 2.0 Port (I/O Board) |
| | | 3 | Card Reader |
| | | 4 | Touch Screen (reserve) |
| | | 5 | Camera |
| | | 6 | Mini Card (WLAN/BT) |
| | | 7 | |

## USB 3.0 Port Table

| Port | |
|---|---|
| 1 | |
| 2 | USB 3.0 Port (MB) |
| 3 | |
| 4 | |

## PCIE Port Table

| Port | Lane | |
|---|---|---|
| 1 | | |
| 2 | | LAN |
| 3 | | WLAN |
| 4 | | |
| 5 | 0 | GPU |
| | 1 | |
| | 2 | |
| | 3 | |
| 6 | 0 | |
| | 1 | |
| | 2 | |
| | 3 | |

## SATA Port Table

| Port | |
|---|---|
| 3 | |
| 2 | |
| 1 | mSATA SSD |
| 0 | HDD |

## EC SM Bus1 address

| Device | Address |
|---|---|
| Smart Battery<br>Charger | |

## EC SM Bus2 address

| Device | Address |
|---|---|
| Thermal Sensor EMC1403-2-AIZL-TR<br>Panel - eDP to LVDS translator<br>SharkBay ULT<br>AMD SUN Pro | 1001_101xb |

## CPU SM Bus address

| Device | Address |
|---|---|
| DDR DIMM0<br>WALN<br>Touch Pad | 0XA0 |

## CPU SML0 Bus address

| Device | Address |
|---|---|

## CPU part

U1 CPU1@ I5_3317U 1.7G SA00006FY20
U1 CPU2@ I3-4010U 1.7G SA00006SX20
U1 CPU3@ I3-4100U 1.8G SA00006SU20
U1 CPU4@ I5-4250U 1.3G SA00006NM40
U1 CPU5@ I5-4200U 1.6G SA00006SM20
U1 CPU6@ I7-4550U 1.5G SA00006SJ30
U1 CPU7@ I7-4500U 1.8G SA00006SL20

V0.2

## SMBUS Control Table

| | HOST | VGA | BATT | KB9012 | SODIMM | WLAN | PANEL sensor ADM1032 | Thermal sensor EMC1403 | VGA sensor ADM1032 | CPU Sensor | Touch Pad | Security ROM | NFC |
|---|---|---|---|---|---|---|---|---|---|---|---|---|---|
| EC_SMB_CK1<br>EC_SMB_DA1 | KB9012<br>+3VLP | X | V<br>+3VLP | X | X | X | X | X | X | X | X | X | X |
| EC_SMB_CK2<br>EC_SMB_DA2 | KB9012<br>+3VS | V<br>+3VS | X | X | X | X | V<br>+3VS | V<br>+3VS | V<br>+3VS | V<br>+3VALW | X | X | X |
| SMBCLK<br>SMBDATA | CPU<br>+3VALW | X | X | X | V<br>+3VS | V<br>+3VS | X | X | X | X | V<br>+3VS | V<br>+3VS | V<br>+3VS |
| SML0CLK<br>SML0DATA | CPU<br>+3VALW | X | X | X | X | X | X | X | X | X | X | X | X |
| SML1CLK<br>SML1DATA | KB9012<br>+3VS | X | X | V<br>+3VS | X | X | X | X | X | V<br>+3VALW | X | X | X |

## PCB part

ZZZ5 PCB 0R LA-A321P REV0 M/B DA600104000

## VRAM

ZZZ3 Samsung S2G@ X7641338L34 K4W4G1646B-HC11
ZZZ7 MICRON M2G@ X7641338L35 MT41K256M16HA-107G:E
ZZZ6 Samsung S1G@ X7641338L31 K4W2G1646E-BC1A
ZZZ4 MICRON M1G@ X7641338L32 MT41J128M16JT-093G:K
ZZZ8 Hunix H1G@ X7641338L33 Hynix 128x16 Vram H5TC2G63FFR-11C

| Security Classification | Compal Secret Data | | |
|---|---|---|---|
| Issued Date | 2011/07/12 | Deciphered Date | 2012/07/01 |

THIS SHEET OF ENGINEERING DRAWING IS THE PROPRIETARY PROPERTY OF COMPAL ELECTRONICS, INC. AND CONTAINS CONFIDENTIAL AND TRADE SECRET INFORMATION. THIS SHEET MAY NOT BE TRANSFERED FROM THE CUSTODY OF THE COMPETENT DIVISION OF R&D DEPARTMENT EXCEPT AS AUTHORIZED BY COMPAL ELECTRONICS, INC. NEITHER THIS SHEET NOR THE INFORMATION IT CONTAINS MAY BE USED BY OR DISCLOSED TO ANY THIRD PARTY WITHOUT PRIOR WRITTEN CONSENT OF COMPAL ELECTRONICS, INC.

Compal Electronics, Inc.

Title: Notes List

Size: Custom | Document Number: LA-A321PR02 | Rev: 0.2

Date: Thursday, March 14, 2013 | Sheet 3 of 46

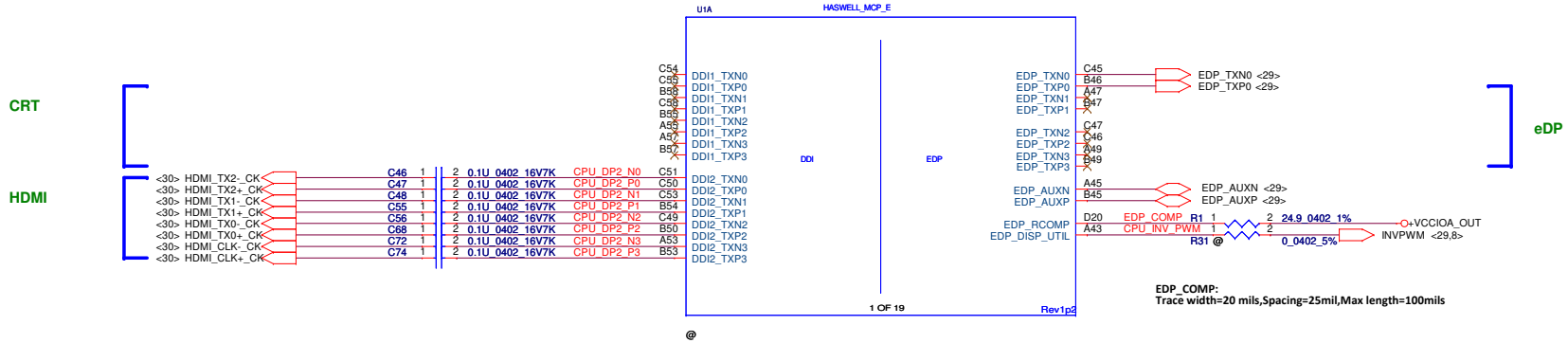


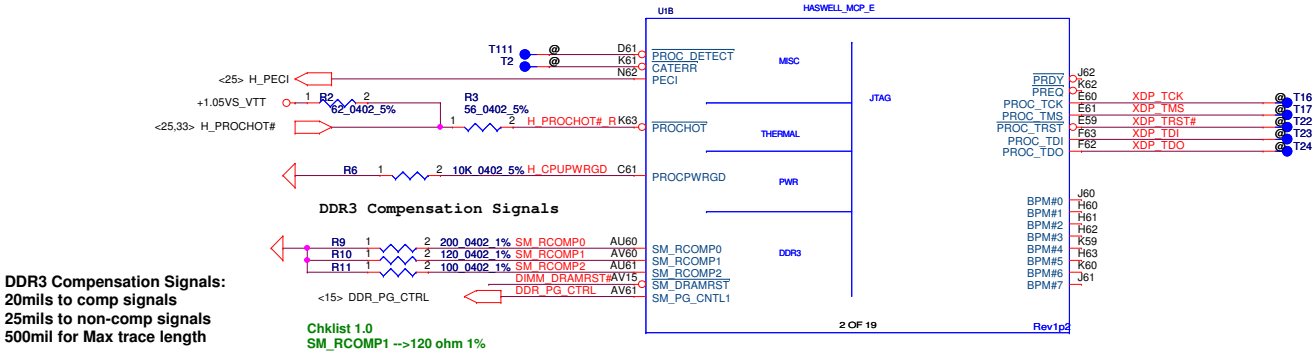


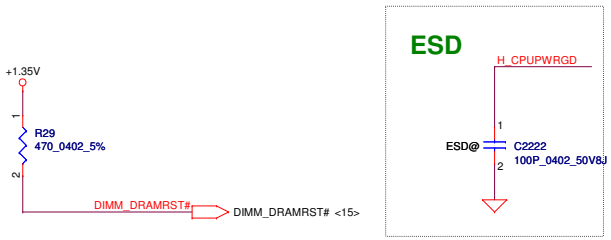


| Security Classification | Compal Secret Data | | | Compal Electronics, Inc. |
|---|---|---|---|---|
| Issued Date | 2011/12/13 | Deciphered Date | 2012/12/13 | Title: HSW MCP(1/11) DDI,MSIC,XDP |
| THIS SHEET OF ENGINEERING DRAWING IS THE PROPRIETARY PROPERTY OF COMPAL ELECTRONICS, INC. AND CONTAINS CONFIDENTIAL AND TRADE SECRET INFORMATION. THIS SHEET MAY NOT BE TRANSFERED FROM THE CUSTODY OF THE COMPETENT DIVISION OF R&D DEPARTMENT EXCEPT AS AUTHORIZED BY COMPAL ELECTRONICS, INC. NEITHER THIS SHEET NOR THE INFORMATION IT CONTAINS MAY BE USED BY OR DISCLOSED TO ANY THIRD PARTY WITHOUT PRIOR WRITTEN CONSENT OF COMPAL ELECTRONICS, INC. | | | | Size: Custom; Document Number: LA-A321PR02; Rev: 0.2 |
| | | | | Date: Thursday, March 14, 2013; Sheet 4 of 46 |

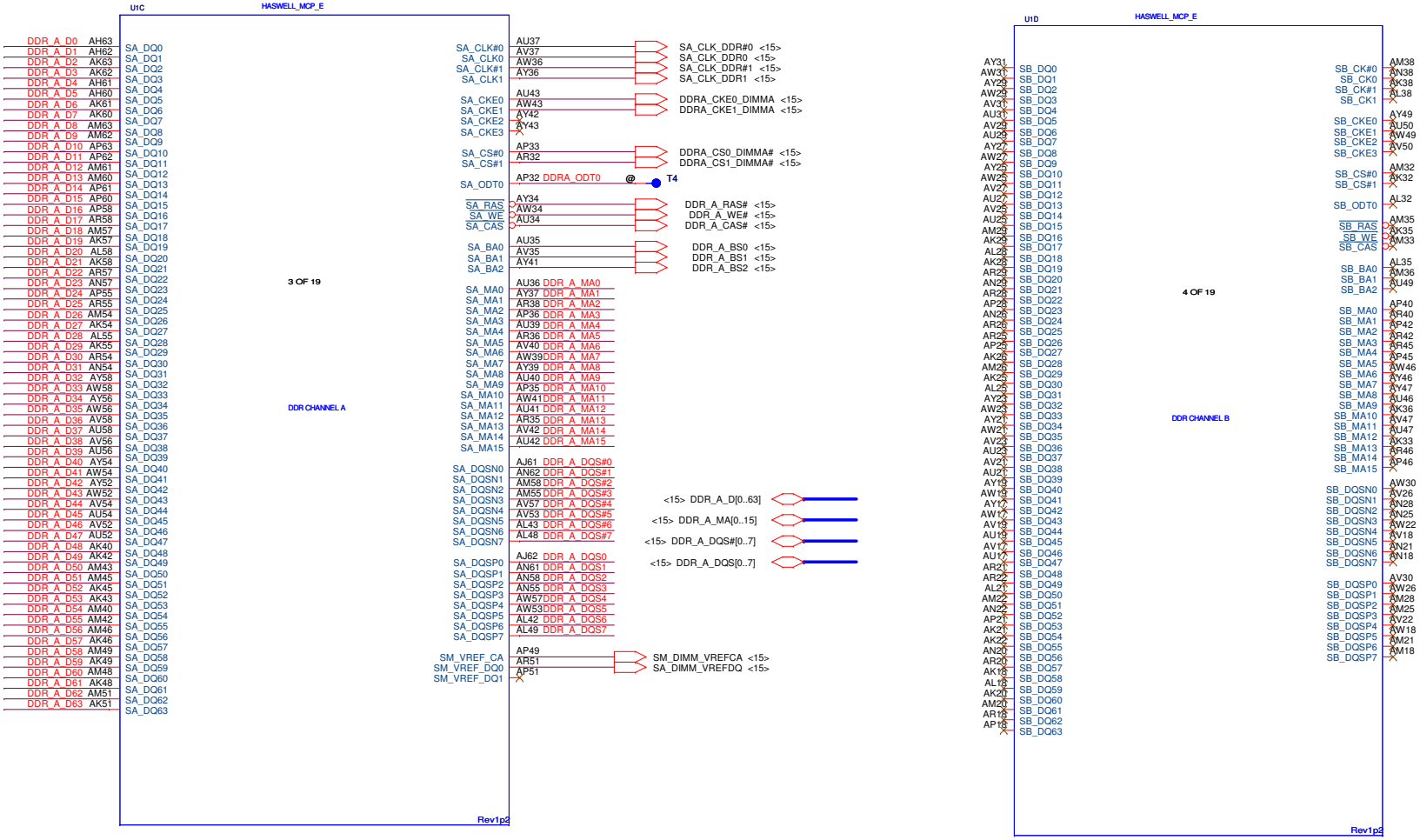


| Security Classification | Compal Secret Data | | | Compal Electronics, Inc. |
|---|---|---|---|---|
| Issued Date | 2011/12/13 | Deciphered Date | 2012/12/13 | Title: HSW MCP(2/11) DDRIII |
| THIS SHEET OF ENGINEERING DRAWING IS THE PROPRIETARY PROPERTY OF COMPAL ELECTRONICS, INC. AND CONTAINS CONFIDENTIAL AND TRADE SECRET INFORMATION. THIS SHEET MAY NOT BE TRANSFERED FROM THE CUSTODY OF THE COMPETENT DIVISION OF R&D DEPARTMENT EXCEPT AS AUTHORIZED BY COMPAL ELECTRONICS, INC. NEITHER THIS SHEET NOR THE INFORMATION IT CONTAINS MAY BE USED BY OR DISCLOSED TO ANY THIRD PARTY WITHOUT PRIOR WRITTEN CONSENT OF COMPAL ELECTRONICS, INC. | | | | Size: Custom; Document Number: LA-A321PR02; Rev: 0.2 |
| | | | | Date: Thursday, March 14, 2013; Sheet 5 of 46 |

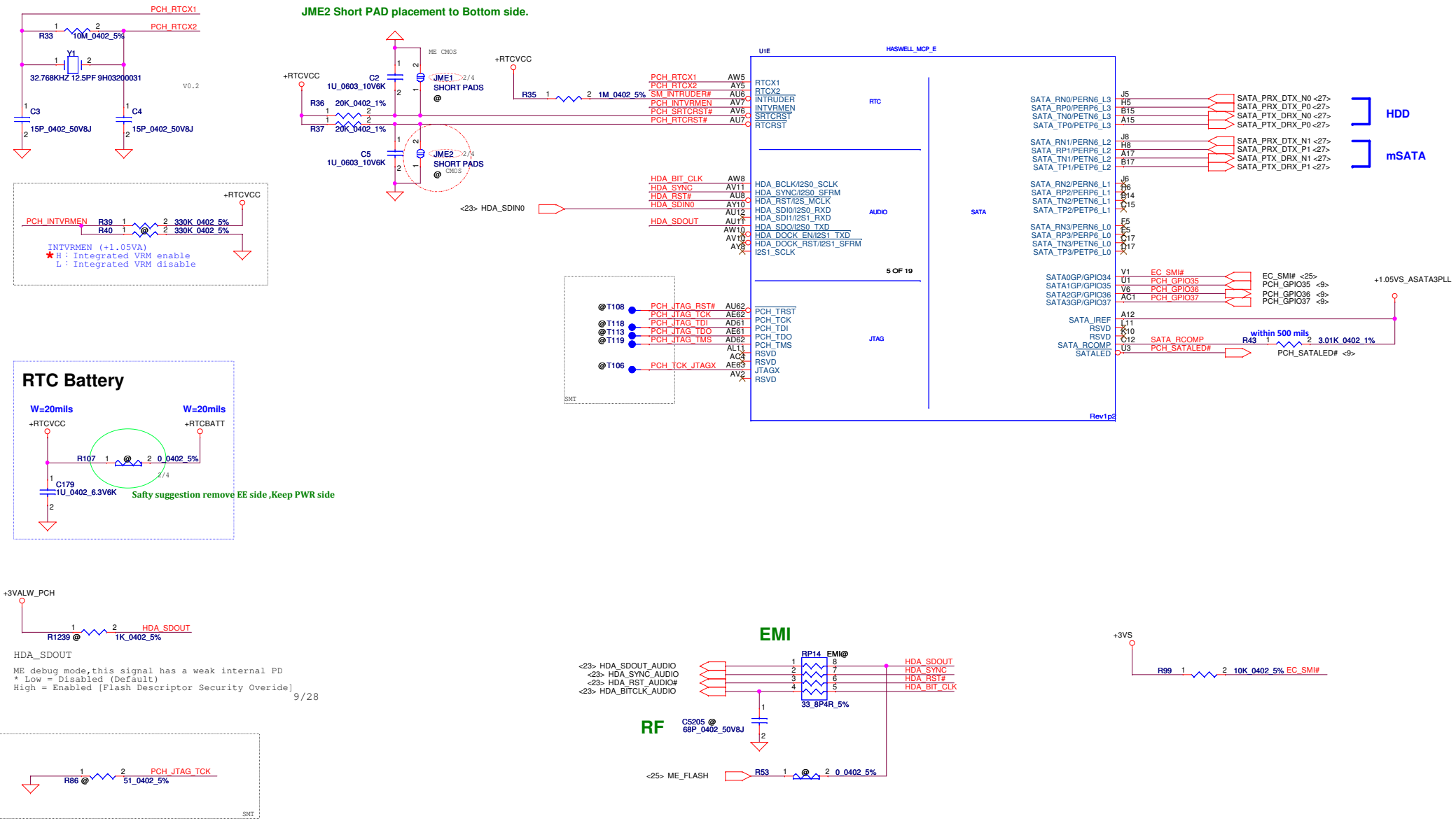


| Security Classification | Compal Secret Data | | |
|---|---|---|---|
| Issued Date | 2011/12/13 | Deciphered Date | 2012/12/13 |

THIS SHEET OF ENGINEERING DRAWING IS THE PROPRIETARY PROPERTY OF COMPAL ELECTRONICS, INC. AND CONTAINS CONFIDENTIAL AND TRADE SECRET INFORMATION. THIS SHEET MAY NOT BE TRANSFERED FROM THE CUSTODY OF THE COMPETENT DIVISION OF R&D DEPARTMENT EXCEPT AS AUTHORIZED BY COMPAL ELECTRONICS, INC. NEITHER THIS SHEET NOR THE INFORMATION IT CONTAINS MAY BE USED BY OR DISCLOSED TO ANY THIRD PARTY WITHOUT PRIOR WRITTEN CONSENT OF COMPAL ELECTRONICS, INC.

Compal Electronics, Inc.

Title: HSW MCP(3/11) RTC,SATA,XDP

Size: Custom | Document Number: LA-A321PR02 | Rev: 0.2

Date: Thursday, March 14, 2013 | Sheet 6 of 46

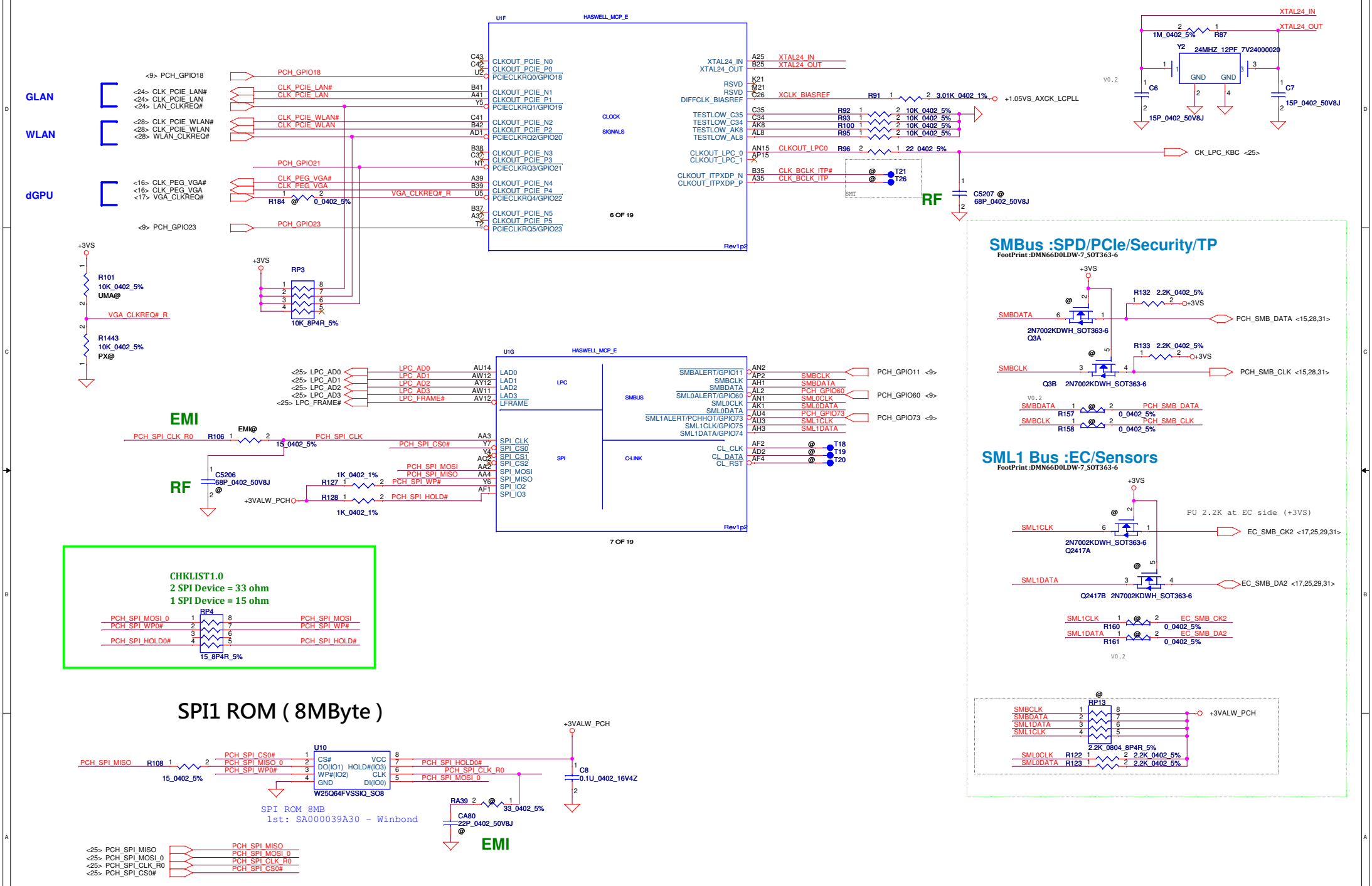


| Security Classification | Compal Secret Data | | | Compal Electronics, Inc. |
|---|---|---|---|---|
| Issued Date | 2011/12/13 | Deciphered Date | 2012/12/13 | Title: HSW MCP(4/11) CLK,SPI,SMBUS |
| THIS SHEET OF ENGINEERING DRAWING IS THE PROPRIETARY PROPERTY OF COMPAL ELECTRONICS, INC. AND CONTAINS CONFIDENTIAL AND TRADE SECRET INFORMATION. THIS SHEET MAY NOT BE TRANSFERED FROM THE CUSTODY OF THE COMPETENT DIVISION OF R&D DEPARTMENT EXCEPT AS AUTHORIZED BY COMPAL ELECTRONICS, INC. NEITHER THIS SHEET NOR THE INFORMATION IT CONTAINS MAY BE USED BY OR DISCLOSED TO ANY THIRD PARTY WITHOUT PRIOR WRITTEN CONSENT OF COMPAL ELECTRONICS, INC. | | | | Size: Custom; Document Number: LA-A321PR02; Rev: 0.2 |
| | | | | Date: Thursday, March 14, 2013; Sheet 7 of 46 |

Note: SUSACK# and SUSWARN# can be tied together if
EC does not want to involve in the handshake mechanism
for the Deep Sleep state entry and exit

CAN be NC ,if not support Deep Sx

DPWROK: Tired toghter with RSMRST#
that do not support Deep Sx

DSWODVREN - On Die DSW VR Enable
★H : Enable(DEFAULT)
L : Disable

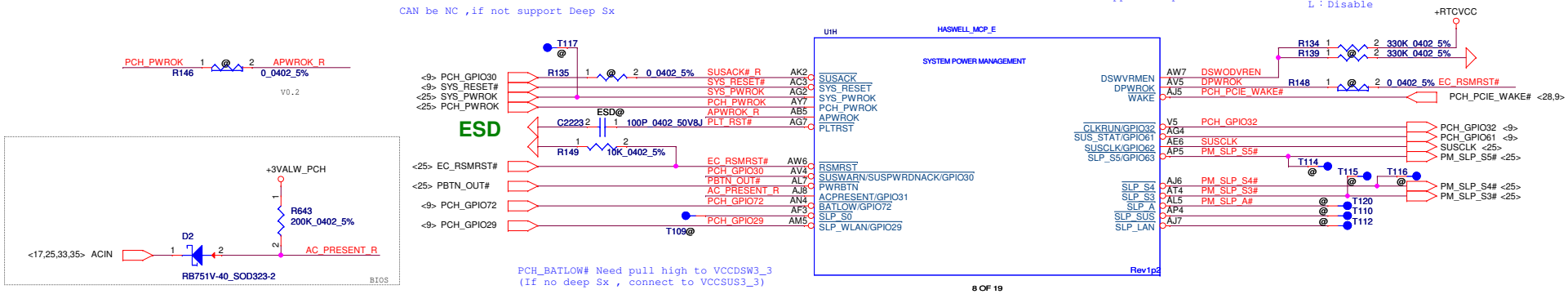


PCH_BATLOW# Need pull high to VCCDSW3_3
(If no deep Sx , connect to VCCSUS3_3)

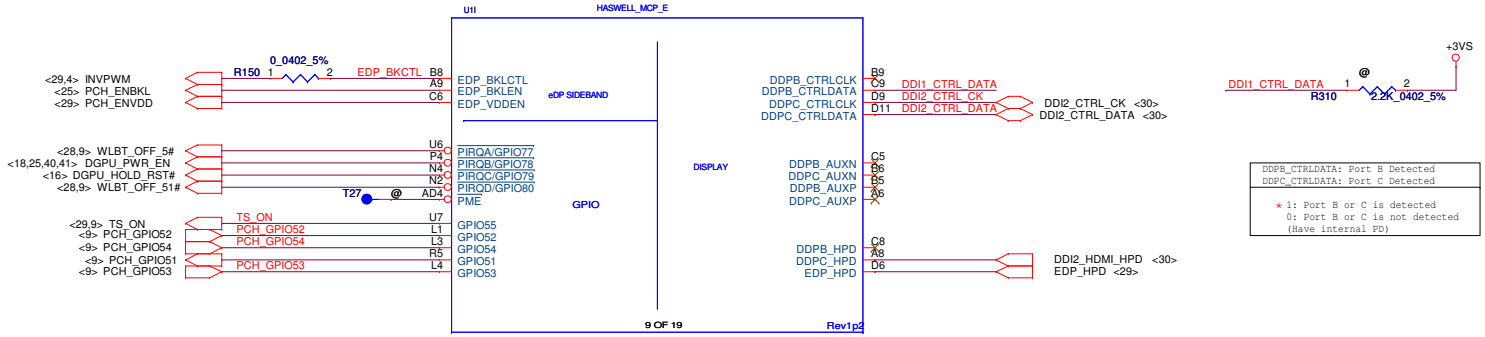


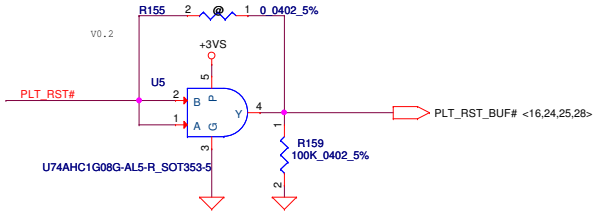


| Security Classification | Compal Secret Data | | | Compal Electronics, Inc. |
|---|---|---|---|---|
| Issued Date | 2011/12/13 | Deciphered Date | 2012/12/13 | Title: HSW MCP(5/11) PM,GPIO,DDI |
| THIS SHEET OF ENGINEERING DRAWING IS THE PROPRIETARY PROPERTY OF COMPAL ELECTRONICS, INC. AND CONTAINS CONFIDENTIAL AND TRADE SECRET INFORMATION. THIS SHEET MAY NOT BE TRANSFERED FROM THE CUSTODY OF THE COMPETENT DIVISION OF R&D DEPARTMENT EXCEPT AS AUTHORIZED BY COMPAL ELECTRONICS, INC. NEITHER THIS SHEET NOR THE INFORMATION IT CONTAINS MAY BE USED BY OR DISCLOSED TO ANY THIRD PARTY WITHOUT PRIOR WRITTEN CONSENT OF COMPAL ELECTRONICS, INC. | | | | Size: Custom; Document Number: LA-A321PR02; Rev: 0.2 |
| | | | | Date: Thursday, March 14, 2013; Sheet 8 of 46 |

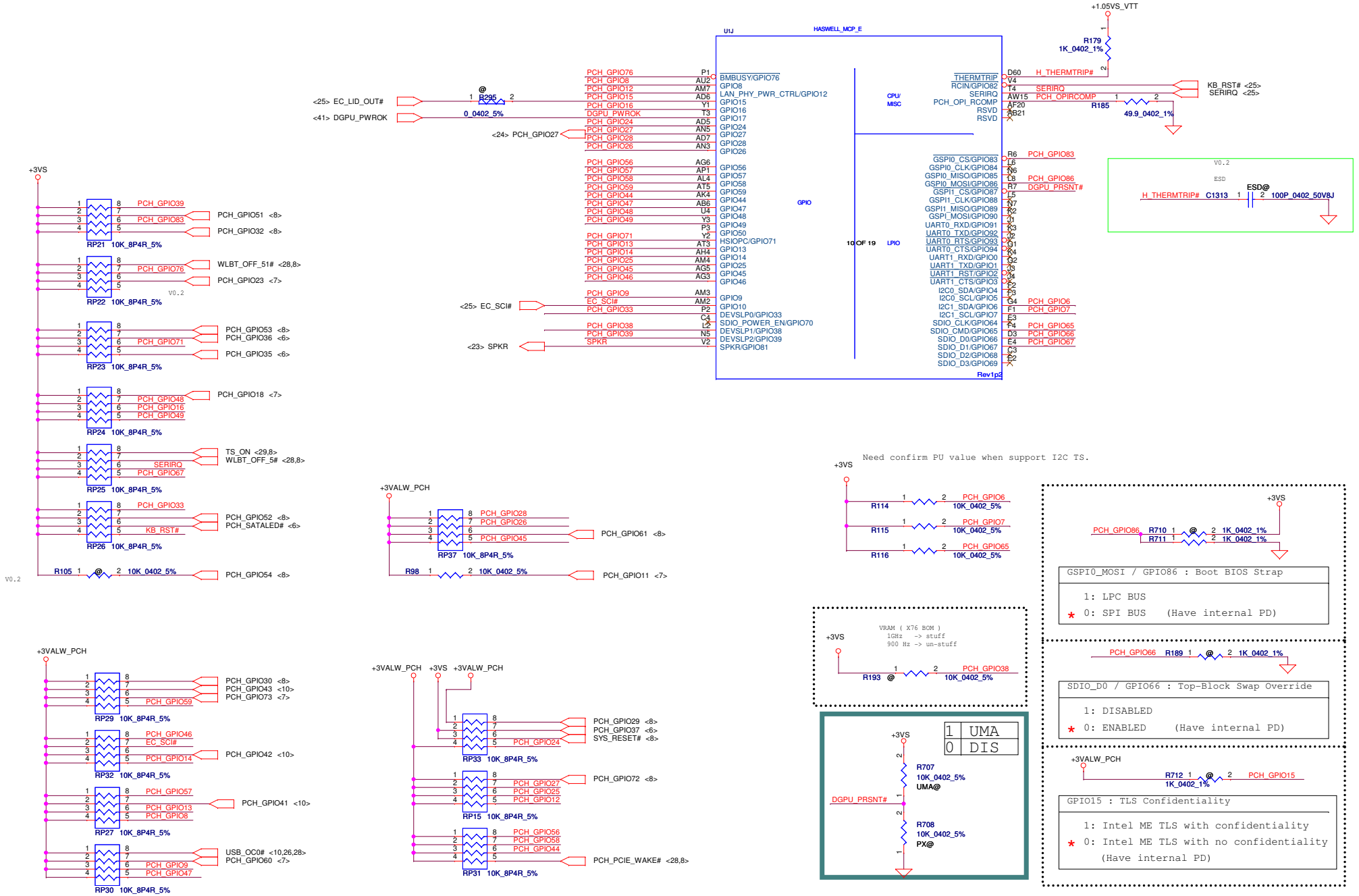


| Security Classification | Compal Secret Data | | |
|---|---|---|---|
| Issued Date | 2011/12/13 | Deciphered Date | 2012/12/13 |

THIS SHEET OF ENGINEERING DRAWING IS THE PROPRIETARY PROPERTY OF COMPAL ELECTRONICS, INC. AND CONTAINS CONFIDENTIAL AND TRADE SECRET INFORMATION. THIS SHEET MAY NOT BE TRANSFERED FROM THE CUSTODY OF THE COMPETENT DIVISION OF R&D DEPARTMENT EXCEPT AS AUTHORIZED BY COMPAL ELECTRONICS, INC. NEITHER THIS SHEET NOR THE INFORMATION IT CONTAINS MAY BE USED BY OR DISCLOSED TO ANY THIRD PARTY WITHOUT PRIOR WRITTEN CONSENT OF COMPAL ELECTRONICS, INC.

**Compal Electronics, Inc.**

Title: **HSW MCP(6/11) GPIO,LPIO**

Size: B/25 Custom | Document Number: **LA-A321PR02** | Rev: 0.2

Date: Thursday, March 14, 2013 | Sheet 9 of 46

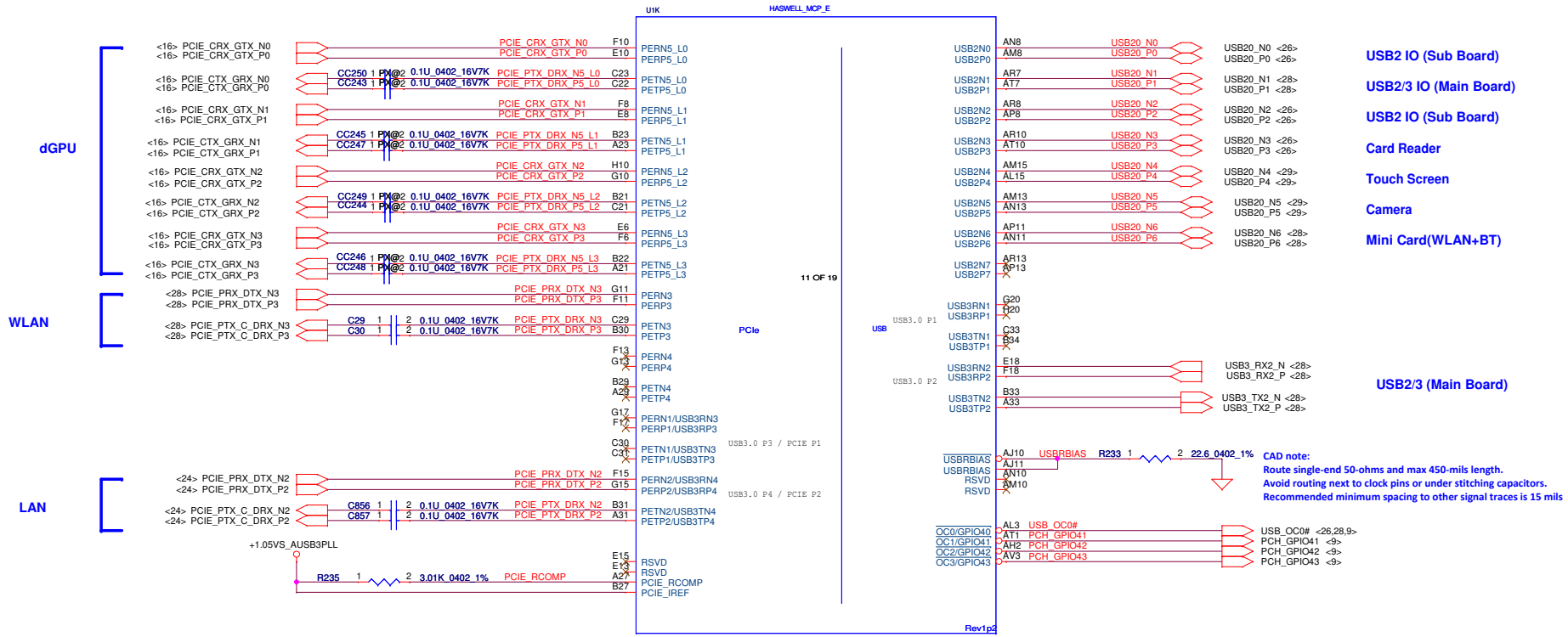


| Security Classification | Compal Secret Data | | |
|---|---|---|---|
| Issued Date | 2011/12/13 | Deciphered Date | 2012/12/13 |

THIS SHEET OF ENGINEERING DRAWING IS THE PROPRIETARY PROPERTY OF COMPAL ELECTRONICS, INC. AND CONTAINS CONFIDENTIAL AND TRADE SECRET INFORMATION. THIS SHEET MAY NOT BE TRANSFERED FROM THE CUSTODY OF THE COMPETENT DIVISION OF R&D DEPARTMENT EXCEPT AS AUTHORIZED BY COMPAL ELECTRONICS, INC. NEITHER THIS SHEET NOR THE INFORMATION IT CONTAINS MAY BE USED BY OR DISCLOSED TO ANY THIRD PARTY WITHOUT PRIOR WRITTEN CONSENT OF COMPAL ELECTRONICS, INC.

**Compal Electronics, Inc.**

Title: **HSW MCP(7/11) PCIE,USB**

Size: B/25 Custom | Document Number: **LA-A321PR02** | Rev: 0.2

Date: Thursday, March 14, 2013 | Sheet 10 of 46

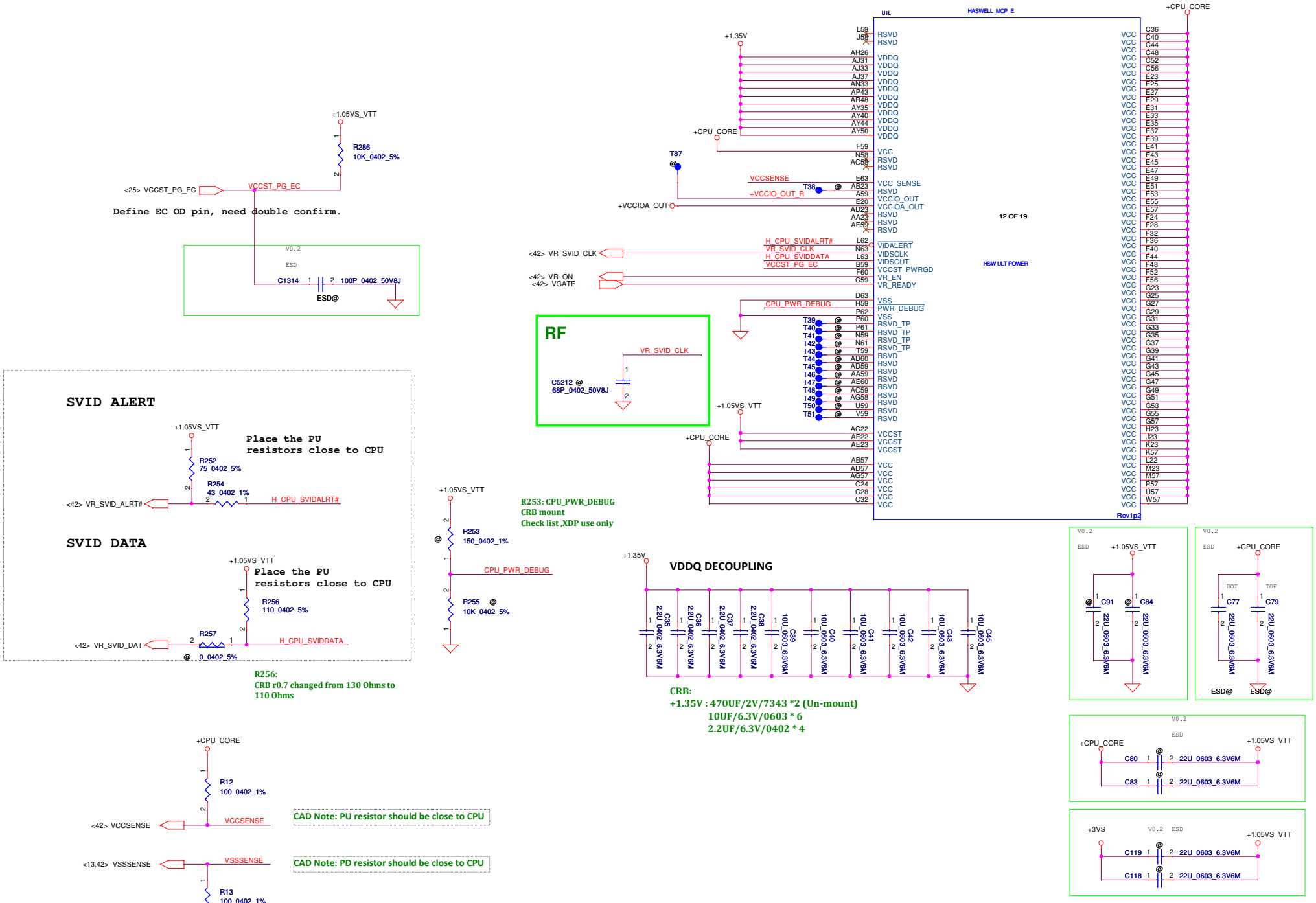


| Security Classification | Compal Secret Data | | |
|---|---|---|---|
| Issued Date | 2011/12/13 | Deciphered Date | 2012/12/13 |

THIS SHEET OF ENGINEERING DRAWING IS THE PROPRIETARY PROPERTY OF COMPAL ELECTRONICS, INC. AND CONTAINS CONFIDENTIAL AND TRADE SECRET INFORMATION. THIS SHEET MAY NOT BE TRANSFERED FROM THE CUSTODY OF THE COMPETENT DIVISION OF R&D DEPARTMENT EXCEPT AS AUTHORIZED BY COMPAL ELECTRONICS, INC. NEITHER THIS SHEET NOR THE INFORMATION IT CONTAINS MAY BE USED BY OR DISCLOSED TO ANY THIRD PARTY WITHOUT PRIOR WRITTEN CONSENT OF COMPAL ELECTRONICS, INC.

**Compal Electronics, Inc.**

Title: **HSW MCP(8/11) Power**

Size: Custom | Document Number: **LA-A321PR02** | Rev: 0.2

Date: Thursday, March 14, 2013 | Sheet 11 of 46

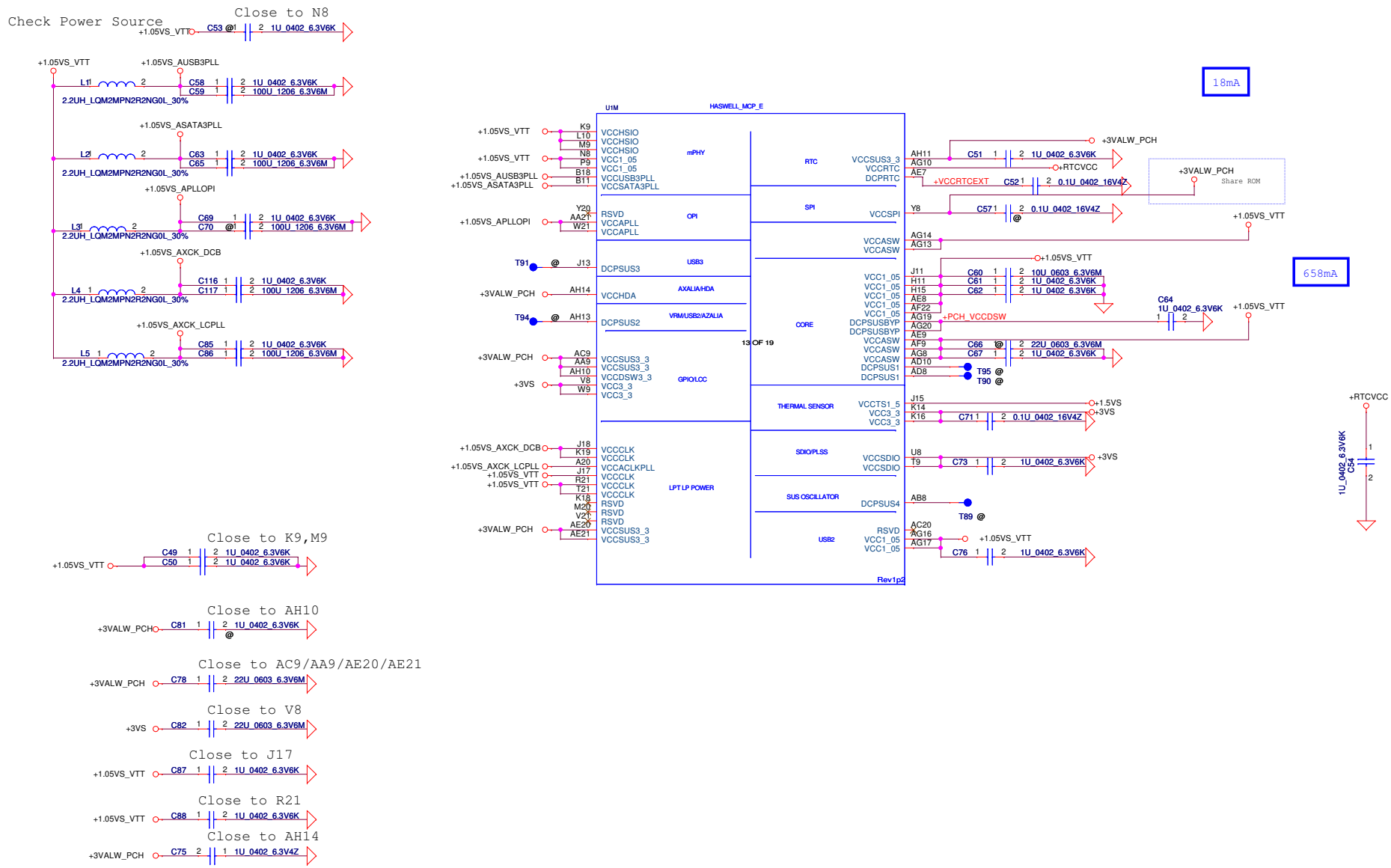


| Security Classification | Compal Secret Data | | |
|---|---|---|---|
| Issued Date | 2011/12/13 | Deciphered Date | 2012/12/13 |

THIS SHEET OF ENGINEERING DRAWING IS THE PROPRIETARY PROPERTY OF COMPAL ELECTRONICS, INC. AND CONTAINS CONFIDENTIAL AND TRADE SECRET INFORMATION. THIS SHEET MAY NOT BE TRANSFERED FROM THE CUSTODY OF THE COMPETENT DIVISION OF R&D DEPARTMENT EXCEPT AS AUTHORIZED BY COMPAL ELECTRONICS, INC. NEITHER THIS SHEET NOR THE INFORMATION IT CONTAINS MAY BE USED BY OR DISCLOSED TO ANY THIRD PARTY WITHOUT PRIOR WRITTEN CONSENT OF COMPAL ELECTRONICS, INC.

**Compal Electronics, Inc.**

Title: **HSW MCP(9/11) Power**

Size: Custom | Document Number: **LA-A321PR02** | Rev: 0.2

Date: Thursday, March 14, 2013 | Sheet 12 of 46

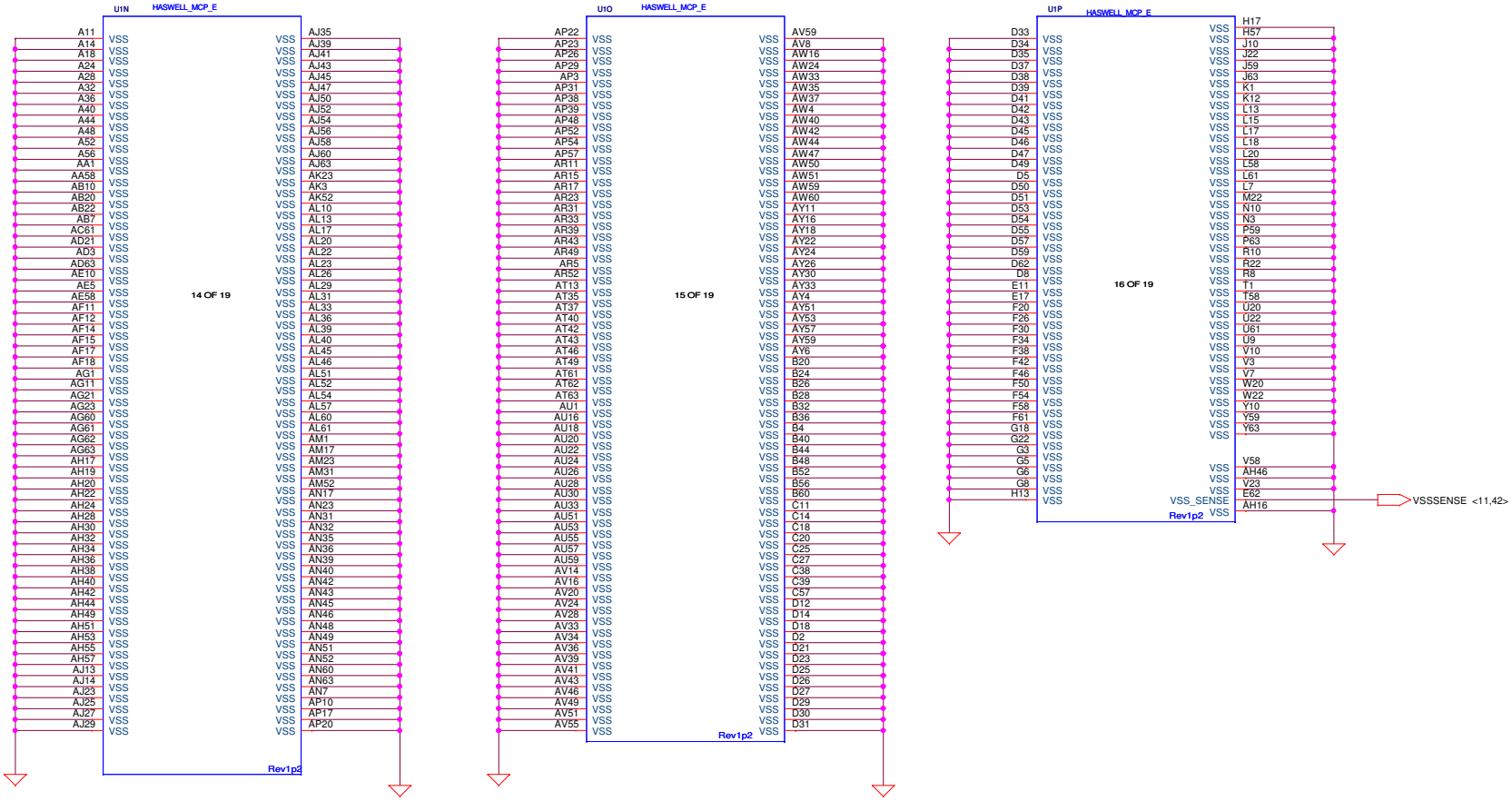


| | | | |
|---|---|---|---|
| Security Classification | Compal Secret Data | | |
| Issued Date | 2011/12/13 | Deciphered Date | 2012/12/13 |

THIS SHEET OF ENGINEERING DRAWING IS THE PROPRIETARY PROPERTY OF COMPAL ELECTRONICS, INC. AND CONTAINS CONFIDENTIAL AND TRADE SECRET INFORMATION. THIS SHEET MAY NOT BE TRANSFERED FROM THE CUSTODY OF THE COMPETENT DIVISION OF R&D DEPARTMENT EXCEPT AS AUTHORIZED BY COMPAL ELECTRONICS, INC. NEITHER THIS SHEET NOR THE INFORMATION IT CONTAINS MAY BE USED BY OR DISCLOSED TO ANY THIRD PARTY WITHOUT PRIOR WRITTEN CONSENT OF COMPAL ELECTRONICS, INC.

**Compal Electronics, Inc.**

Title: **HSW MCP(10/11) GND**

Size: Custom | Document Number: **LA-A321PR02** | Rev: 0.2

Date: Thursday, March 14, 2013 | Sheet 13 of 46

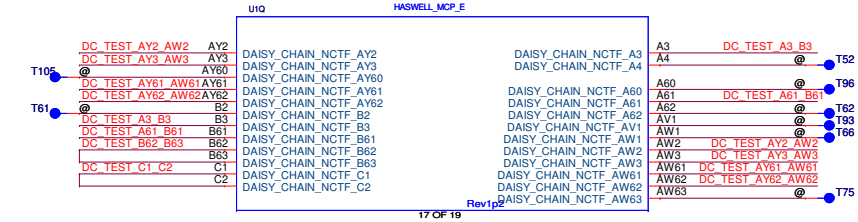


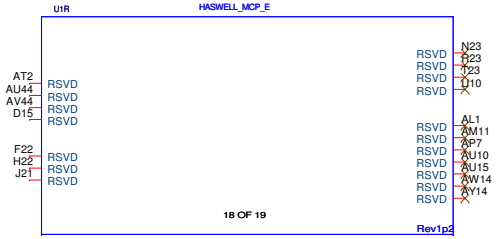


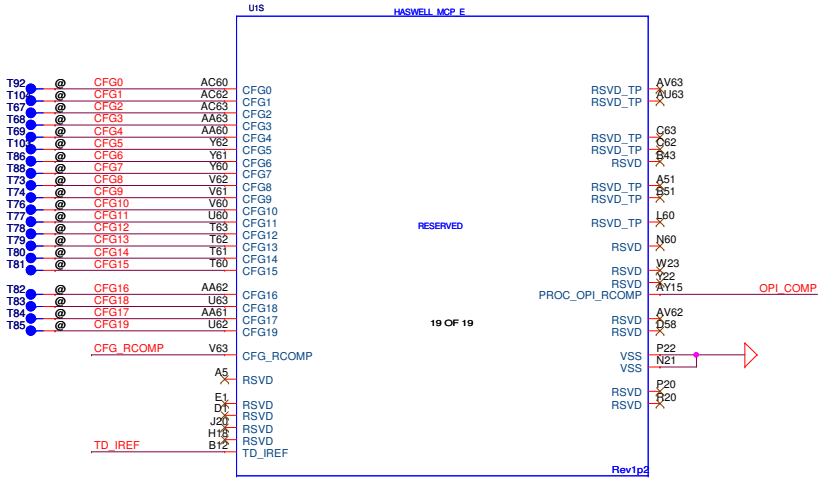


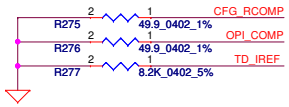


## CFG Straps for Processor

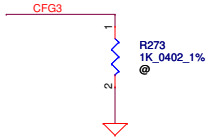


| Physical Debug Enable (DFX Privacy) | |
|---|---|
| CFG3 | 1: DISABLED<br>0: ENABLED; SET DFX ENABLED BIT IN DEBUG INTERFACE MSR |

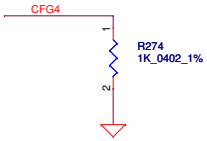


| Display Port Presence Strap | |
|---|---|
| CFG4 | 1 : Disabled; No Physical Display Port attached to Embedded Display Port<br><br>0 : Enabled; An external Display Port device is connected to the Embedded Display Port |

| Security Classification | Compal Secret Data | | |
|---|---|---|---|
| Issued Date | 2011/12/13 | Deciphered Date | 2012/12/13 |

THIS SHEET OF ENGINEERING DRAWING IS THE PROPRIETARY PROPERTY OF COMPAL ELECTRONICS, INC. AND CONTAINS CONFIDENTIAL AND TRADE SECRET INFORMATION. THIS SHEET MAY NOT BE TRANSFERED FROM THE CUSTODY OF THE COMPETENT DIVISION OF R&D DEPARTMENT EXCEPT AS AUTHORIZED BY COMPAL ELECTRONICS, INC. NEITHER THIS SHEET NOR THE INFORMATION IT CONTAINS MAY BE USED BY OR DISCLOSED TO ANY THIRD PARTY WITHOUT PRIOR WRITTEN CONSENT OF COMPAL ELECTRONICS, INC.

Compal Electronics, Inc.

Title: HSW MCP(11/11) RSVD

Size: Custom | Document Number: LA-A321PR02 | Rev: 0.2

Date: Thursday, March 14, 2013 | Sheet 14 of 46

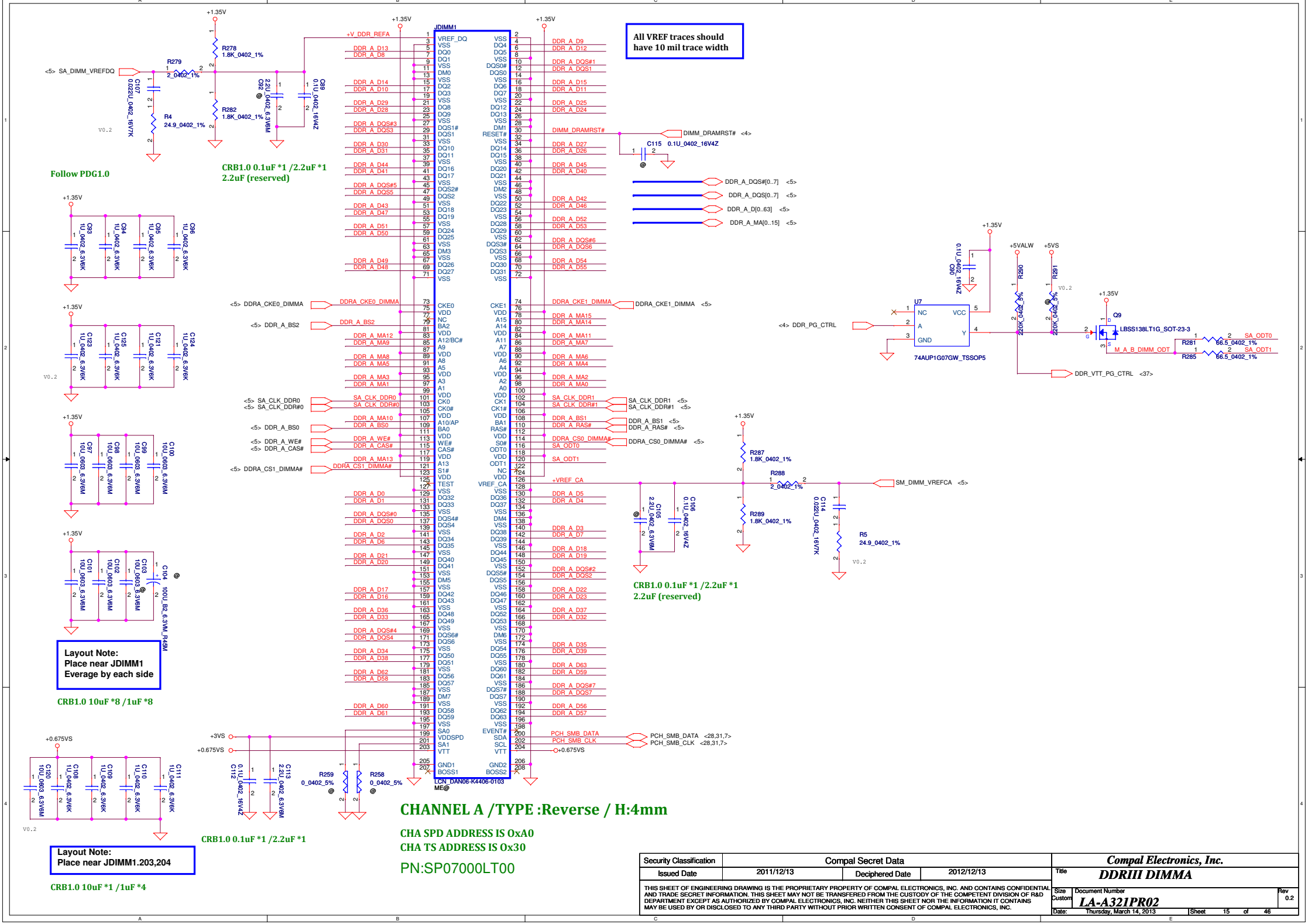


| Security Classification | Compal Secret Data | | |
|---|---|---|---|
| Issued Date | 2011/12/13 | Deciphered Date | 2012/12/13 |

THIS SHEET OF ENGINEERING DRAWING IS THE PROPRIETARY PROPERTY OF COMPAL ELECTRONICS, INC. AND CONTAINS CONFIDENTIAL AND TRADE SECRET INFORMATION. THIS SHEET MAY NOT BE TRANSFERED FROM THE CUSTODY OF THE COMPETENT DIVISION OF R&D DEPARTMENT EXCEPT AS AUTHORIZED BY COMPAL ELECTRONICS, INC. NEITHER THIS SHEET NOR THE INFORMATION IT CONTAINS MAY BE USED BY OR DISCLOSED TO ANY THIRD PARTY WITHOUT PRIOR WRITTEN CONSENT OF COMPAL ELECTRONICS, INC.

Compal Electronics, Inc.

Title: DDRIII DIMMA

Size: Custom | Document Number: LA-A321PR02 | Rev: 0.2

Date: Thursday, March 14, 2013 | Sheet 15 of 46

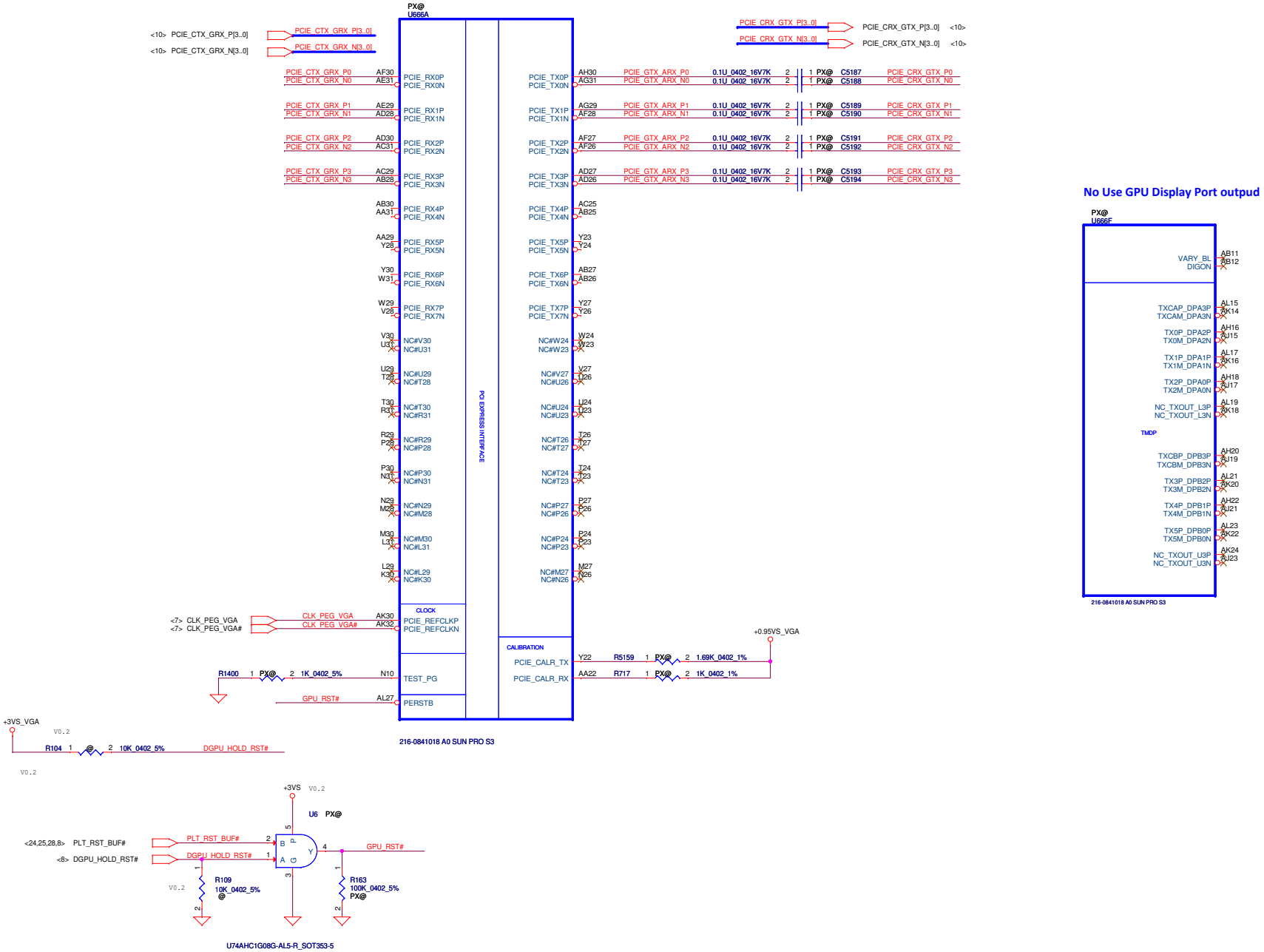


| Security Classification | Compal Secret Data | | |
|---|---|---|---|
| Issued Date | 2013/01/11 | Deciphered Date | 2013/12/31 |

THIS SHEET OF ENGINEERING DRAWING IS THE PROPRIETARY PROPERTY OF COMPAL ELECTRONICS, INC. AND CONTAINS CONFIDENTIAL AND TRADE SECRET INFORMATION. THIS SHEET MAY NOT BE TRANSFERED FROM THE CUSTODY OF THE COMPETENT DIVISION OF R&D DEPARTMENT EXCEPT AS AUTHORIZED BY COMPAL ELECTRONICS, INC. NEITHER THIS SHEET NOR THE INFORMATION IT CONTAINS MAY BE USED BY OR DISCLOSED TO ANY THIRD PARTY WITHOUT PRIOR WRITTEN CONSENT OF COMPAL ELECTRONICS, INC.

**Compal Electronics, Inc.**

Title: **SUN_PCIE/DP**

Size: Custom | Document Number: **LA-A321PR02** | Rev: 0.2

Date: Thursday, March 14, 2013 | Sheet 16 of 46

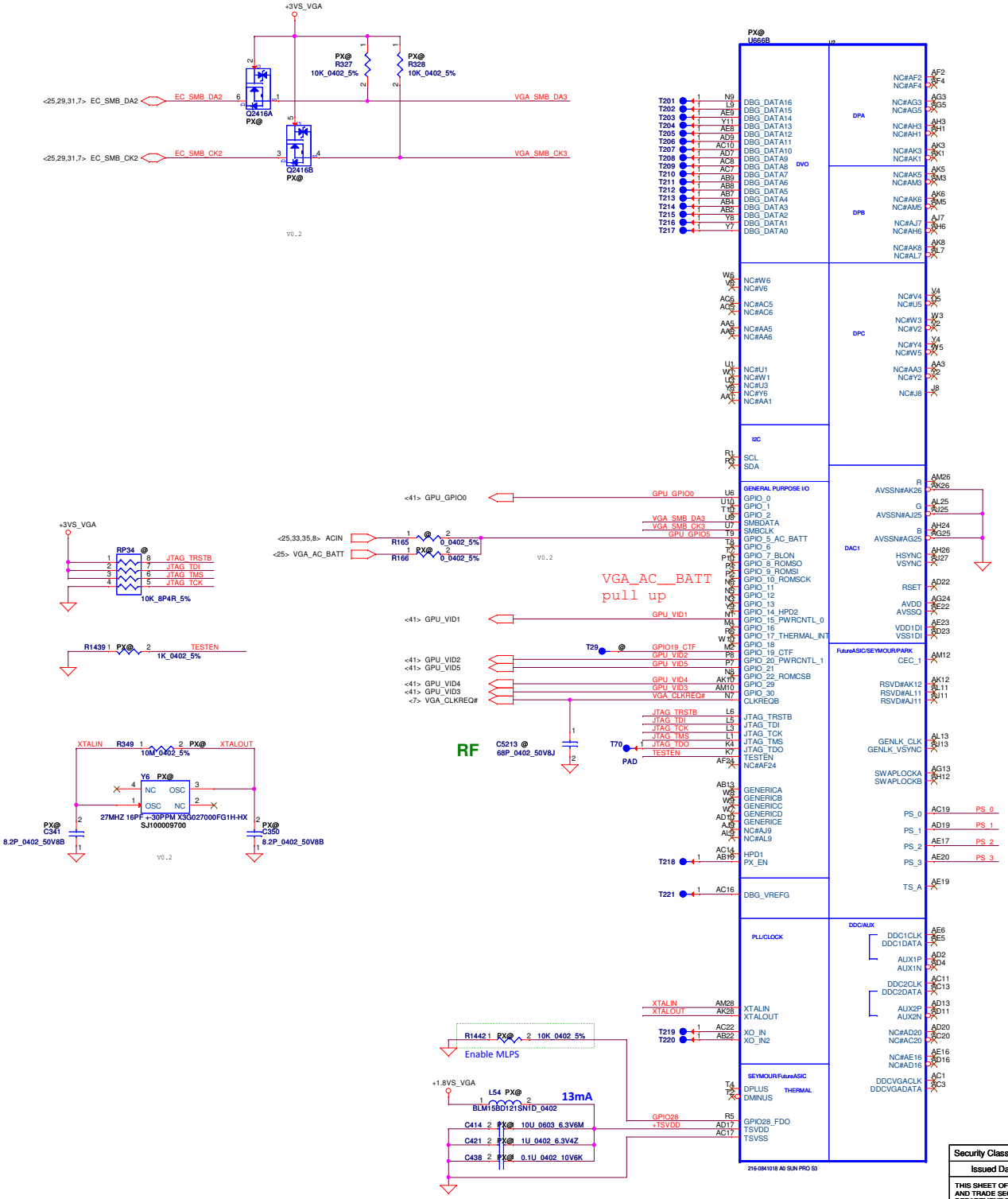


| Resistor Divider Lookup Lable | | |
|---|---|---|
| R_pu (ohm) | R_pd (ohm) | Bitd [3:1] |
| NC | 4.75k | 000 |
| 8.45k | 2k | 001 |
| 4.53k | 2k | 010 |
| 6.98k | 4.99k | 011 |
| 4.53k | 4.99k | 100 |
| 3.24k | 5.62k | 101 |
| 3.4k | 10k | 110 |
| 4.75k | NC | 111 |

0402 1% resistors are equired

X76 @

| Capacitor Divider Lookup Lable | |
|---|---|
| Cap (nF) | Bitd [5:4] |
| 680nF | 00 |
| 82nF | 01 |
| 10nF | 10 |
| NC | 11 |

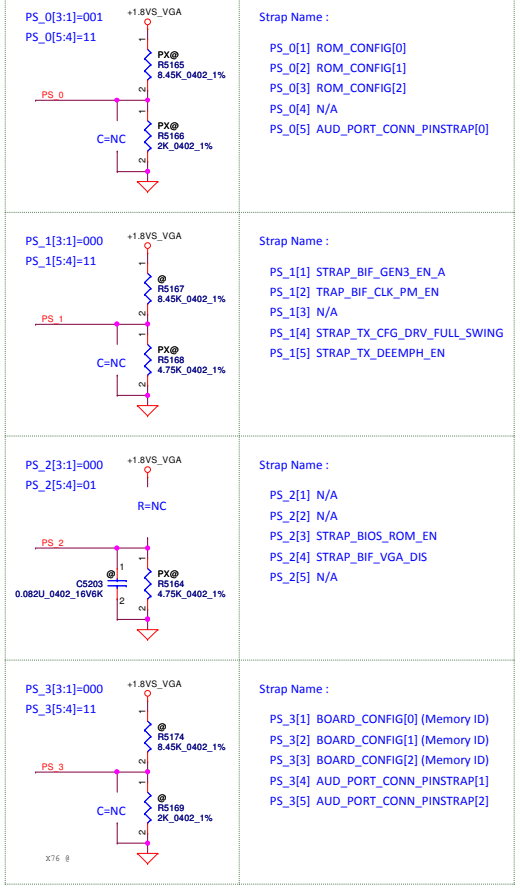


(default)

| Memory ID | Memory Type | Configuration | Size |
|---|---|---|---|
| 000 | SA000068U00 | Samsung K4W2G1646E-BC1A | 1GB |
| 001 | SA000067500 | Micron MT41J128M16JT-093G:K | 1GB |
| 010 | SA00006H400 | Hynix H5TC2G63FFR-11C | 1GB |
| 011 | SA000068R10 | Samsung K4W4G1646B-HC11 | 2GB |
| 100 | SA000065D20 | Micron MT41K256M16HA-107G:E | 2GB |

| Security Classification | Compal Secret Data | | |
|---|---|---|---|
| Issued Date | 2013/01/11 | Deciphered Date | 2013/12/31 |

THIS SHEET OF ENGINEERING DRAWING IS THE PROPRIETARY PROPERTY OF COMPAL ELECTRONICS, INC. AND CONTAINS CONFIDENTIAL AND TRADE SECRET INFORMATION. THIS SHEET MAY NOT BE TRANSFERED FROM THE CUSTODY OF THE COMPETENT DIVISION OF R&D DEPARTMENT EXCEPT AS AUTHORIZED BY COMPAL ELECTRONICS, INC. NEITHER THIS SHEET NOR THE INFORMATION IT CONTAINS MAY BE USED BY OR DISCLOSED TO ANY THIRD PARTY WITHOUT PRIOR WRITTEN CONSENT OF COMPAL ELECTRONICS, INC.

Compal Electronics, Inc.

Title: SUN_MSIC

Size: Custom | Document Number: LA-A321PR02 | Rev: 0.2

Date: Thursday, March 14, 2013 | Sheet 17 of 46

## +3VS to +3VSG (60mA)
## +1.5V to +1.5VSG (2.096A)

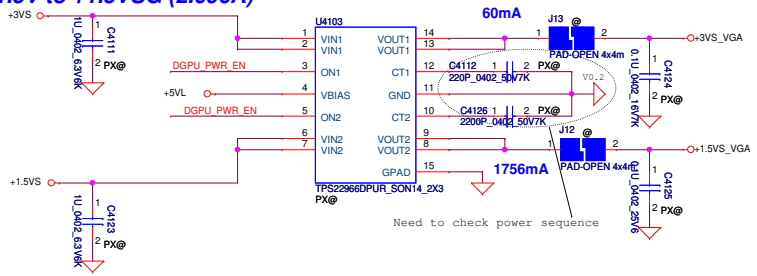


## +1.8VALW to +1.8VSG (818mA)

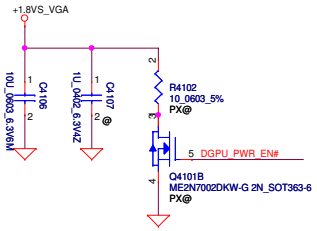


## +0.95VALW to +0.95VSG (4.016A)

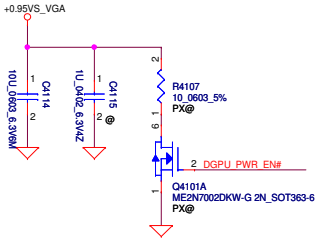


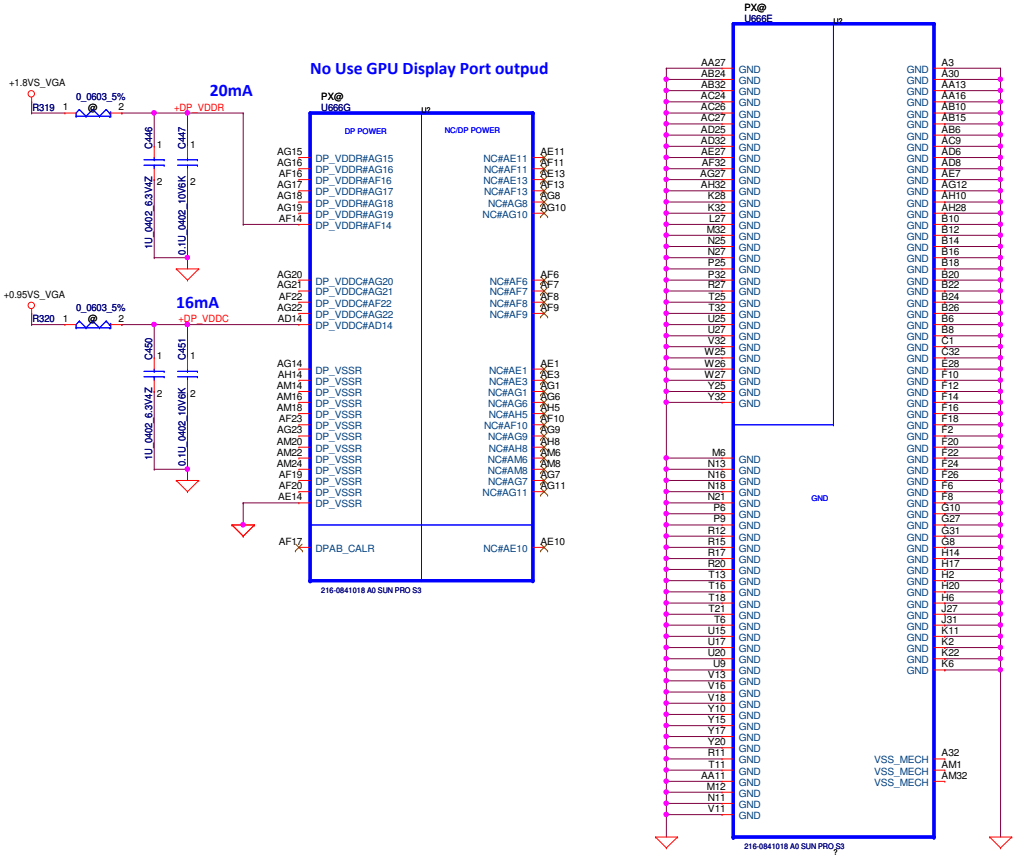


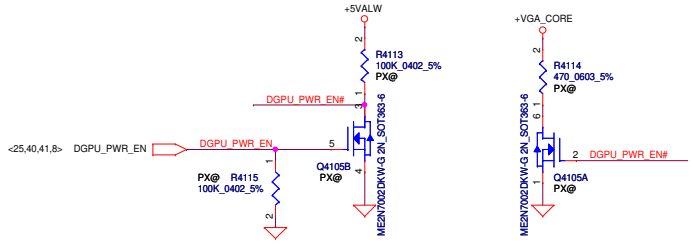


| Security Classification | Compal Secret Data | | |
|---|---|---|---|
| Issued Date | 2013/01/11 | Deciphered Date | 2013/12/31 |

THIS SHEET OF ENGINEERING DRAWING IS THE PROPRIETARY PROPERTY OF COMPAL ELECTRONICS, INC. AND CONTAINS CONFIDENTIAL AND TRADE SECRET INFORMATION. THIS SHEET MAY NOT BE TRANSFERED FROM THE CUSTODY OF THE COMPETENT DIVISION OF R&D DEPARTMENT EXCEPT AS AUTHORIZED BY COMPAL ELECTRONICS, INC. NEITHER THIS SHEET NOR THE INFORMATION IT CONTAINS MAY BE USED BY OR DISCLOSED TO ANY THIRD PARTY WITHOUT PRIOR WRITTEN CONSENT OF COMPAL ELECTRONICS, INC.

**Compal Electronics, Inc.**

Title: **SUN_Power/GND**

Size: Custom | Document Number: **LA-A321PR02** | Rev: 0.2

Date: Tuesday, March 19, 2013 | Sheet 18 of 46

| +VGA_CORE | | 10uF | 1uF | 0.1uF |
|---|---|---|---|---|
| VDDC | TBD | 5 (1@) | 10 (2@) | 0 |
| VDDCI | 3.5A | 1 | 3 | 0 |

| +0.95VS_VGA | | 10uF | 1uF | 0.1uF |
|---|---|---|---|---|
| PCIE_VDDC | 2.5A | 2 (1@) | 5 (1@) | 0 |
| BIF_VDDC | 1.4A | 0 | 0 | 0 |
| SPLL_VDDC | 100mA | 1 | 1 | 1 |

| +1.5VS_VGA | | 10uF | 1uF | 0.1uF |
|---|---|---|---|---|
| VDDR1 | 1.5A | 3 | 5 | 5 |

| +1.8VS_VGA | | 10uF | 1uF | 0.1uF |
|---|---|---|---|---|
| PCIE_PVDD | 100mA | 1 | 1 | 1 |
| MPLL_PVDD | 130mA | 1 | 1 | 1 |
| SPLL_PVDD | 75mA | 1 | 1 | 1 |
| VDDR4 | (300mA) | 0 | 0 | 0 |
| VDD_CT | 13mA | 1 | 1 | 1 |
| +TSVDD | 13mA | 1 | 1 | 1 |
| +DP_VDDR | | 0 | 0 | 0 |
| +DP_VDDC | | 0 | 0 | 0 |

| +3VS_VGA | | 10uF | 1uF | 0.1uF |
|---|---|---|---|---|
| VDDR3 | 25mA | 0 | 2 (1@) | 1 |

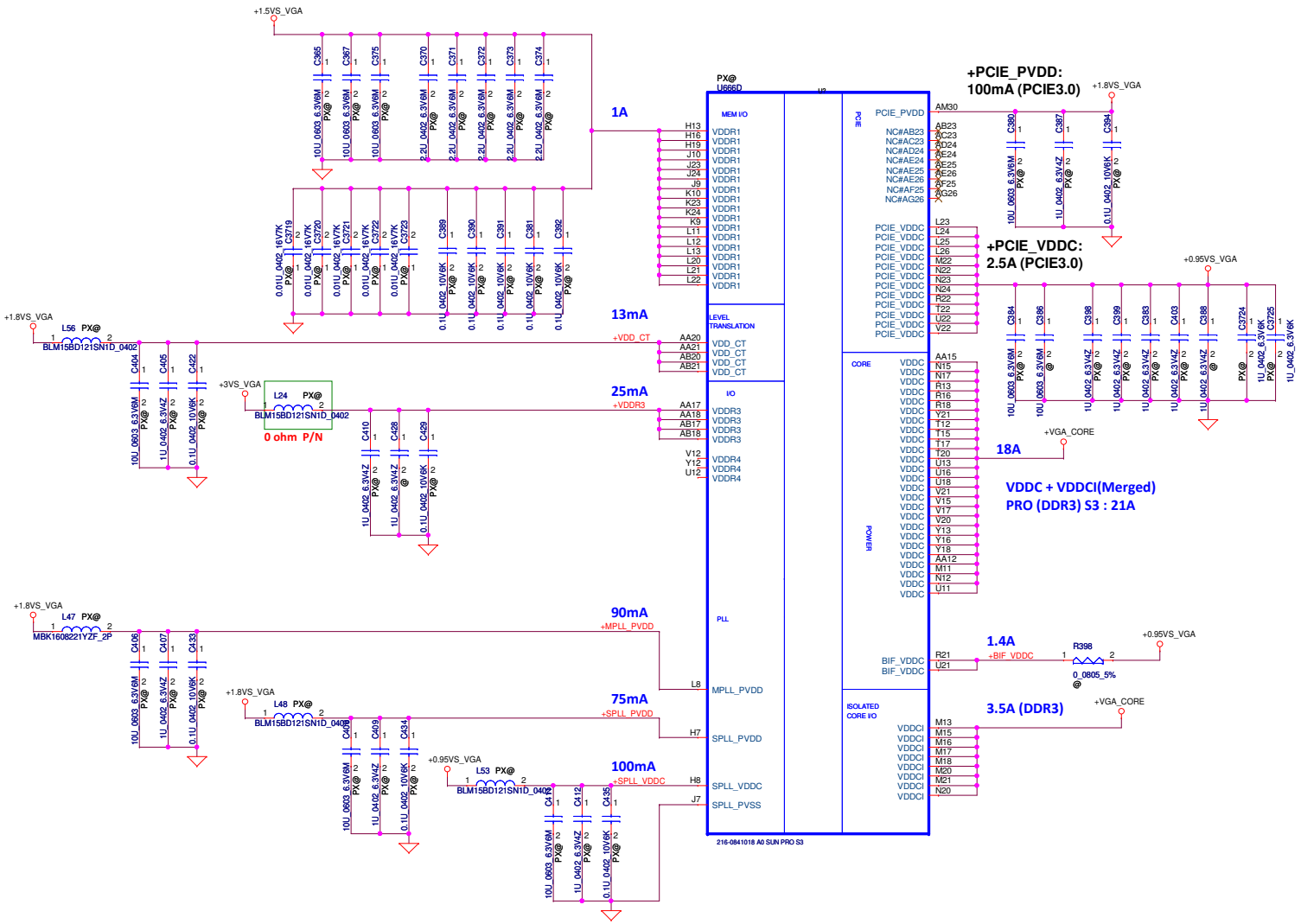


| Security Classification | Compal Secret Data | | |
|---|---|---|---|
| Issued Date | 2013/01/11 | Deciphered Date | 2013/12/31 |

THIS SHEET OF ENGINEERING DRAWING IS THE PROPRIETARY PROPERTY OF COMPAL ELECTRONICS, INC. AND CONTAINS CONFIDENTIAL AND TRADE SECRET INFORMATION. THIS SHEET MAY NOT BE TRANSFERED FROM THE CUSTODY OF THE COMPETENT DIVISION OF R&D DEPARTMENT EXCEPT AS AUTHORIZED BY COMPAL ELECTRONICS, INC. NEITHER THIS SHEET NOR THE INFORMATION IT CONTAINS MAY BE USED BY OR DISCLOSED TO ANY THIRD PARTY WITHOUT PRIOR WRITTEN CONSENT OF COMPAL ELECTRONICS, INC.

Compal Electronics, Inc.

Title: SUN_Power

Size: Custom | Document Number: LA-A321PR02 | Rev: 0.2

Date: Thursday, March 14, 2013 | Sheet 19 of 46

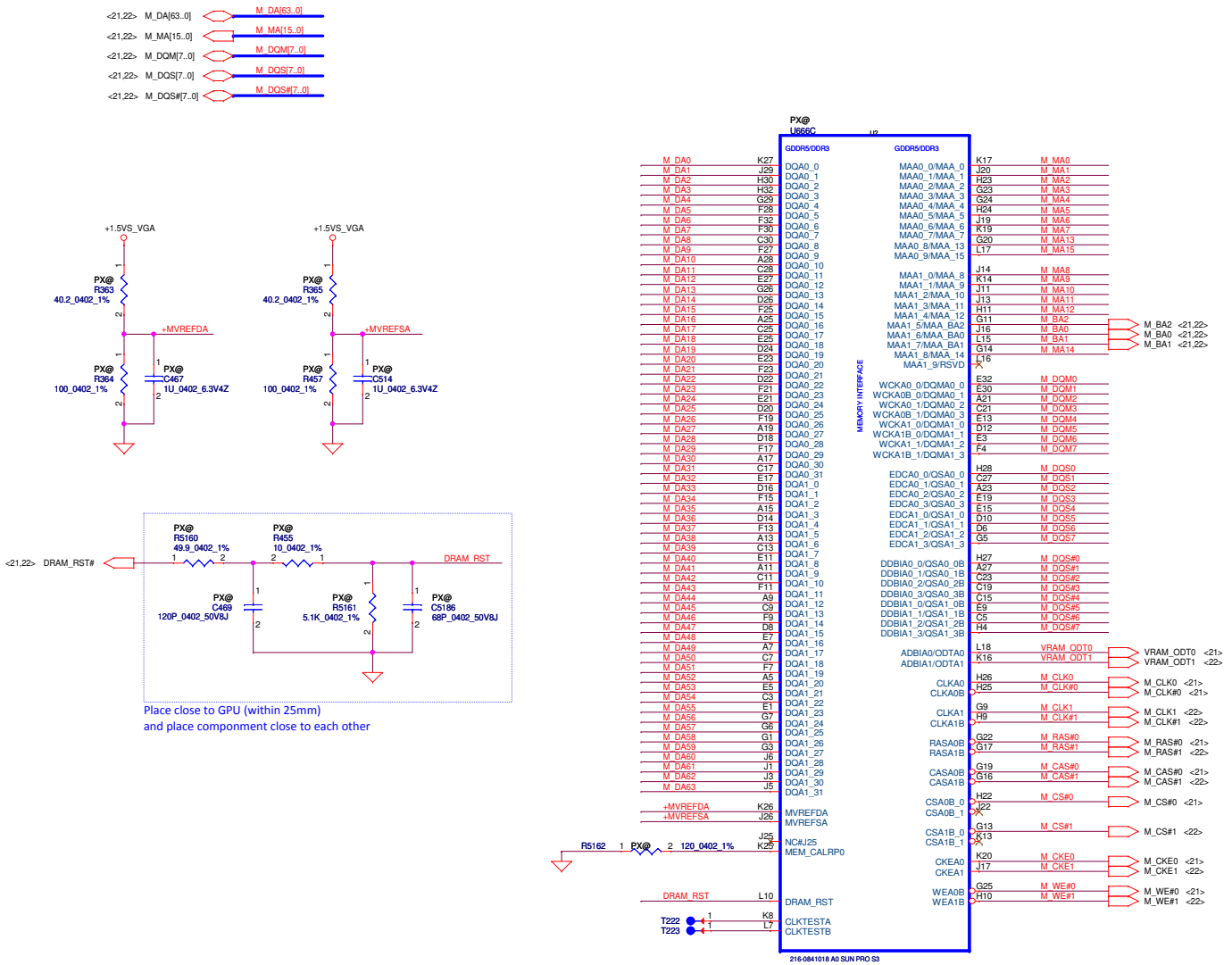


| Security Classification | Compal Secret Data | | |
|---|---|---|---|
| Issued Date | 2013/01/11 | Deciphered Date | 2013/12/31 |

THIS SHEET OF ENGINEERING DRAWING IS THE PROPRIETARY PROPERTY OF COMPAL ELECTRONICS, INC. AND CONTAINS CONFIDENTIAL AND TRADE SECRET INFORMATION. THIS SHEET MAY NOT BE TRANSFERED FROM THE CUSTODY OF THE COMPETENT DIVISION OF R&D DEPARTMENT EXCEPT AS AUTHORIZED BY COMPAL ELECTRONICS, INC. NEITHER THIS SHEET NOR THE INFORMATION IT CONTAINS MAY BE USED BY OR DISCLOSED TO ANY THIRD PARTY WITHOUT PRIOR WRITTEN CONSENT OF COMPAL ELECTRONICS, INC.

**Compal Electronics, Inc.**

Title: **SUN_MEM**

Size: Custom | Document Number: **LA-A321PR02** | Rev: 0.2

Date: Thursday, March 14, 2013 | Sheet 20 of 46

# Memory Partition A - Lower 32 bits

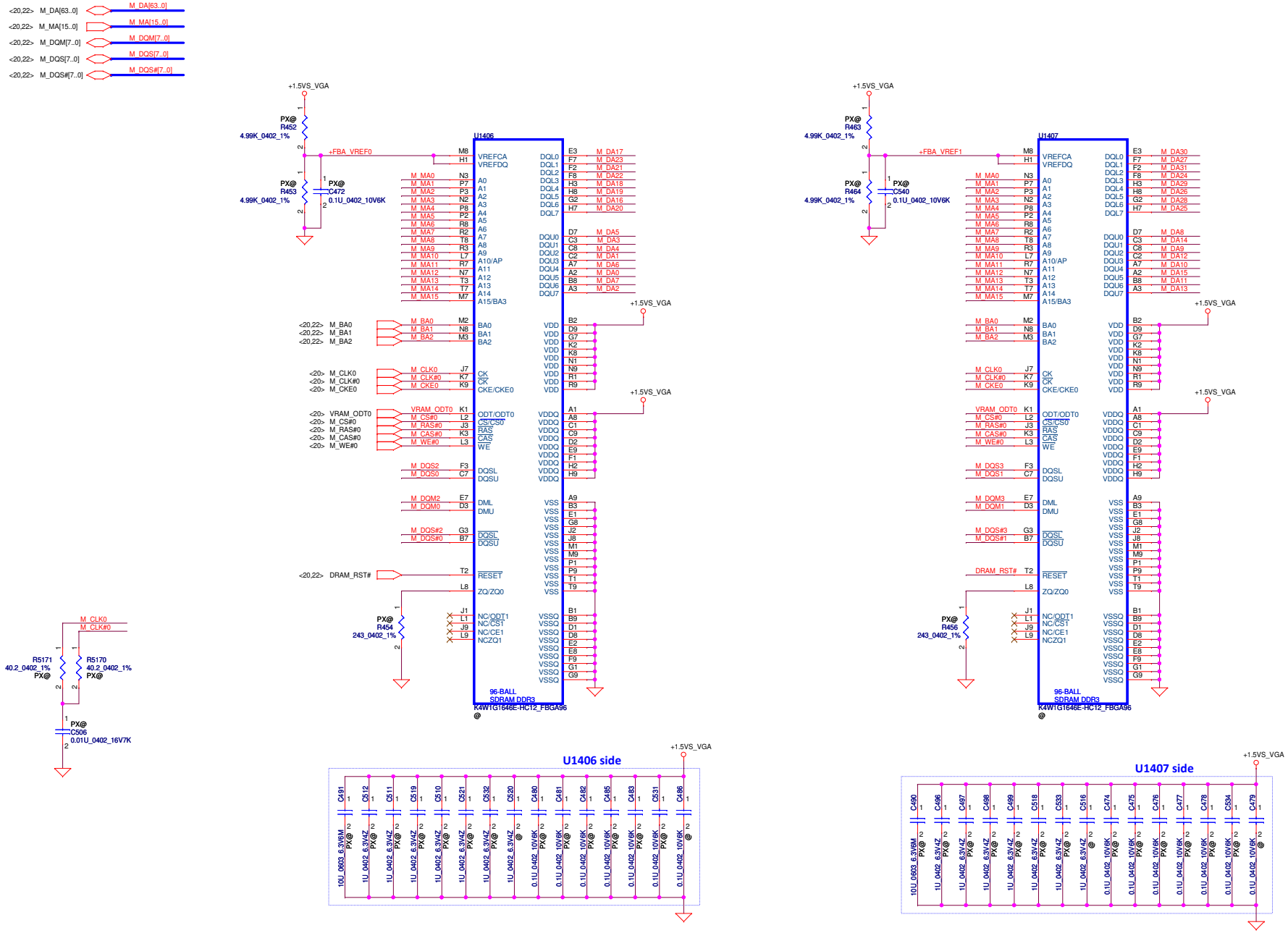


| Security Classification | Compal Secret Data | | |
|---|---|---|---|
| Issued Date | 2013/01/11 | Deciphered Date | 2013/12/31 |

THIS SHEET OF ENGINEERING DRAWING IS THE PROPRIETARY PROPERTY OF COMPAL ELECTRONICS, INC. AND CONTAINS CONFIDENTIAL AND TRADE SECRET INFORMATION. THIS SHEET MAY NOT BE TRANSFERED FROM THE CUSTODY OF THE COMPETENT DIVISION OF R&D DEPARTMENT EXCEPT AS AUTHORIZED BY COMPAL ELECTRONICS, INC. NEITHER THIS SHEET NOR THE INFORMATION IT CONTAINS MAY BE USED BY OR DISCLOSED TO ANY THIRD PARTY WITHOUT PRIOR WRITTEN CONSENT OF COMPAL ELECTRONICS, INC.

Compal Electronics, Inc.

Title: SUN_VRAM A Lower

Size: Custom | Document Number: LA-A321PR02 | Rev: 0.2

Date: Thursday, March 14, 2013 | Sheet 21 of 46

# Memory Partition A - Upper 32 bits

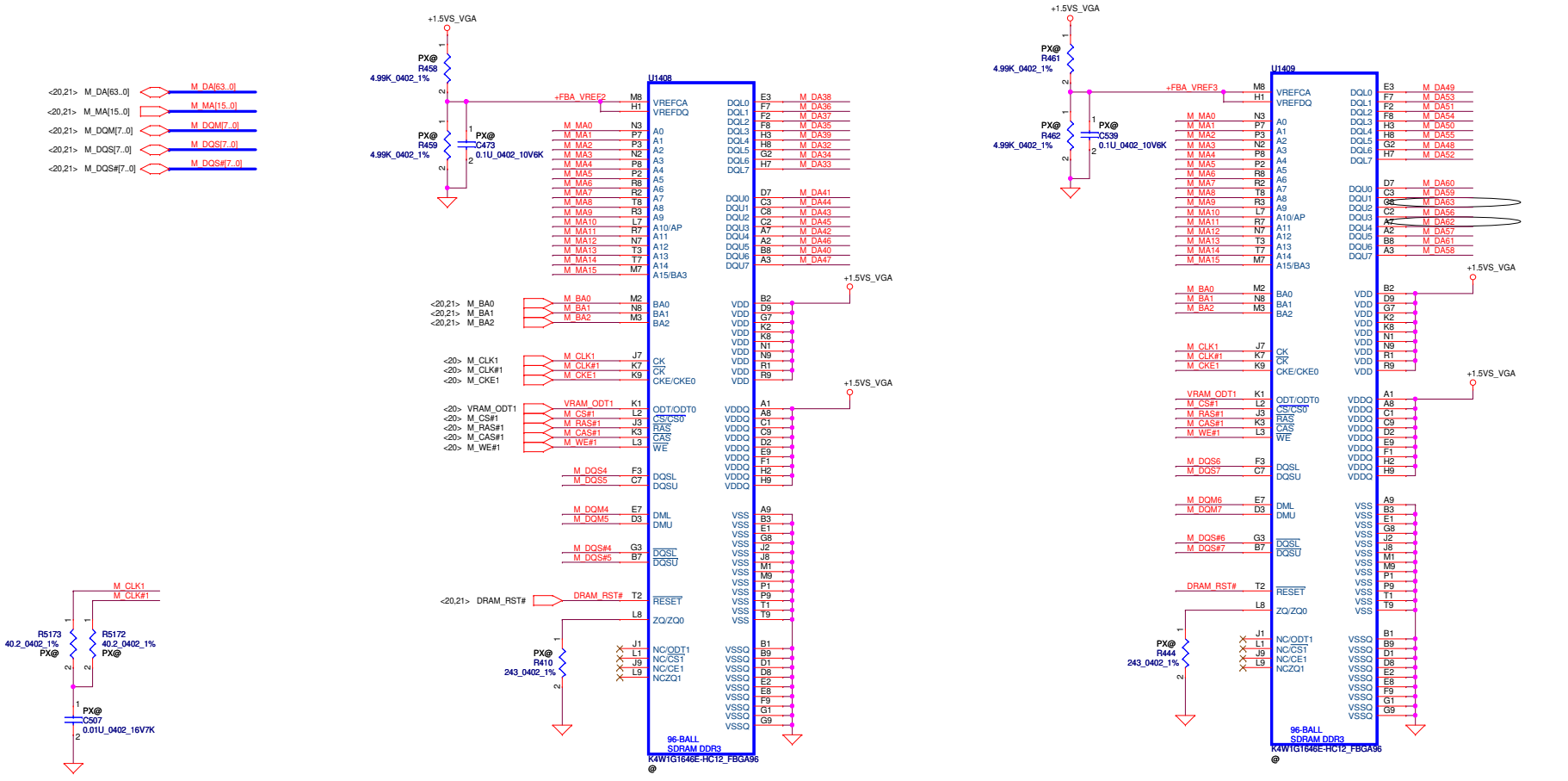


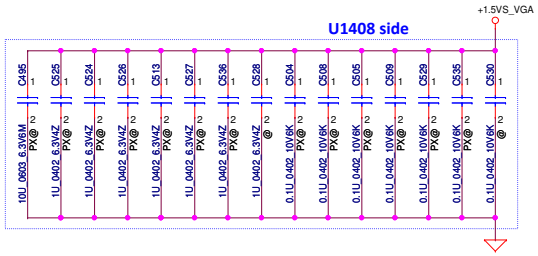


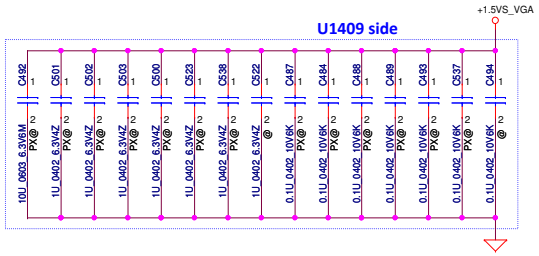


| Security Classification | Compal Secret Data | | |
|---|---|---|---|
| Issued Date | 2013/01/11 | Deciphered Date | 2013/12/31 |

THIS SHEET OF ENGINEERING DRAWING IS THE PROPRIETARY PROPERTY OF COMPAL ELECTRONICS, INC. AND CONTAINS CONFIDENTIAL AND TRADE SECRET INFORMATION. THIS SHEET MAY NOT BE TRANSFERED FROM THE CUSTODY OF THE COMPETENT DIVISION OF R&D DEPARTMENT EXCEPT AS AUTHORIZED BY COMPAL ELECTRONICS, INC. NEITHER THIS SHEET NOR THE INFORMATION IT CONTAINS MAY BE USED BY OR DISCLOSED TO ANY THIRD PARTY WITHOUT PRIOR WRITTEN CONSENT OF COMPAL ELECTRONICS, INC.

Compal Electronics, Inc.

Title: SUN_VRAM A Upper

Size: Custom | Document Number: LA-A321PR02 | Rev: 0.2

Date: Thursday, March 14, 2013 | Sheet 22 of 46

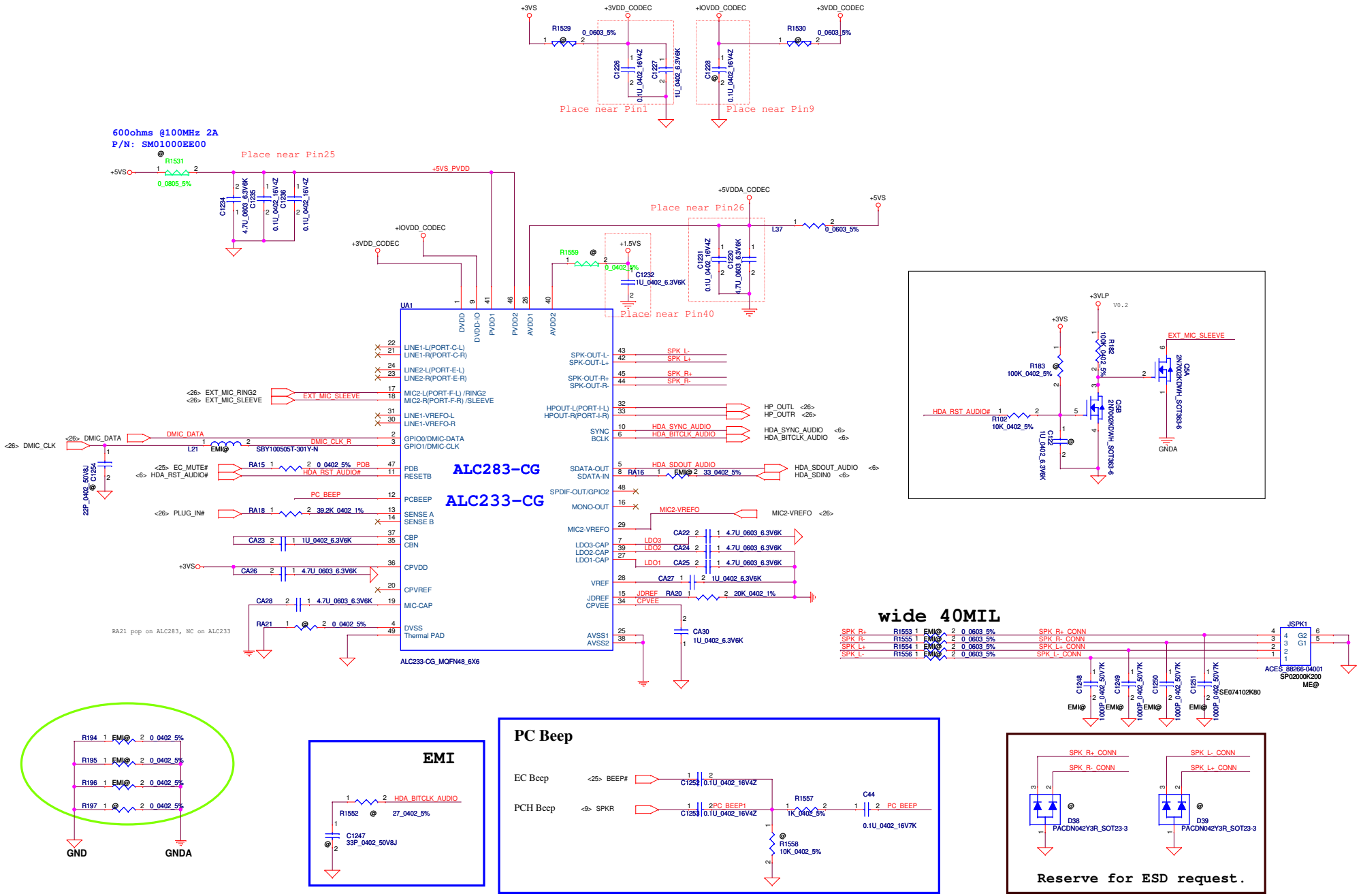


| Security Classification | Compal Secret Data | | |
|---|---|---|---|
| Issued Date | 2011/07/21 | Deciphered Date | 2012/12/31 |

THIS SHEET OF ENGINEERING DRAWING IS THE PROPRIETARY PROPERTY OF COMPAL ELECTRONICS, INC. AND CONTAINS CONFIDENTIAL AND TRADE SECRET INFORMATION. THIS SHEET MAY NOT BE TRANSFERED FROM THE CUSTODY OF THE COMPETENT DIVISION OF R&D DEPARTMENT EXCEPT AS AUTHORIZED BY COMPAL ELECTRONICS, INC. NEITHER THIS SHEET NOR THE INFORMATION IT CONTAINS MAY BE USED BY OR DISCLOSED TO ANY THIRD PARTY WITHOUT PRIOR WRITTEN CONSENT OF COMPAL ELECTRONICS, INC.

**Compal Electronics, Inc.**

Title: **HD Audio Codec_ALC259Q-VC**

Size: Custom | Document Number: **LA-A321PR02** | Rev: 0.2

Date: Thursday, March 14, 2013 | Sheet 23 of 46

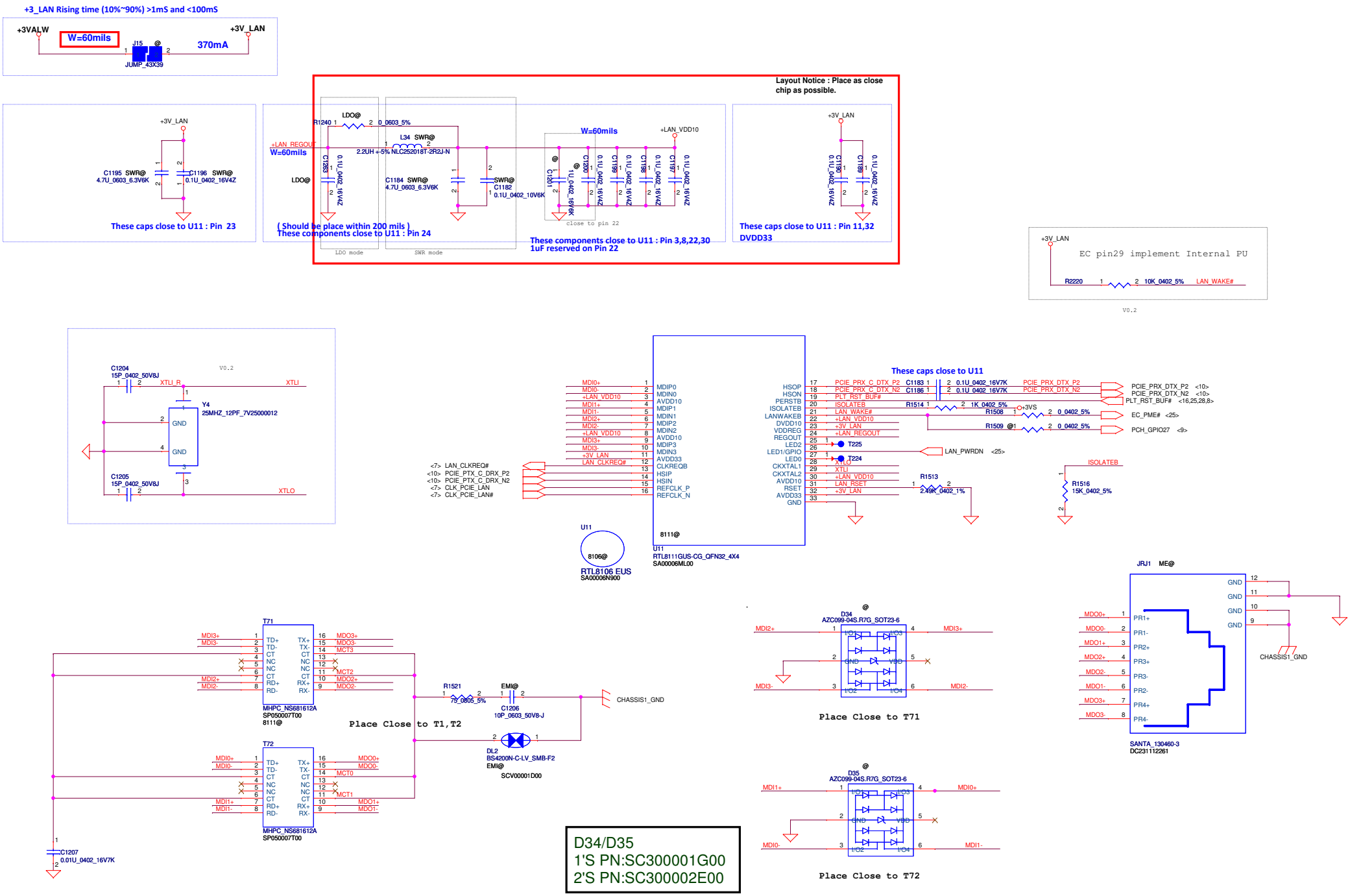


| Security Classification | Compal Secret Data | | |
|---|---|---|---|
| Issued Date | 2011/06/15 | Deciphered Date | 2012/07/11 |

THIS SHEET OF ENGINEERING DRAWING IS THE PROPRIETARY PROPERTY OF COMPAL ELECTRONICS, INC. AND CONTAINS CONFIDENTIAL AND TRADE SECRET INFORMATION. THIS SHEET MAY NOT BE TRANSFERED FROM THE CUSTODY OF THE COMPETENT DIVISION OF R&D DEPARTMENT EXCEPT AS AUTHORIZED BY COMPAL ELECTRONICS, INC. NEITHER THIS SHEET NOR THE INFORMATION IT CONTAINS MAY BE USED BY OR DISCLOSED TO ANY THIRD PARTY WITHOUT PRIOR WRITTEN CONSENT OF COMPAL ELECTRONICS, INC.

**Compal Electronics, Inc.**

Title: LAN-RTL8111GUS/8106EUS

Size: Custom | Document Number: LA-A321PR02 | Rev: 0.2

Date: Tuesday, March 19, 2013 | Sheet 24 of 46

| Vcc | 3.3V +/- 5% | | | | |
|---|---|---|---|---|---|
| R1562 | 100K +/- 5% | | | | |
| Board ID | R1564 | $V_{AD_BID}$ min | $V_{AD_BID}$ typ | $V_{AD_BID}$ max | |
| 0 | 0 | 0 V | 0 V | 0 V | MP |
| 1 | 8.2K +/- 5% | 0.216 V | 0.250 V | 0.289 V | PVT |
| 2 | 18K +/- 5% | 0.436 V | 0.503 V | 0.538 V | DVT V0.2 |
| 3 | 33K +/- 5% | 0.712 V | 0.819 V | 0.875 V | EVT V0.1 |

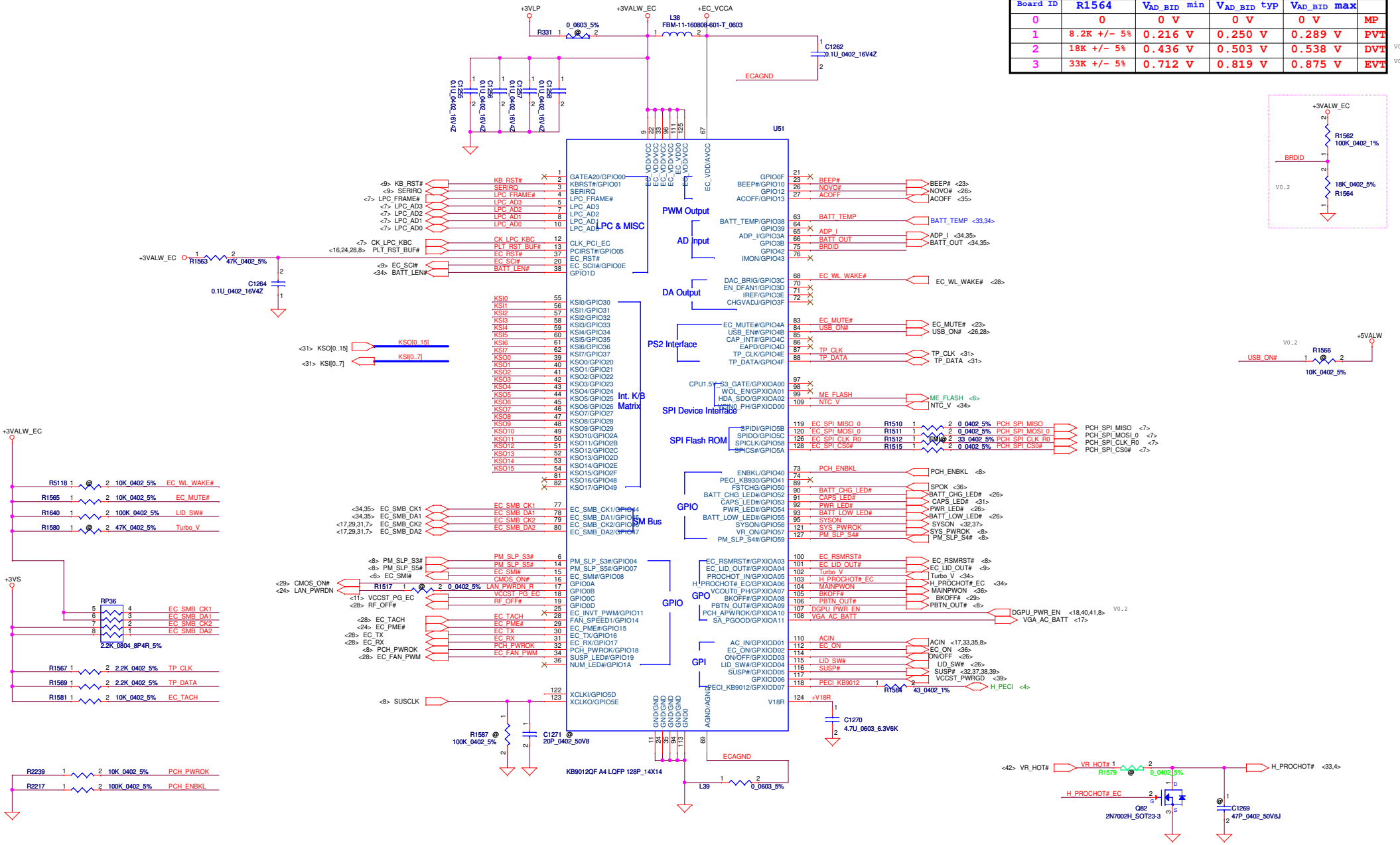


| Security Classification | Compal Secret Data | | |
|---|---|---|---|
| Issued Date | 2011/06/15 | Deciphered Date | 2012/07/11 |

THIS SHEET OF ENGINEERING DRAWING IS THE PROPRIETARY PROPERTY OF COMPAL ELECTRONICS, INC. AND CONTAINS CONFIDENTIAL AND TRADE SECRET INFORMATION. THIS SHEET MAY NOT BE TRANSFERED FROM THE CUSTODY OF THE COMPETENT DIVISION OF R&D DEPARTMENT EXCEPT AS AUTHORIZED BY COMPAL ELECTRONICS, INC. NEITHER THIS SHEET NOR THE INFORMATION IT CONTAINS MAY BE USED BY OR DISCLOSED TO ANY THIRD PARTY WITHOUT PRIOR WRITTEN CONSENT OF COMPAL ELECTRONICS, INC.

**Compal Electronics, Inc.**

Title: **BIOS & EC I/O Port**

Size: Custom | Document Number: **LA-A321PR02** | Rev: 0.2

Date: Thursday, March 14, 2013 | Sheet 25 of 46

# I/O Board CONN.

Connector: 0.3A / pin

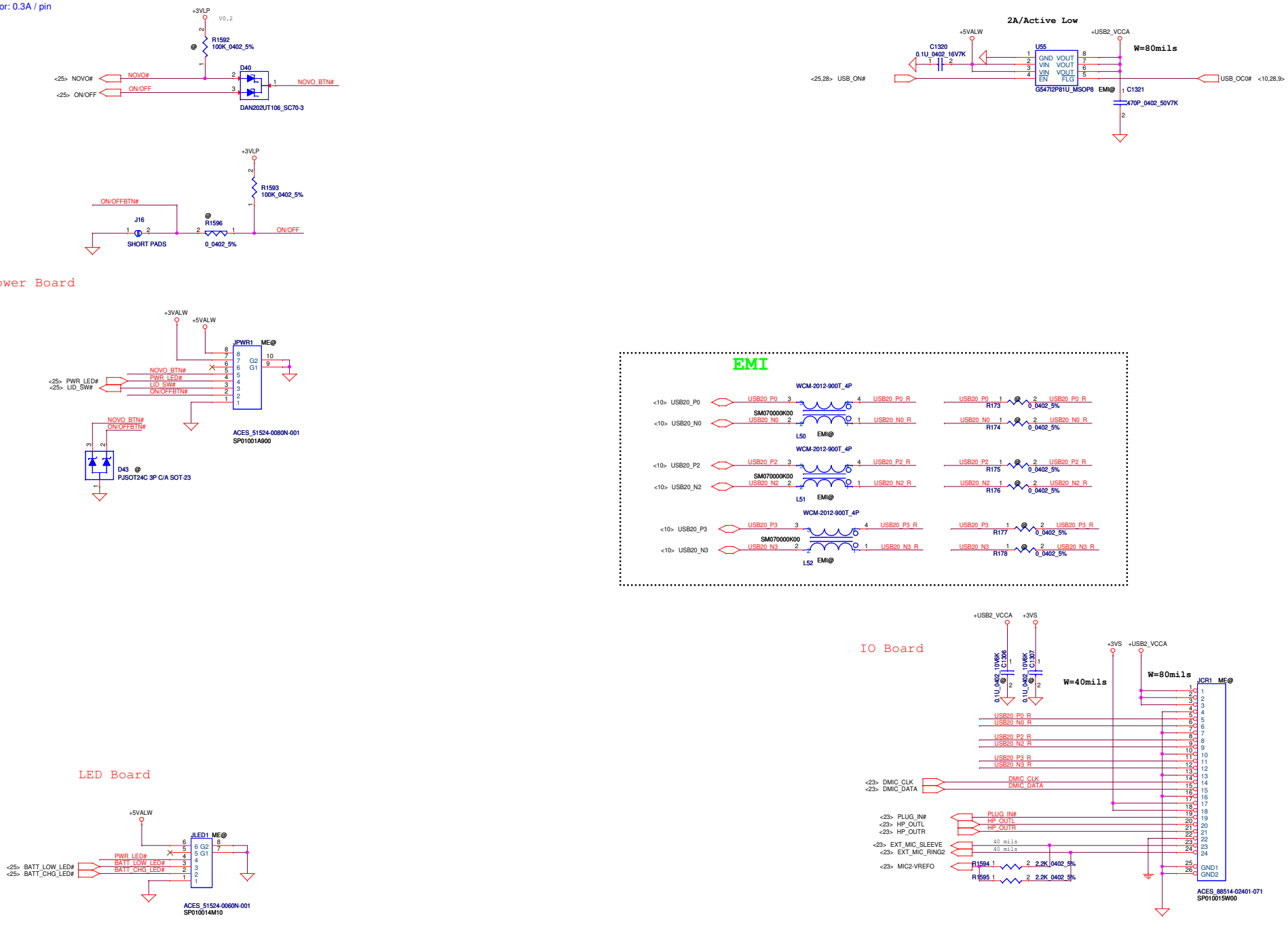


| Security Classification | Compal Secret Data | | |
|---|---|---|---|
| Issued Date | 2011/06/15 | Deciphered Date | 2012/07/11 |

THIS SHEET OF ENGINEERING DRAWING IS THE PROPRIETARY PROPERTY OF COMPAL ELECTRONICS, INC. AND CONTAINS CONFIDENTIAL AND TRADE SECRET INFORMATION. THIS SHEET MAY NOT BE TRANSFERED FROM THE CUSTODY OF THE COMPETENT DIVISION OF R&D DEPARTMENT EXCEPT AS AUTHORIZED BY COMPAL ELECTRONICS, INC. NEITHER THIS SHEET NOR THE INFORMATION IT CONTAINS MAY BE USED BY OR DISCLOSED TO ANY THIRD PARTY WITHOUT PRIOR WRITTEN CONSENT OF COMPAL ELECTRONICS, INC.

Compal Electronics, Inc.

Title: ROM/KBD/PWR/CR/LED/TP Conn.

Size: C | Document Number: LA-A321PR02 | Rev: 0.2

Date: Thursday, March 14, 2013 | Sheet 26 of 46

## mSATA CONN.

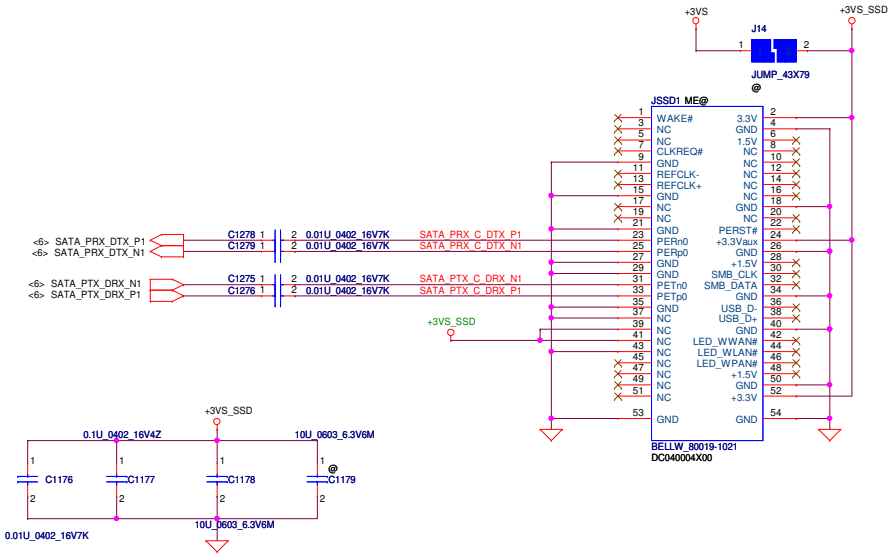


## SATA HDD CONN.

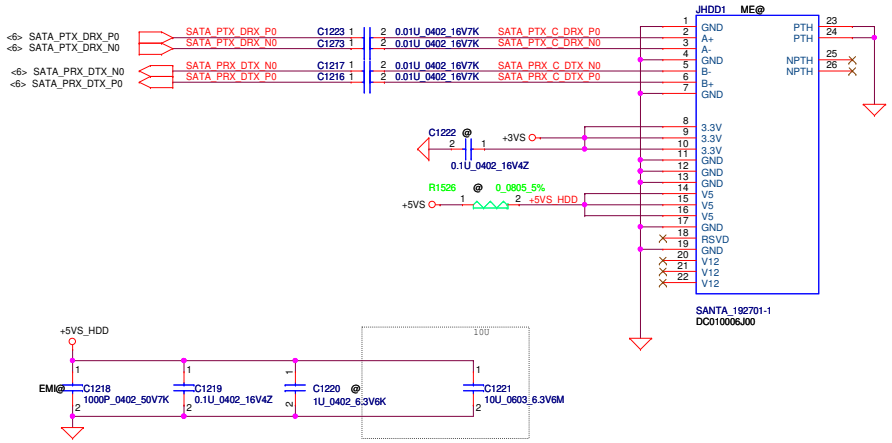


| Security Classification | Compal Secret Data | | |
|---|---|---|---|
| Issued Date | 2011/06/15 | Deciphered Date | 2012/07/11 |

THIS SHEET OF ENGINEERING DRAWING IS THE PROPRIETARY PROPERTY OF COMPAL ELECTRONICS, INC. AND CONTAINS CONFIDENTIAL AND TRADE SECRET INFORMATION. THIS SHEET MAY NOT BE TRANSFERED FROM THE CUSTODY OF THE COMPETENT DIVISION OF R&D DEPARTMENT EXCEPT AS AUTHORIZED BY COMPAL ELECTRONICS, INC. NEITHER THIS SHEET NOR THE INFORMATION IT CONTAINS MAY BE USED BY OR DISCLOSED TO ANY THIRD PARTY WITHOUT PRIOR WRITTEN CONSENT OF COMPAL ELECTRONICS, INC.

**Compal Electronics, Inc.**

Title: **HDD/ODD/BT Connector**

Size: Custom | Document Number: **LA-A321PR02** | Rev: 0.2

Date: Thursday, March 14, 2013 | Sheet 27 of 46

## USB 3.0 Charger & Conn.

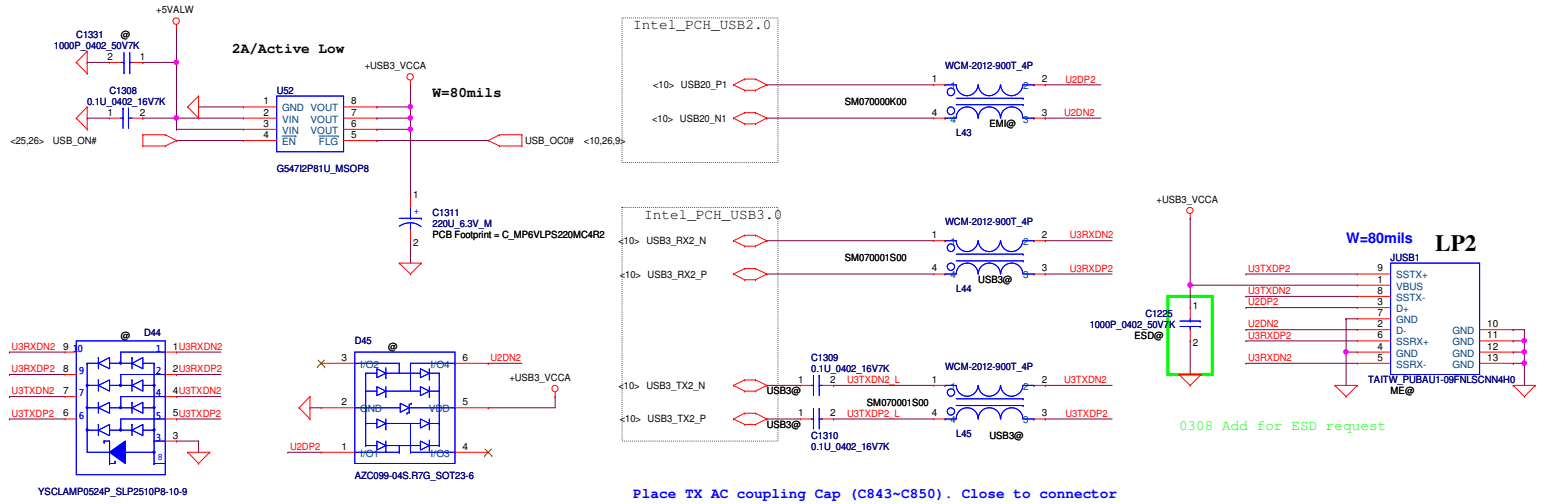


## FAN CONN.

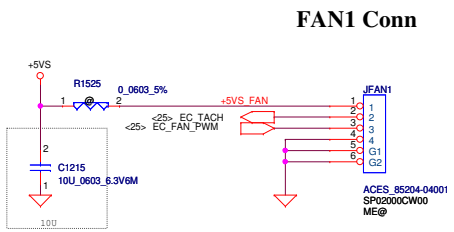


## Mini-Express Card for WLAN(Half)

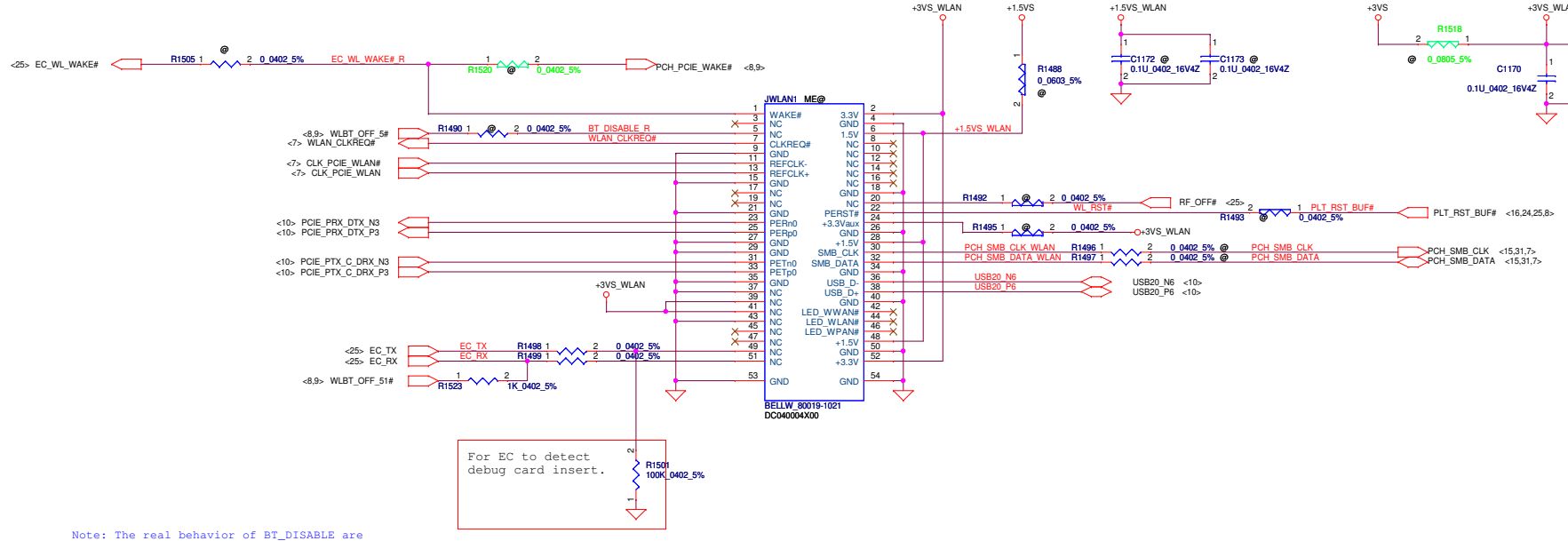


Note: The real behavior of BT_DISABLE are
BT_DISABLE=LOW, BT=OFF
BT_DISABLE=HIGH, BT=ON

| Security Classification | Compal Secret Data | | |
|---|---|---|---|
| Issued Date | 2011/07/21 | Deciphered Date | 2012/12/31 |

THIS SHEET OF ENGINEERING DRAWING IS THE PROPRIETARY PROPERTY OF COMPAL ELECTRONICS, INC. AND CONTAINS CONFIDENTIAL AND TRADE SECRET INFORMATION. THIS SHEET MAY NOT BE TRANSFERED FROM THE CUSTODY OF THE COMPETENT DIVISION OF R&D DEPARTMENT EXCEPT AS AUTHORIZED BY COMPAL ELECTRONICS, INC. NEITHER THIS SHEET NOR THE INFORMATION IT CONTAINS MAY BE USED BY OR DISCLOSED TO ANY THIRD PARTY WITHOUT PRIOR WRITTEN CONSENT OF COMPAL ELECTRONICS, INC.

| | |
|---|---|
| Compal Electronics, Inc. | |
| Title | Mini-Card |
| Size | Document Number: LA-A321PR02 — Rev 0.2 |
| Date: Thursday, March 14, 2013 | Sheet 28 of 46 |

RTD2132R LDO MODE

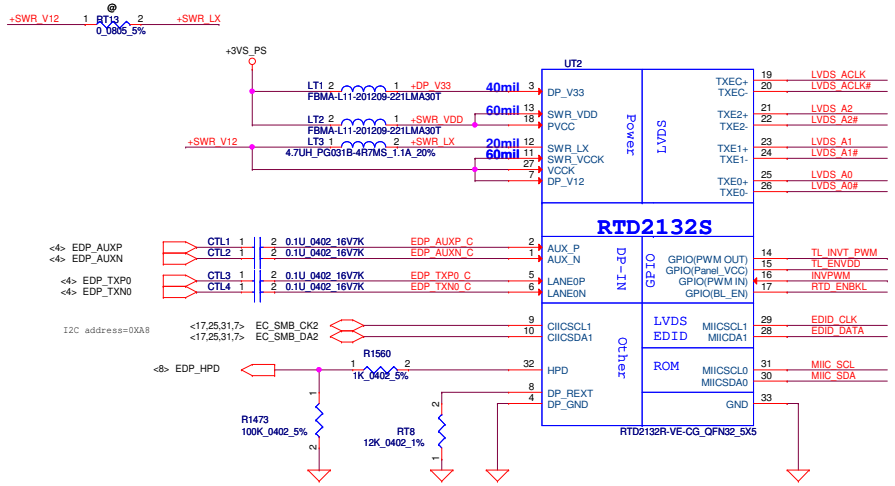


| MIIC_SCL \ MIIC_SDA | 0 | 1 |
|---|---|---|
| 0 | X | EC CODE |
| 1 | Internal ROM | EEPROM |

TL_ENVDD need 60 mil if use for LVDS power on R version

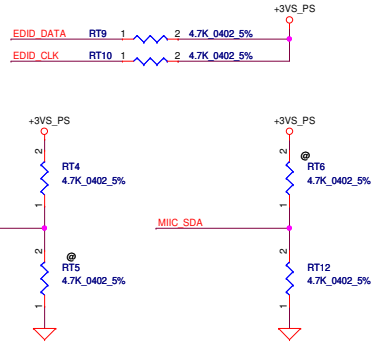


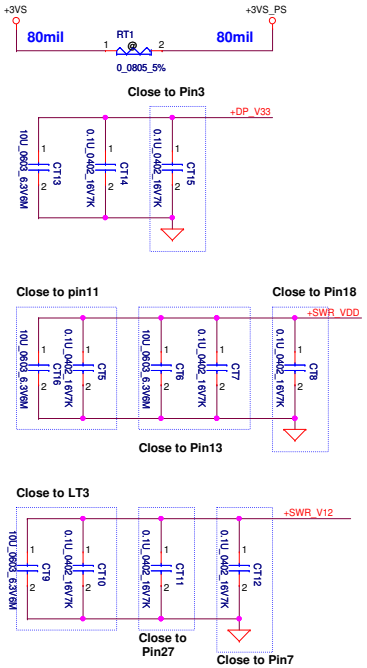


## LCD POWER CIRCUIT

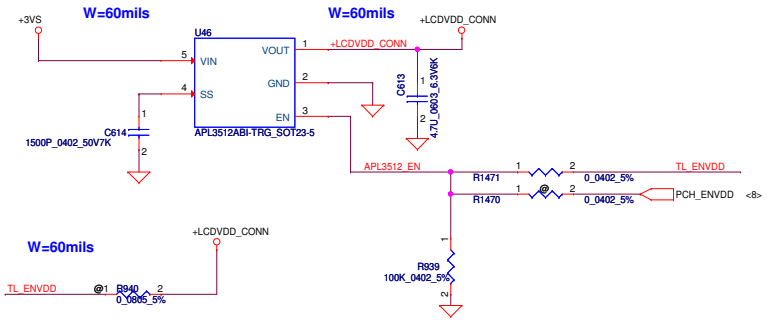


RTD2132R Internal load switch for +LCD_VCC




## VGA LCD/PANEL BD. Conn.

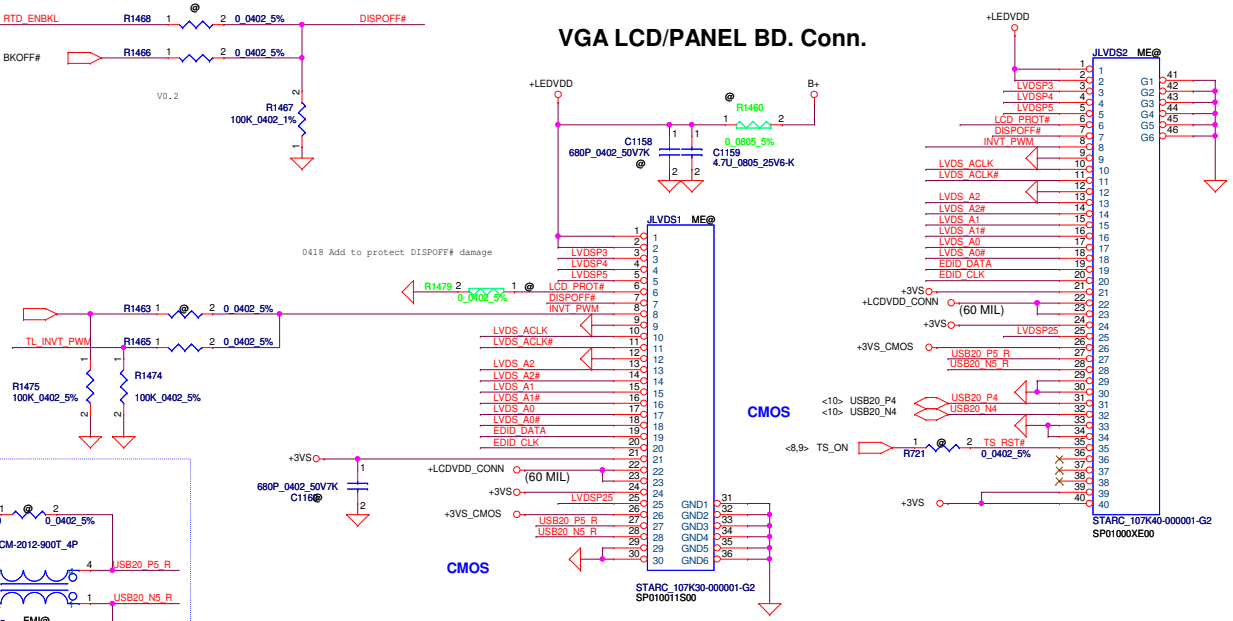


## CMOS Camera

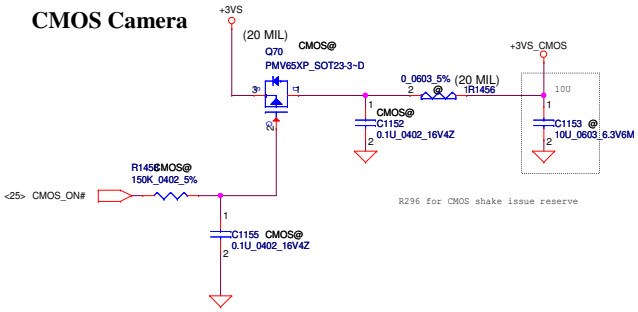


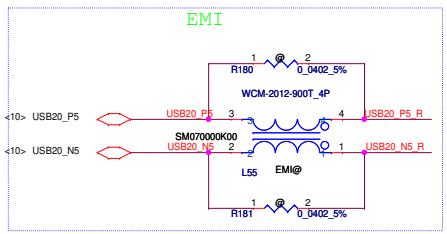


| Security Classification | Compal Secret Data | | |
|---|---|---|---|
| Issued Date | 2011/06/15 | Deciphered Date | 2012/07/11 |

THIS SHEET OF ENGINEERING DRAWING IS THE PROPRIETARY PROPERTY OF COMPAL ELECTRONICS, INC. AND CONTAINS CONFIDENTIAL AND TRADE SECRET INFORMATION. THIS SHEET MAY NOT BE TRANSFERED FROM THE CUSTODY OF THE COMPETENT DIVISION OF R&D DEPARTMENT EXCEPT AS AUTHORIZED BY COMPAL ELECTRONICS, INC. NEITHER THIS SHEET NOR THE INFORMATION IT CONTAINS MAY BE USED BY OR DISCLOSED TO ANY THIRD PARTY WITHOUT PRIOR WRITTEN CONSENT OF COMPAL ELECTRONICS, INC.

Compal Electronics, Inc.

Title: LVDS/CAMERA

Size: Custom | Document Number: LA-A321PR02 | Rev: 0.2

Date: Thursday, March 14, 2013 | Sheet 29 of 46

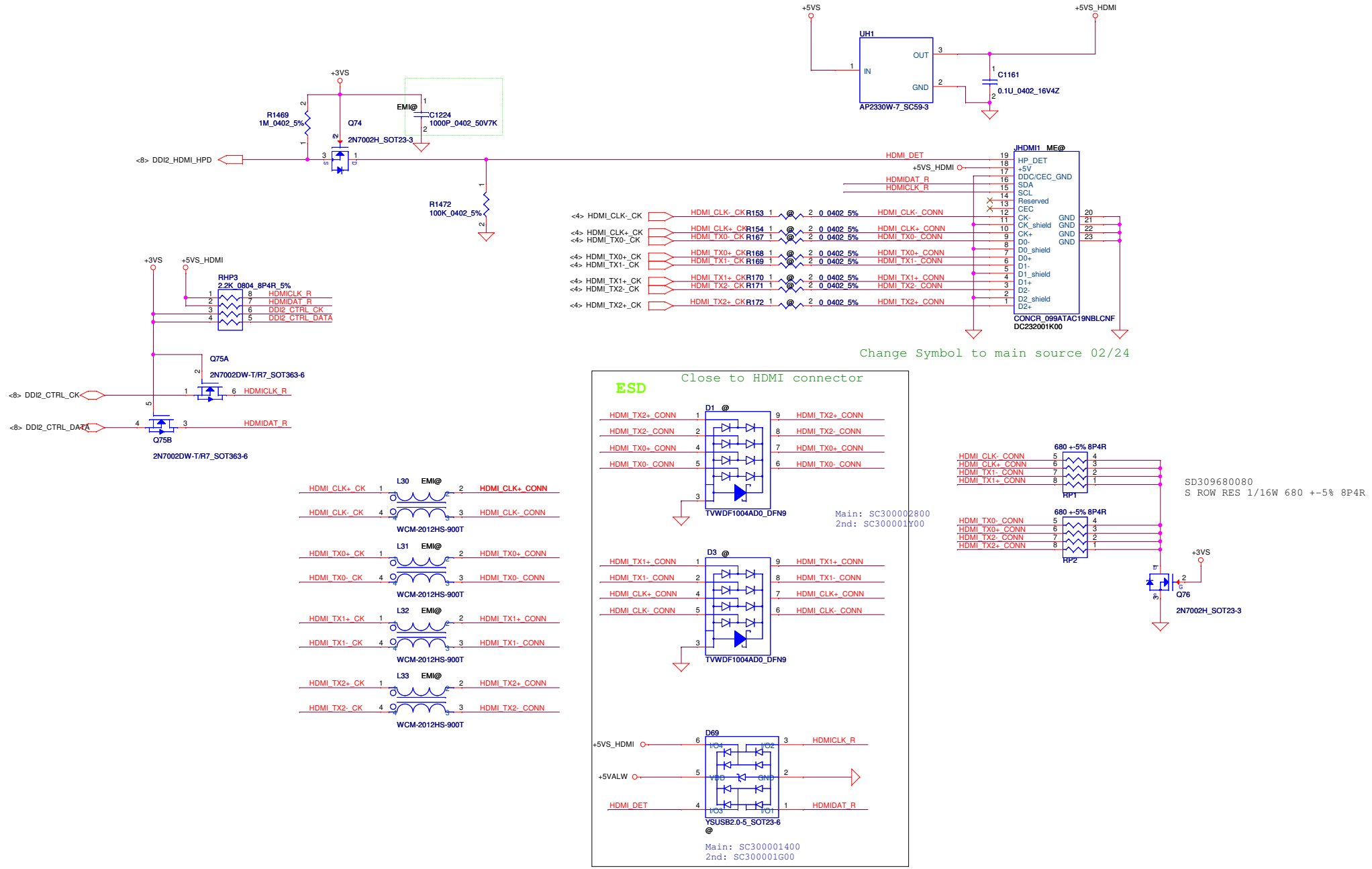


| Security Classification | Compal Secret Data | | | Compal Electronics, Inc. |
|---|---|---|---|---|
| Issued Date | 2011/06/15 | Deciphered Date | 2012/07/11 | Title: HDMI CONN |
| THIS SHEET OF ENGINEERING DRAWING IS THE PROPRIETARY PROPERTY OF COMPAL ELECTRONICS, INC. AND CONTAINS CONFIDENTIAL AND TRADE SECRET INFORMATION. THIS SHEET MAY NOT BE TRANSFERED FROM THE CUSTODY OF THE COMPETENT DIVISION OF R&D DEPARTMENT EXCEPT AS AUTHORIZED BY COMPAL ELECTRONICS, INC. NEITHER THIS SHEET NOR THE INFORMATION IT CONTAINS MAY BE USED BY OR DISCLOSED TO ANY THIRD PARTY WITHOUT PRIOR WRITTEN CONSENT OF COMPAL ELECTRONICS, INC. | | | | Size: Custom; Document Number: LA-A321PR02; Rev: 0.2 |
| | | | | Date: Thursday, March 14, 2013; Sheet 30 of 46 |

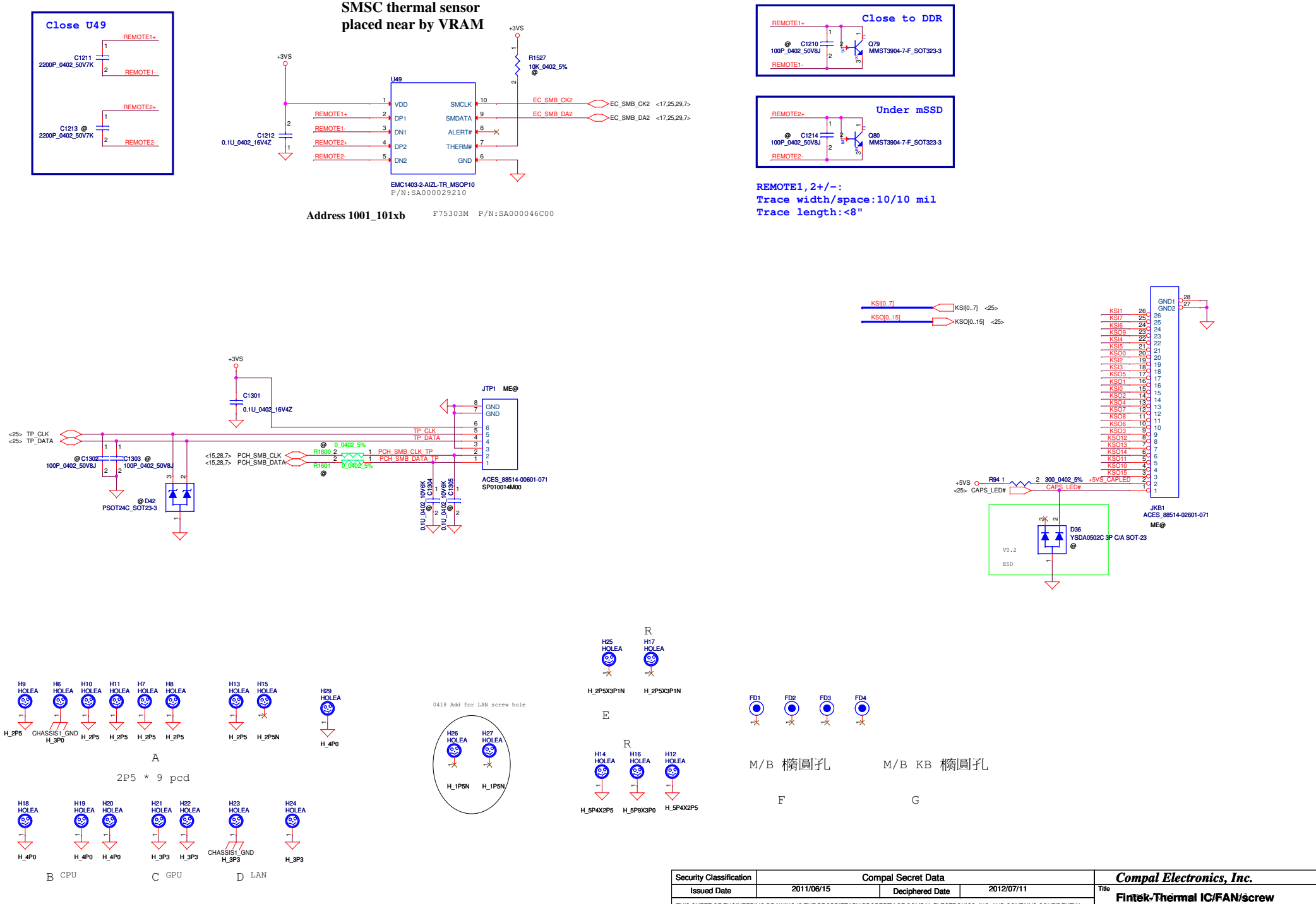


| Security Classification | Compal Secret Data | | |
|---|---|---|---|
| Issued Date | 2011/06/15 | Deciphered Date | 2012/07/11 |

THIS SHEET OF ENGINEERING DRAWING IS THE PROPRIETARY PROPERTY OF COMPAL ELECTRONICS, INC. AND CONTAINS CONFIDENTIAL AND TRADE SECRET INFORMATION. THIS SHEET MAY NOT BE TRANSFERED FROM THE CUSTODY OF THE COMPETENT DIVISION OF R&D DEPARTMENT EXCEPT AS AUTHORIZED BY COMPAL ELECTRONICS, INC. NEITHER THIS SHEET NOR THE INFORMATION IT CONTAINS MAY BE USED BY OR DISCLOSED TO ANY THIRD PARTY WITHOUT PRIOR WRITTEN CONSENT OF COMPAL ELECTRONICS, INC.

**Compal Electronics, Inc.**

Title: Fintek-Thermal IC/FAN/screw

Size: Custom | Document Number: LA-A321PR02 | Rev: 0.2

Date: Tuesday, March 19, 2013 | Sheet 31 of 46

## +5VALW TO +5VS
## +3VALW TO +3VS

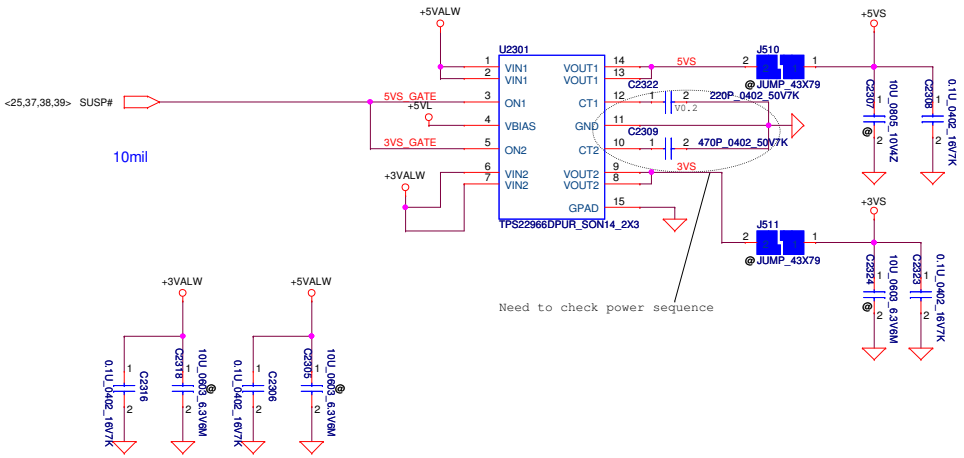


## +3VALW TO +3VALW(PCH AUX Power)
## +5VALW TO +5VALW(PCH AUX Power)

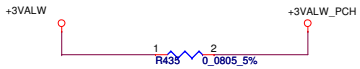


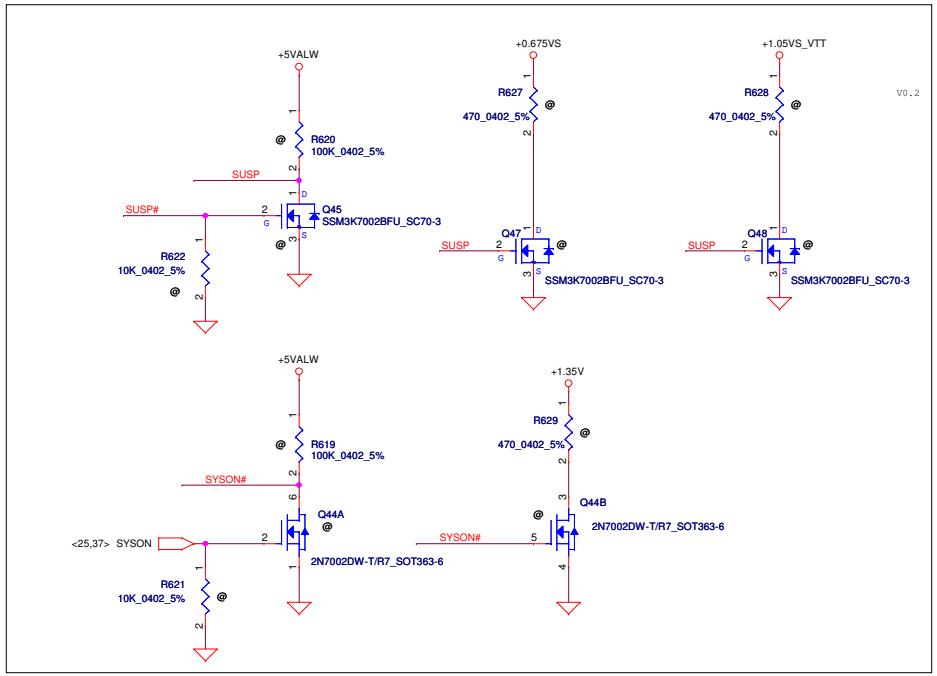


| Security Classification | Compal Secret Data | | |
|---|---|---|---|
| Issued Date | 2011/06/15 | Deciphered Date | 2012/07/11 |

THIS SHEET OF ENGINEERING DRAWING IS THE PROPRIETARY PROPERTY OF COMPAL ELECTRONICS, INC. AND CONTAINS CONFIDENTIAL AND TRADE SECRET INFORMATION. THIS SHEET MAY NOT BE TRANSFERED FROM THE CUSTODY OF THE COMPETENT DIVISION OF R&D DEPARTMENT EXCEPT AS AUTHORIZED BY COMPAL ELECTRONICS, INC. NEITHER THIS SHEET NOR THE INFORMATION IT CONTAINS MAY BE USED BY OR DISCLOSED TO ANY THIRD PARTY WITHOUT PRIOR WRITTEN CONSENT OF COMPAL ELECTRONICS, INC.

**Compal Electronics, Inc.**

Title: DC Interface

Size: Custom | Document Number: LA-A321PR02 | Rev: 0.2

Date: Thursday, March 14, 2013 | Sheet 32 of 46

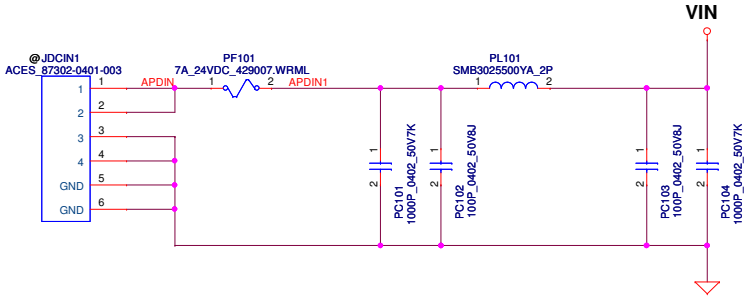


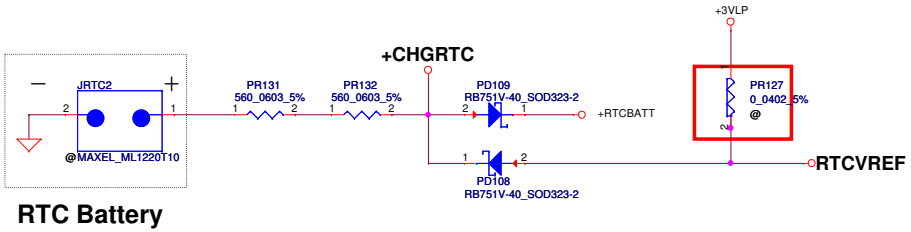


RTC Battery

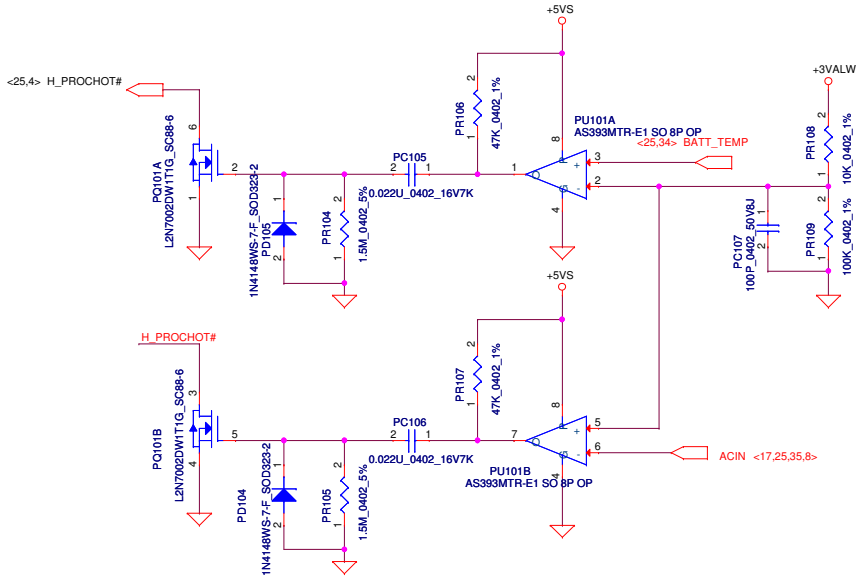


| Security Classification | Compal Secret Data | | |
|---|---|---|---|
| Issued Date | 2010/01/25 | Deciphered Date | 2012/07/11 |

THIS SHEET OF ENGINEERING DRAWING IS THE PROPRIETARY PROPERTY OF COMPAL ELECTRONICS, INC. AND CONTAINS CONFIDENTIAL AND TRADE SECRET INFORMATION. THIS SHEET MAY NOT BE TRANSFERED FROM THE CUSTODY OF THE COMPETENT DIVISION OF R&D DEPARTMENT EXCEPT AS AUTHORIZED BY COMPAL ELECTRONICS, INC. NEITHER THIS SHEET NOR THE INFORMATION IT CONTAINS MAY BE USED BY OR DISCLOSED TO ANY THIRD PARTY WITHOUT PRIOR WRITTEN CONSENT OF COMPAL ELECTRONICS, INC.

Compal Electronics, Inc.

Title: PWR DCIN

Size: Custom | Document Number: LA-A321PR01 | Rev: 0.2

Date: Thursday, March 14, 2013 | Sheet 33 of 46

**JBATT1 Just for 13.3"**
**JBATT2 Just for 14"**

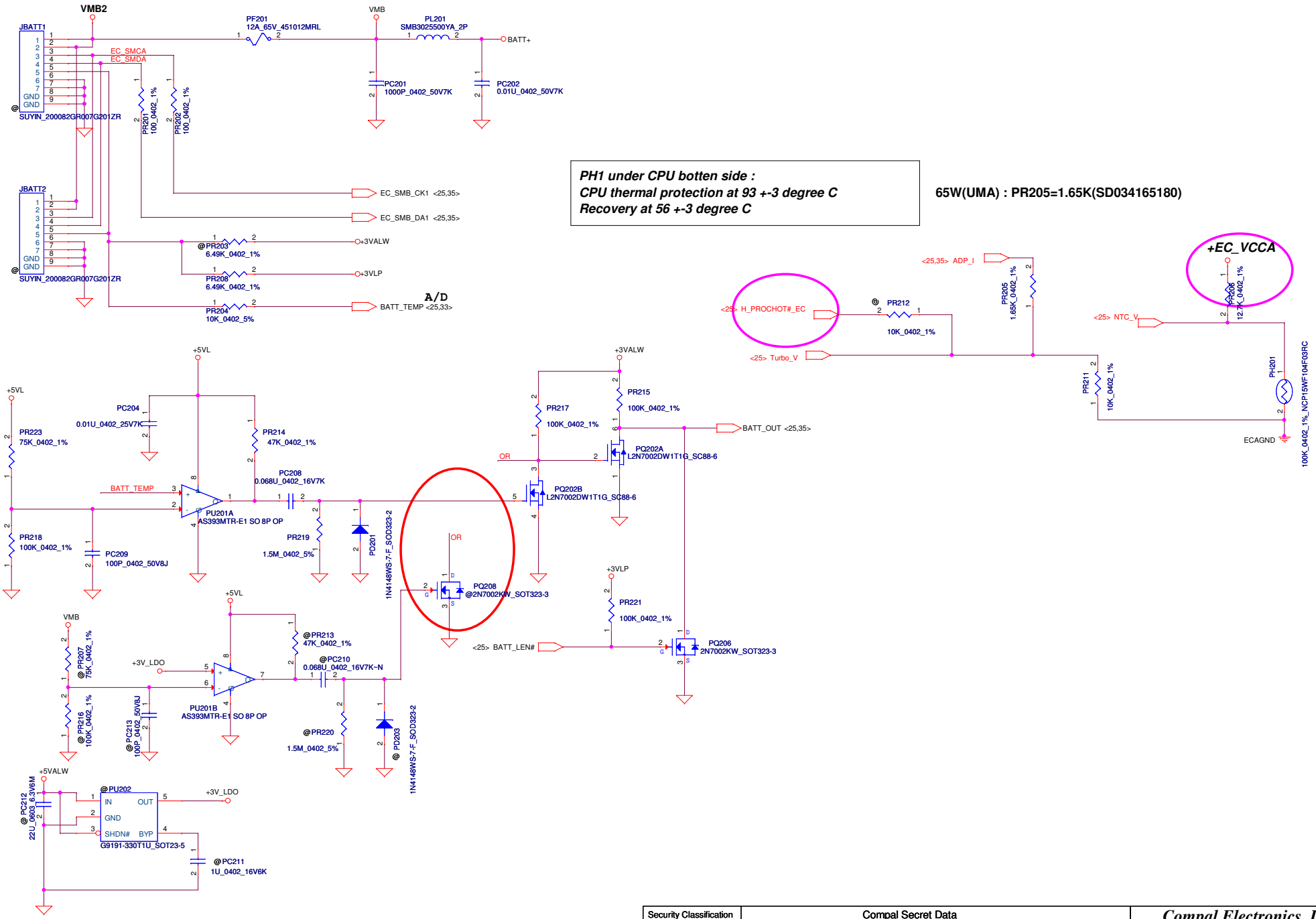


| Security Classification | Compal Secret Data | | |
|---|---|---|---|
| Issued Date | 2010/01/25 | Deciphered Date | 2012/07/11 |

THIS SHEET OF ENGINEERING DRAWING IS THE PROPRIETARY PROPERTY OF COMPAL ELECTRONICS, INC. AND CONTAINS CONFIDENTIAL AND TRADE SECRET INFORMATION. THIS SHEET MAY NOT BE TRANSFERED FROM THE CUSTODY OF THE COMPETENT DIVISION OF R&D DEPARTMENT EXCEPT AS AUTHORIZED BY COMPAL ELECTRONICS, INC. NEITHER THIS SHEET NOR THE INFORMATION IT CONTAINS MAY BE USED BY OR DISCLOSED TO ANY THIRD PARTY WITHOUT PRIOR WRITTEN CONSENT OF COMPAL ELECTRONICS, INC.

**Compal Electronics, Inc.**

Title: **PWR-BATTERY CONN/OTP**

Size: B/26 Custom | Document Number: **LA-A321PR01** | Rev: 0.2

Date: Thursday, March 14, 2013 | Sheet 34 of 46

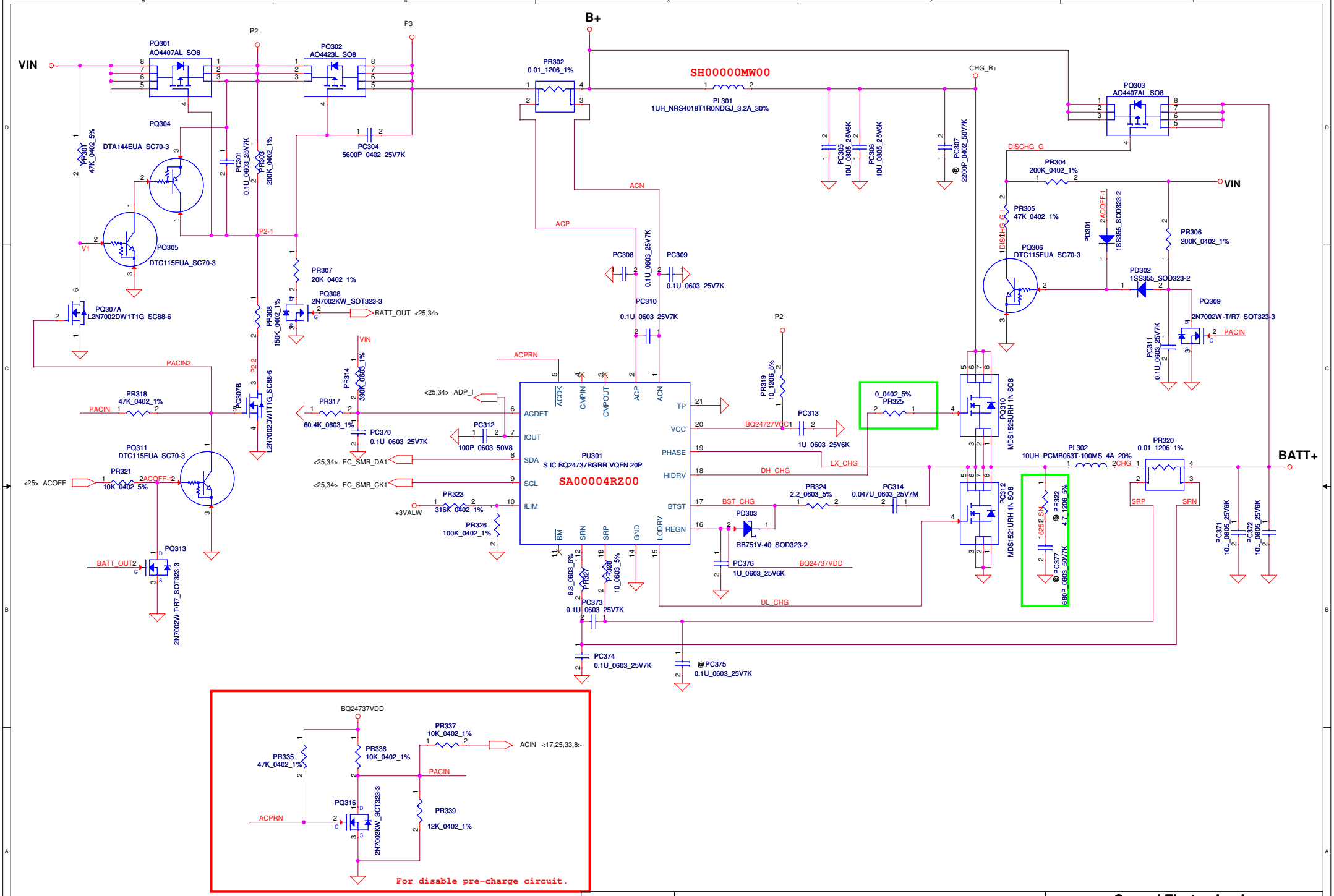


| Security Classification | Compal Secret Data | | |
|---|---|---|---|
| Issued Date | 2010/01/13 | Deciphered Date | 2012/07/11 |

THIS SHEET OF ENGINEERING DRAWING IS THE PROPRIETARY PROPERTY OF COMPAL ELECTRONICS, INC. AND CONTAINS CONFIDENTIAL AND TRADE SECRET INFORMATION. THIS SHEET MAY NOT BE TRANSFERED FROM THE CUSTODY OF THE COMPETENT DIVISION OF R&D DEPARTMENT EXCEPT AS AUTHORIZED BY COMPAL ELECTRONICS, INC. NEITHER THIS SHEET NOR THE INFORMATION IT CONTAINS MAY BE USED BY OR DISCLOSED TO ANY THIRD PARTY WITHOUT PRIOR WRITTEN CONSENT OF COMPAL ELECTRONICS, INC.

**Compal Electronics, Inc.**

Title: **CHARGER**

Size: | Document Number: **LA-A321PR01** | Rev: 0.2

Date: Thursday, March 14, 2013 | Sheet 35 of 46

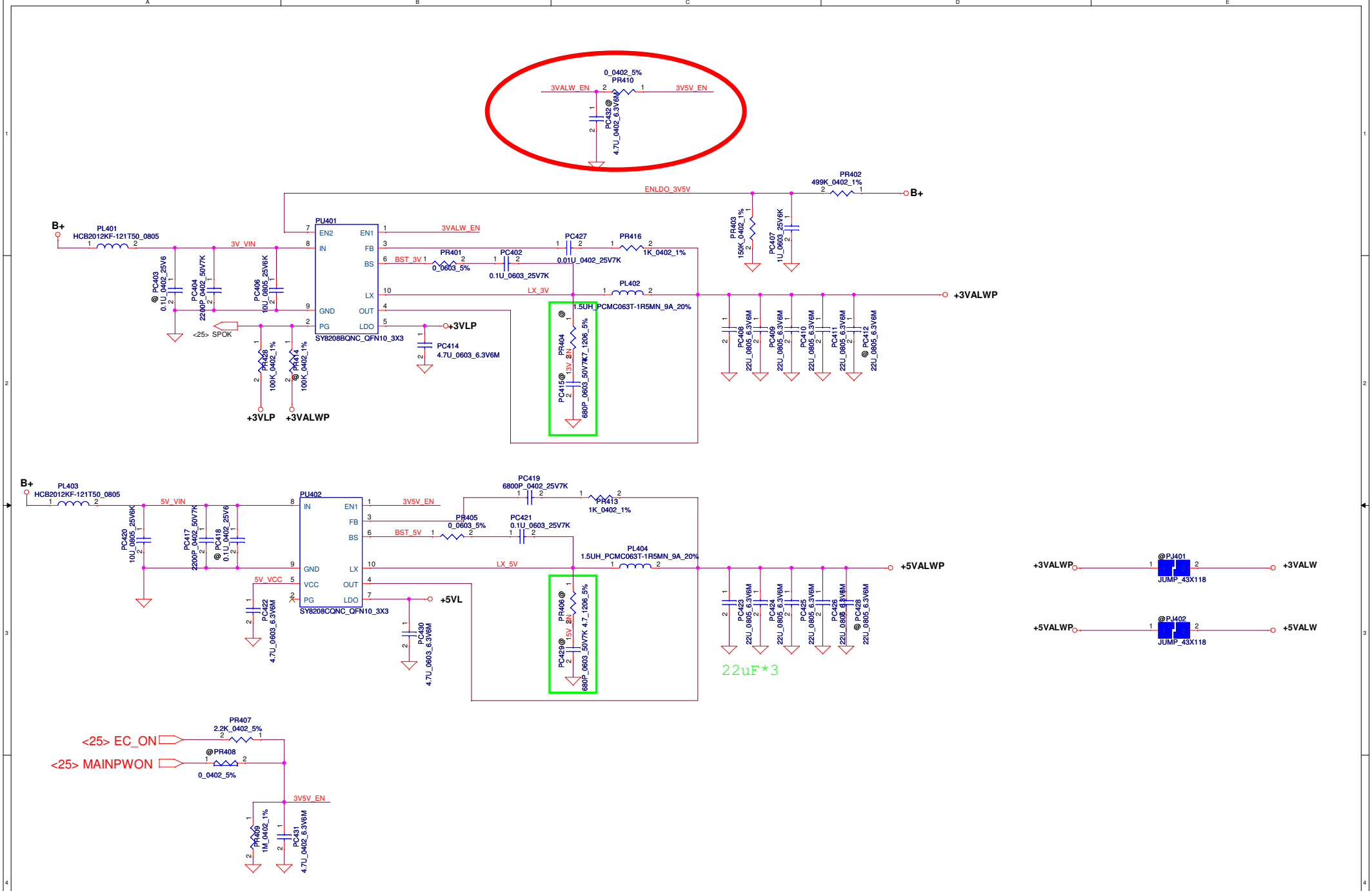


| | | | |
|---|---|---|---|
| Security Classification | Compal Secret Data | | Compal Electronics, Inc. |
| Issued Date | 2011/06/15 | Deciphered Date 2012/07/11 | Title +3VALW/+5VALW |
| THIS SHEET OF ENGINEERING DRAWING IS THE PROPRIETARY PROPERTY OF COMPAL ELECTRONICS, INC. AND CONTAINS CONFIDENTIAL AND TRADE SECRET INFORMATION. THIS SHEET MAY NOT BE TRANSFERED FROM THE CUSTODY OF THE COMPETENT DIVISION OF R&D DEPARTMENT EXCEPT AS AUTHORIZED BY COMPAL ELECTRONICS, INC. NEITHER THIS SHEET NOR THE INFORMATION IT CONTAINS MAY BE USED BY OR DISCLOSED TO ANY THIRD PARTY WITHOUT PRIOR WRITTEN CONSENT OF COMPAL ELECTRONICS, INC. | | | Size Custom / Document Number LA-A321PR01 / Rev 0.2 |
| | | | Date: Thursday, March 14, 2013 / Sheet 36 of 46 |

| STATE | S3 | S5 | 1.5VP | VTT_REFP | 0.75VSP |
|---|---|---|---|---|---|
| S0 | Hi | Hi | On | On | On |
| S3 | Lo | Hi | On | On | Off (Hi-Z) |
| S4/S5 | Lo | Lo | Off | Off | Off |
| Note: S3 - sleep ; S5 - power off | | | | | |

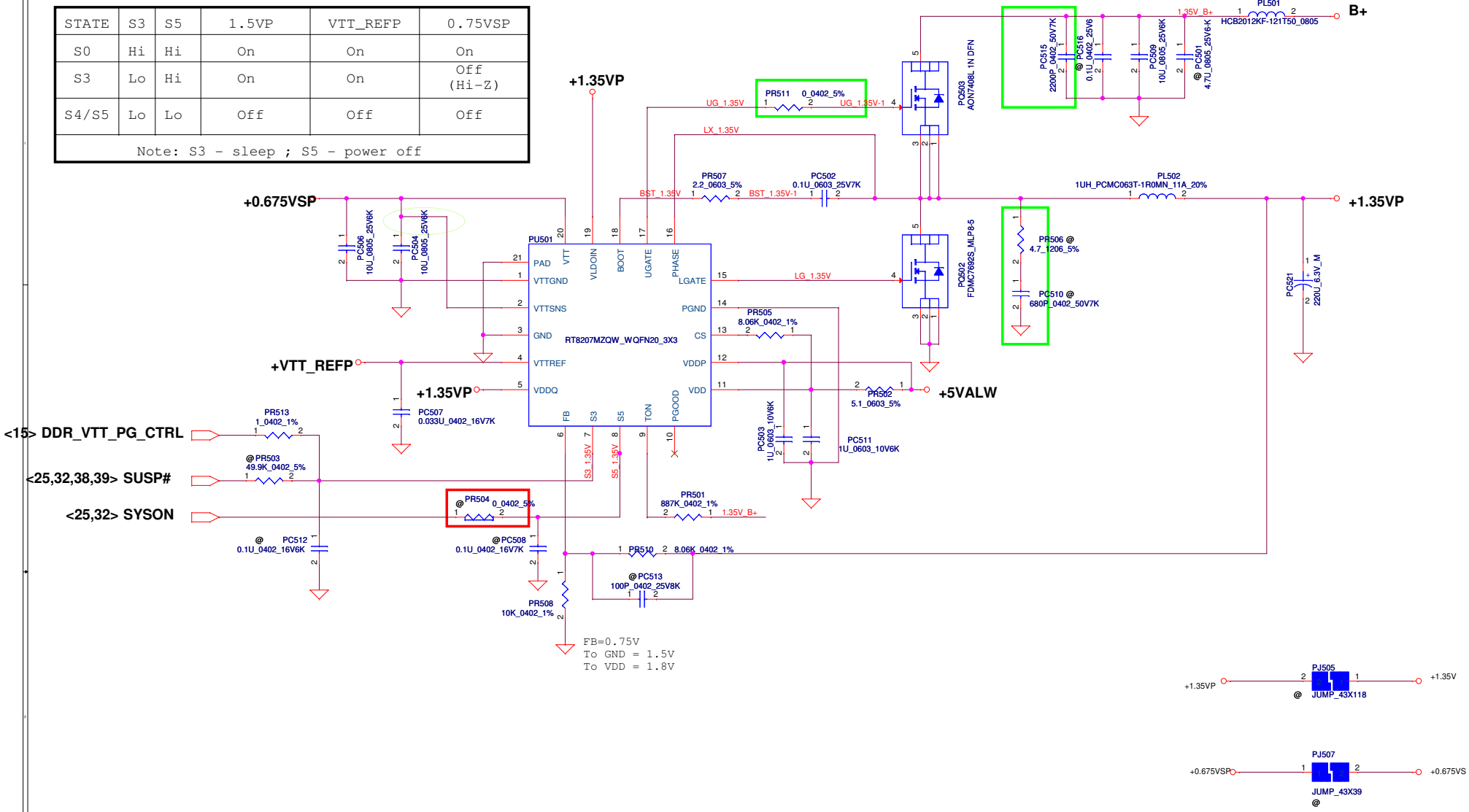


| Security Classification | Compal Secret Data | | |
|---|---|---|---|
| Issued Date | 2010/01/25 | Deciphered Date | 2012/07/11 |

THIS SHEET OF ENGINEERING DRAWING IS THE PROPRIETARY PROPERTY OF COMPAL ELECTRONICS, INC. AND CONTAINS CONFIDENTIAL AND TRADE SECRET INFORMATION. THIS SHEET MAY NOT BE TRANSFERED FROM THE CUSTODY OF THE COMPETENT DIVISION OF R&D DEPARTMENT EXCEPT AS AUTHORIZED BY COMPAL ELECTRONICS, INC. NEITHER THIS SHEET NOR THE INFORMATION IT CONTAINS MAY BE USED BY OR DISCLOSED TO ANY THIRD PARTY WITHOUT PRIOR WRITTEN CONSENT OF COMPAL ELECTRONICS, INC.

*Compal Electronics, Inc.*

Title: ***PWR-+1.5VP/+1.8VSP***

Size: Custom | Document Number: **LA-A321PR01** | Rev: 0.2

Date: Thursday, March 14, 2013 | Sheet 37 of 46

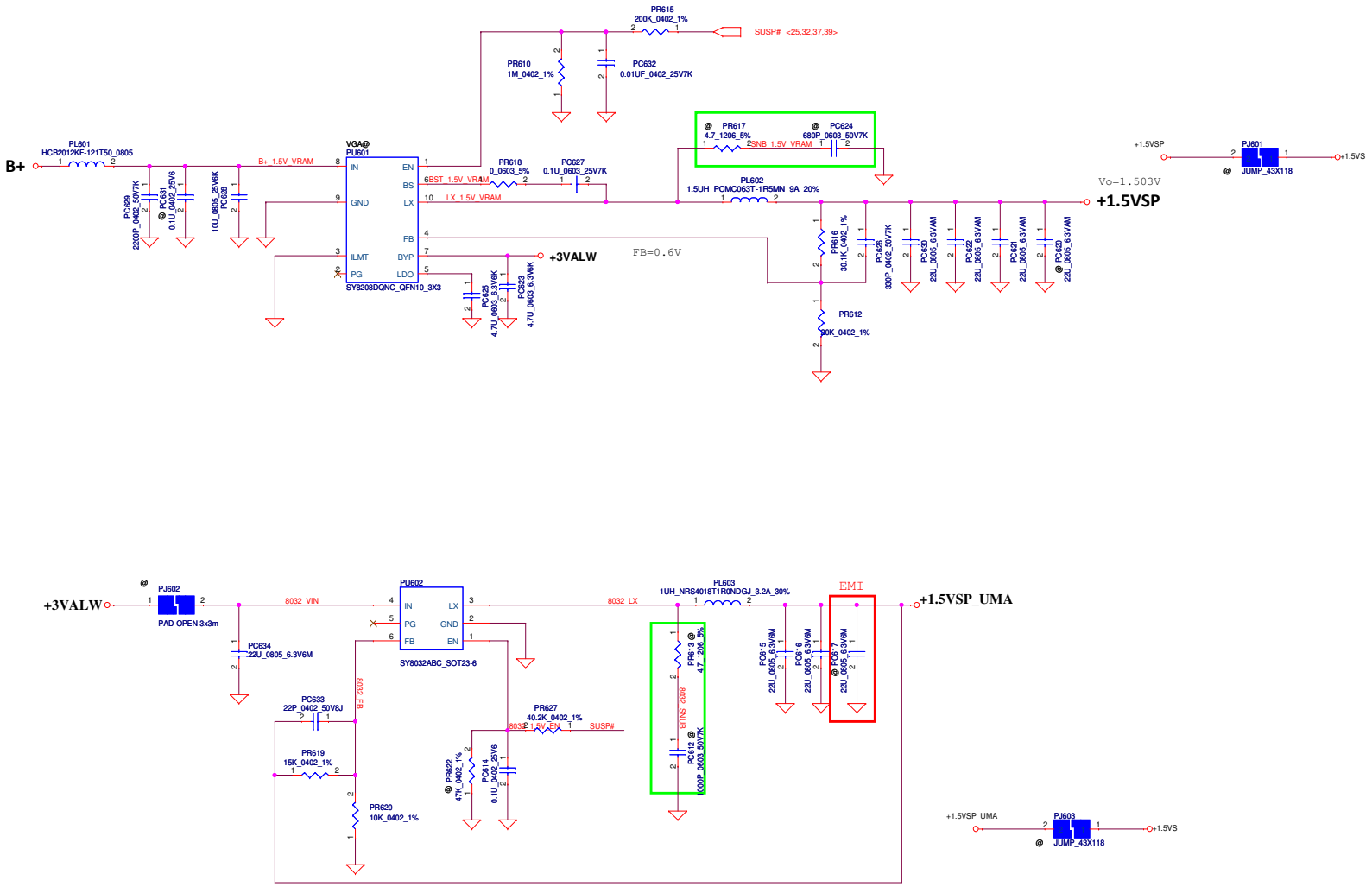


| Security Classification | Compal Secret Data | | |
|---|---|---|---|
| Issued Date | 2011/06/15 | Deciphered Date | 2012/07/11 |

THIS SHEET OF ENGINEERING DRAWING IS THE PROPRIETARY PROPERTY OF COMPAL ELECTRONICS, INC. AND CONTAINS CONFIDENTIAL AND TRADE SECRET INFORMATION. THIS SHEET MAY NOT BE TRANSFERED FROM THE CUSTODY OF THE COMPETENT DIVISION OF R&D DEPARTMENT EXCEPT AS AUTHORIZED BY COMPAL ELECTRONICS, INC. NEITHER THIS SHEET NOR THE INFORMATION IT CONTAINS MAY BE USED BY OR DISCLOSED TO ANY THIRD PARTY WITHOUT PRIOR WRITTEN CONSENT OF COMPAL ELECTRONICS, INC.

*Compal Electronics, Inc.*

Title: **+1.5VSP(VRAM)**

Size: C | Document Number: LA-A321PR01 | Rev: 0.2

Date: Thursday, March 14, 2013 | Sheet 38 of 46

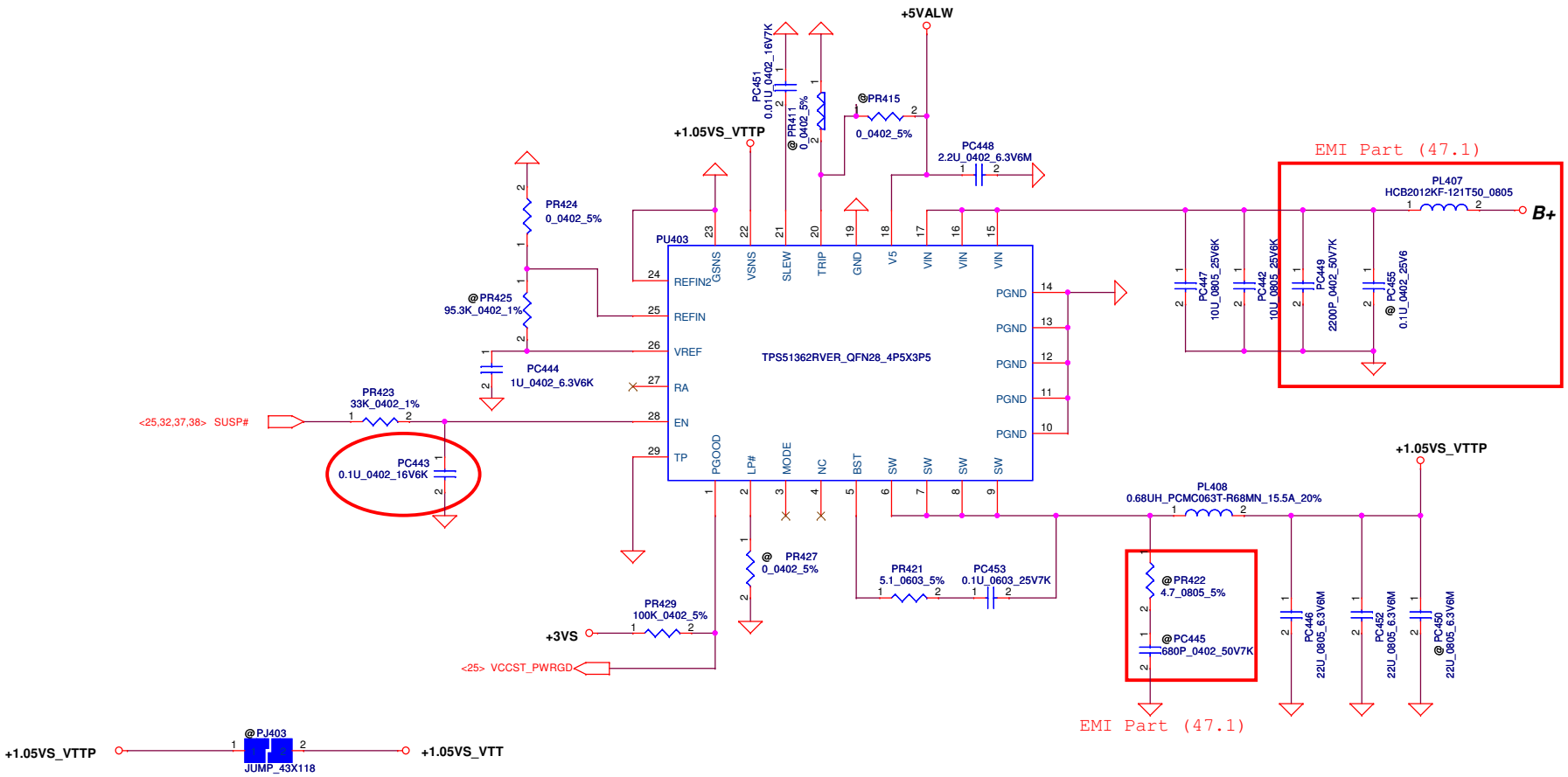


| Security Classification | Compal Secret Data | | |
|---|---|---|---|
| Issued Date | 2010/01/25 | Deciphered Date | 2012/07/11 |

THIS SHEET OF ENGINEERING DRAWING IS THE PROPRIETARY PROPERTY OF COMPAL ELECTRONICS, INC. AND CONTAINS CONFIDENTIAL AND TRADE SECRET INFORMATION. THIS SHEET MAY NOT BE TRANSFERED FROM THE CUSTODY OF THE COMPETENT DIVISION OF R&D DEPARTMENT EXCEPT AS AUTHORIZED BY COMPAL ELECTRONICS, INC. NEITHER THIS SHEET NOR THE INFORMATION IT CONTAINS MAY BE USED BY OR DISCLOSED TO ANY THIRD PARTY WITHOUT PRIOR WRITTEN CONSENT OF COMPAL ELECTRONICS, INC.

Compal Electronics, Inc.

Title: PWR +1.05VS_VCCPP/

Size: Custom | Document Number: LA-A321PR01 | Rev: 0.2

Date: Friday, March 15, 2013 | Sheet 39 of 46

EMI

1.8V controller (35.15), Support component (35.16)

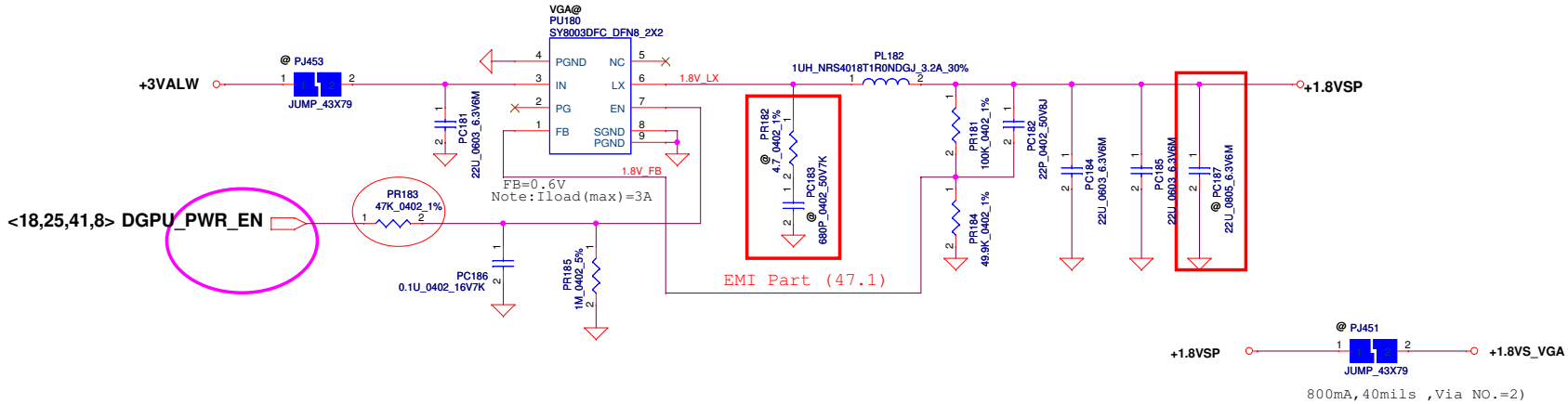


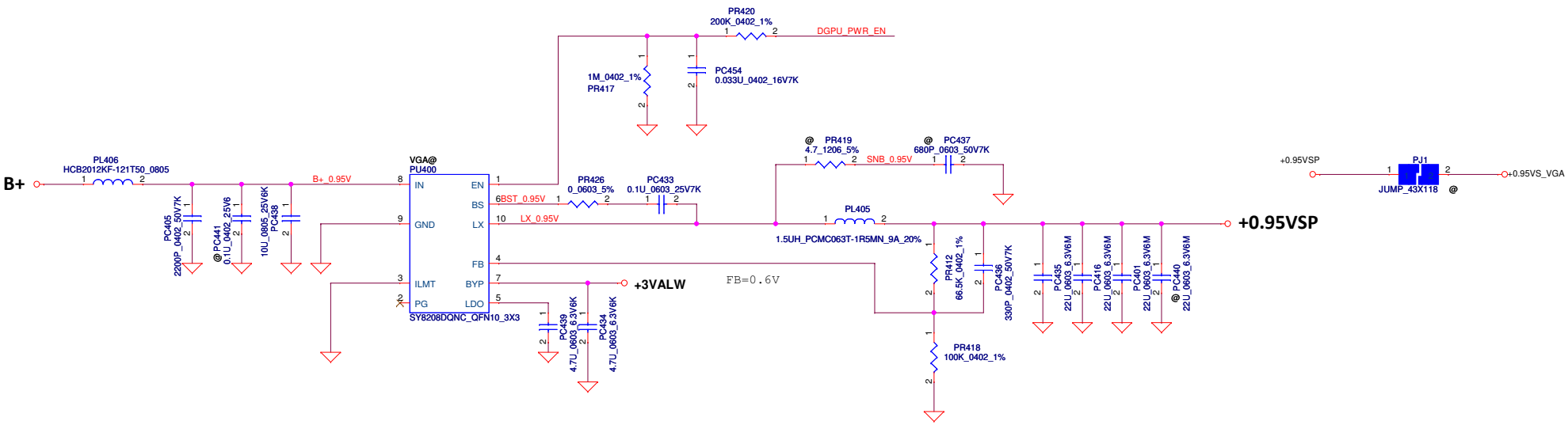


| Security Classification | Compal Secret Data | | | Compal Electronics, Inc. |
|---|---|---|---|---|
| Issued Date | 2012/09/27 | Deciphered Date | 2015/09/27 | Title: +1.8VSP/+0.95VSP |
| | | | | Size: Custom; Document Number: LA-A321PR01; Rev: 0.2 |
| | | | | Date: Thursday, March 14, 2013; Sheet 40 of 46 |

THIS SHEET OF ENGINEERING DRAWING IS THE PROPRIETARY PROPERTY OF COMPAL ELECTRONICS, INC. AND CONTAINS CONFIDENTIAL AND TRADE SECRET INFORMATION. THIS SHEET MAY NOT BE TRANSFERED FROM THE CUSTODY OF THE COMPETENT DIVISION OF R&D DEPARTMENT EXCEPT AS AUTHORIZED BY COMPAL ELECTRONICS, INC. NEITHER THIS SHEET NOR THE INFORMATION IT CONTAINS MAY BE USED BY OR DISCLOSED TO ANY THIRD PARTY WITHOUT PRIOR WRITTEN CONSENT OF COMPAL ELECTRONICS, INC.

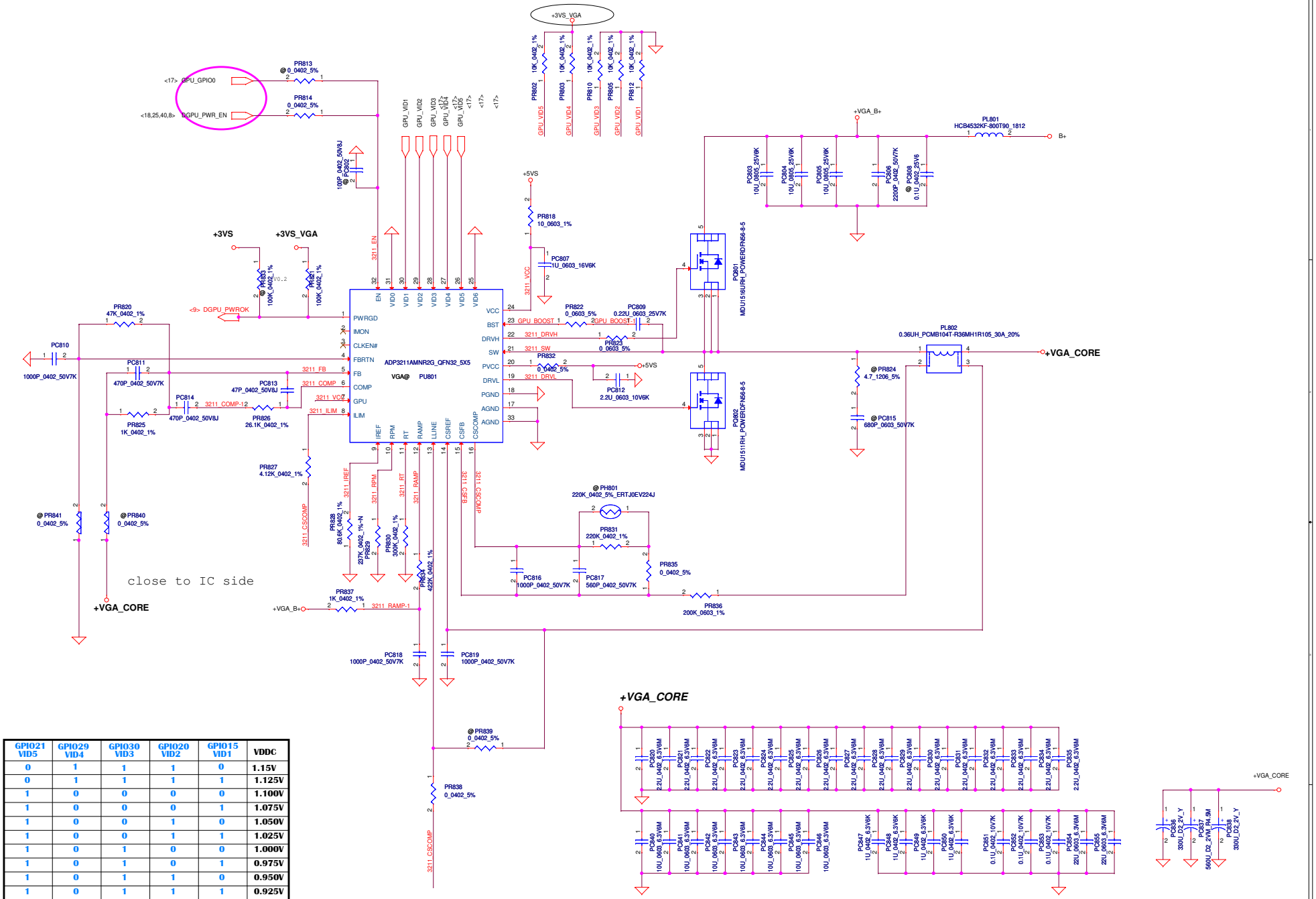


| GPIO21 VID5 | GPIO29 VID4 | GPIO30 VID3 | GPIO20 VID2 | GPIO15 VID1 | VDDC |
|---|---|---|---|---|---|
| 0 | 1 | 1 | 1 | 0 | 1.15V |
| 0 | 1 | 1 | 1 | 1 | 1.125V |
| 1 | 0 | 0 | 0 | 0 | 1.100V |
| 1 | 0 | 0 | 0 | 1 | 1.075V |
| 1 | 0 | 0 | 1 | 0 | 1.050V |
| 1 | 0 | 0 | 1 | 1 | 1.025V |
| 1 | 0 | 1 | 0 | 0 | 1.000V |
| 1 | 0 | 1 | 0 | 1 | 0.975V |
| 1 | 0 | 1 | 1 | 0 | 0.950V |
| 1 | 0 | 1 | 1 | 1 | 0.925V |
| 1 | 1 | 0 | 0 | 0 | 0.900V |
| 1 | 1 | 0 | 0 | 1 | 0.875V |
| 1 | 1 | 0 | 1 | 0 | 0.850V |
| 1 | 1 | 0 | 1 | 1 | 0.825V |
| 1 | 1 | 1 | 0 | 0 | 0.800V |
| 1 | 1 | 1 | 0 | 1 | 0.775V |

Default

| Security Classification | Compal Secret Data | | |
|---|---|---|---|
| Issued Date | 2011/06/15 | Deciphered Date | 2012/07/11 |

THIS SHEET OF ENGINEERING DRAWING IS THE PROPRIETARY PROPERTY OF COMPAL ELECTRONICS, INC. AND CONTAINS CONFIDENTIAL AND TRADE SECRET INFORMATION. THIS SHEET MAY NOT BE TRANSFERRED FROM THE CUSTODY OF THE COMPETENT DIVISION OF R&D DEPARTMENT EXCEPT AS AUTHORIZED BY COMPAL ELECTRONICS, INC. NEITHER THIS SHEET NOR THE INFORMATION IT CONTAINS MAY BE USED BY OR DISCLOSED TO ANY THIRD PARTY WITHOUT PRIOR WRITTEN CONSENT OF COMPAL ELECTRONICS, INC.

Compal Electronics, Inc.

Title: PWR-VGA_CORE

Size: C | Document Number: LA-A321PR01 | Rev: 0.2

Date: Thursday, March 14, 2013 | Sheet 41 of 46

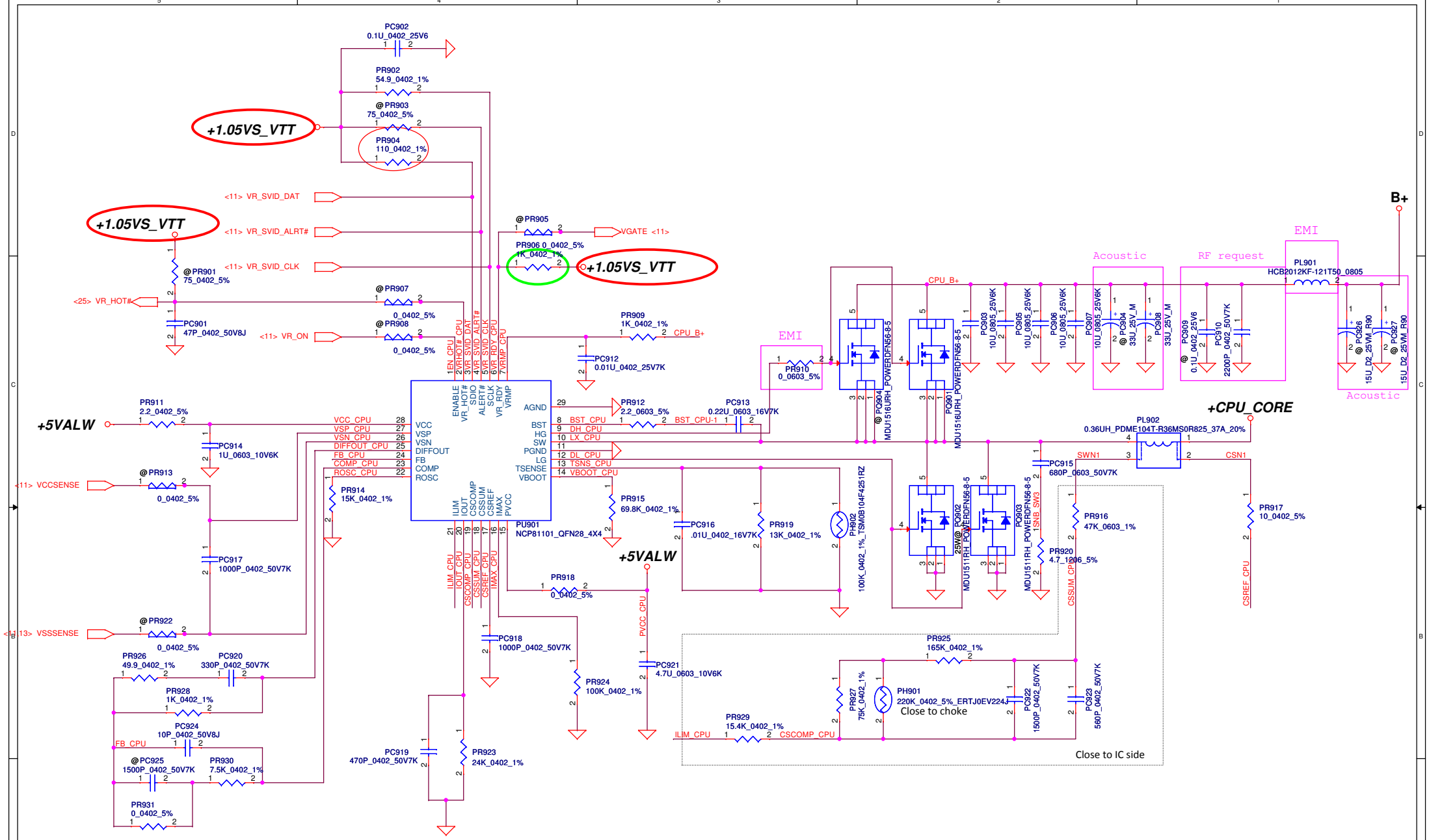


| Security Classification | Compal Secret Data | | |
|---|---|---|---|
| Issued Date | 2012/04/03 | Deciphered Date | 2014/12/31 |

THIS SHEET OF ENGINEERING DRAWING IS THE PROPRIETARY PROPERTY OF COMPAL ELECTRONICS, INC. AND CONTAINS CONFIDENTIAL AND TRADE SECRET INFORMATION. THIS SHEET MAY NOT BE TRANSFERED FROM THE CUSTODY OF THE COMPETENT DIVISION OF R&D DEPARTMENT EXCEPT AS AUTHORIZED BY COMPAL ELECTRONICS, INC. NEITHER THIS SHEET NOR THE INFORMATION IT CONTAINS MAY BE USED BY OR DISCLOSED TO ANY THIRD PARTY WITHOUT PRIOR WRITTEN CONSENT OF COMPAL ELECTRONICS, INC.

**Compal Electronics, Inc.**

Title: **PWR-CPU_CORE**

Size: | Document Number: **LA-A321PR02** | Rev: 0.2

Date: Thursday, March 14, 2013 | Sheet 42 of 46

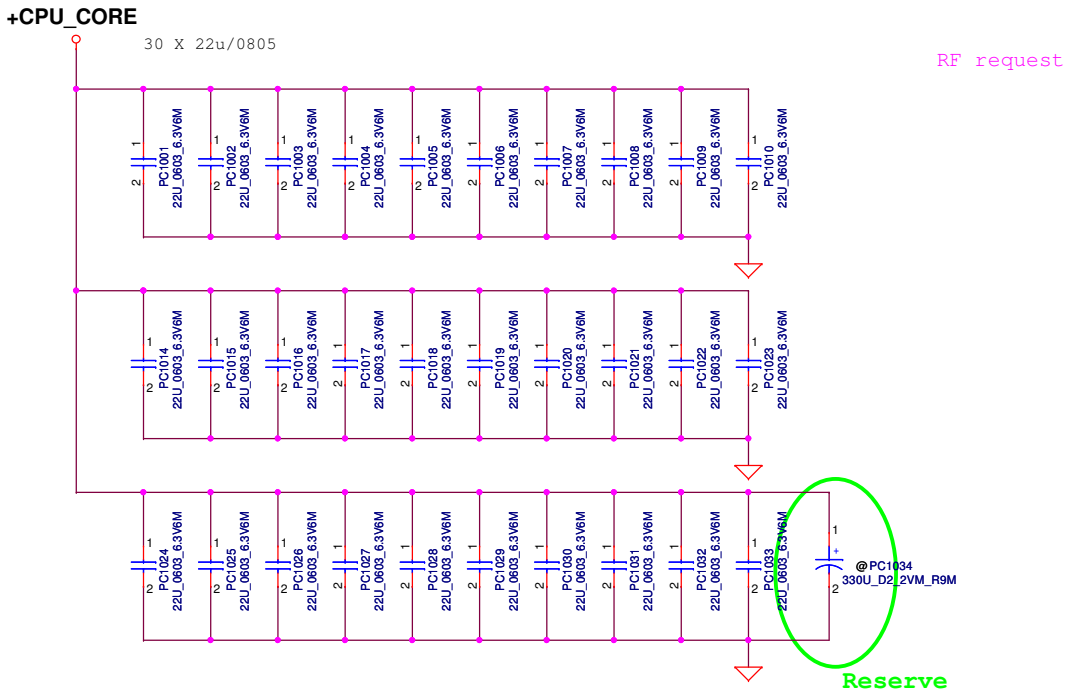


| Security Classification | Compal Secret Data | | |
|---|---|---|---|
| Issued Date | 2012/04/03 | Deciphered Date | 2014/12/31 |

THIS SHEET OF ENGINEERING DRAWING IS THE PROPRIETARY PROPERTY OF COMPAL ELECTRONICS, INC. AND CONTAINS CONFIDENTIAL AND TRADE SECRET INFORMATION. THIS SHEET MAY NOT BE TRANSFERED FROM THE CUSTODY OF THE COMPETENT DIVISION OF R&D DEPARTMENT EXCEPT AS AUTHORIZED BY COMPAL ELECTRONICS, INC. NEITHER THIS SHEET NOR THE INFORMATION IT CONTAINS MAY BE USED BY OR DISCLOSED TO ANY THIRD PARTY WITHOUT PRIOR WRITTEN CONSENT OF COMPAL ELECTRONICS, INC.

**Compal Electronics, Inc.**

Title: **PWR-PROCESSOR DECOUPLING**

Size | Document Number: **LA-A321PR02** | Rev: 0.2

Date: Thursday, March 14, 2013 | Sheet 43 of 46

# Version change list (P.I.R. List)



for PWR

| Item | Modify List | PG# | Reason for change | Date | Phase |
|---|---|---|---|---|---|
| 1 | For HW sequence | 44 | ADD PR821 100K ohm pull high +VS_VGA | 3/11 | SDV |
| 2 | For HW sequence | 37 | Remove PC512 0.1U_0402 | 3/11 | SDV |
| 3 | For HW sequence | 39 | Change PC443 to 0.1U_0402 | 3/11 | SDV |
| 4 | For HW sequence | 40 | Change PC186 to 0.1uf | 2/7 | SDV |
| 5 | For HW sequence | 40 | Change PC454 to 0.033uf | 2/7 | SDV |
| 6 | For HW sequence | 40 | Change PR183 to 47K ohm | 2/7 | SDV |
| 7 | | | | | |
| 9 | | | | | |
| 10 | | | | | |
| 11 | | | | | |
| 12 | | | | | |
| 13 | | | | | |
| 14 | | | | | |
| 15 | | | | | |
| 16 | | | | | |
| 17 | | | | | |

THIS SHEET OF ENGINEERING DRAWING IS THE PROPRIETARY PROPERTY OF COMPAL ELECTRONICS, INC. AND CONTAINS CONFIDENTIAL AND TRADE SECRET INFORMATION. THIS SHEET MAY NOT BE TRANSFERED FROM THE CUSTODY OF THE COMPETENT DIVISION OF R&D DEPARTMENT EXCEPT AS AUTHORIZED BY COMPAL ELECTRONICS, INC. NEITHER THIS SHEET NOR THE INFORMATION IT CONTAINS MAY BE USED BY OR DISCLOSED TO ANY THIRD PARTY WITHOUT PRIOR WRITTEN CONSENT OF COMPAL ELECTRONICS, INC.

| | | | |
|---|---|---|---|
| Security Classification | Compal Secret Data | | |
| Issued Date | 2013/01/11 | Deciphered Date | 2013/12/31 |

Compal Electronics, Inc.

Title: PIR (PWR)

Size: Custom | Document Number: C38-AMD KABINI Schematic | Rev: 0.2

Date: Thursday, March 14, 2013 | Sheet 44 of 46

## *Version change list (P.I.R. List)*



| Item | Reason for change | PG# | Modify List | Date | Phase |
|---|---|---|---|---|---|
| 1 | | | | | |
| 2 | | | | | |
| 3 | | | | | |
| 4 | | | | | |
| 5 | | | | | |
| 6 | | | | | |
| 7 | | | | | |
| 9 | | | | | |
| 10 | | | | | |
| 11 | | | | | |
| 12 | | | | | |
| 13 | | | | | |
| 14 | | | | | |
| 15 | | | | | |
| 16 | | | | | |
| 17 | | | | | |

THIS SHEET OF ENGINEERING DRAWING IS THE PROPRIETARY PROPERTY OF COMPAL ELECTRONICS, INC. AND CONTAINS CONFIDENTIAL AND TRADE SECRET INFORMATION. THIS SHEET MAY NOT BE TRANSFERED FROM THE CUSTODY OF THE COMPETENT DIVISION OF R&D DEPARTMENT EXCEPT AS AUTHORIZED BY COMPAL ELECTRONICS, INC. NEITHER THIS SHEET NOR THE INFORMATION IT CONTAINS MAY BE USED BY OR DISCLOSED TO ANY THIRD PARTY WITHOUT PRIOR WRITTEN CONSENT OF COMPAL ELECTRONICS, INC.

| | | | |
|---|---|---|---|
| Security Classification | Compal Secret Data | | |
| Issued Date | 2011/07/12 | Deciphered Date | 2012/07/01 |

Compal Electronics, Inc.

Title: PIR (EE)

Size: Custom | Document Number: LA-A321P | Rev: 0.2

Date: Thursday, March 14, 2013 | Sheet 45 of 46

## [AC Mode]

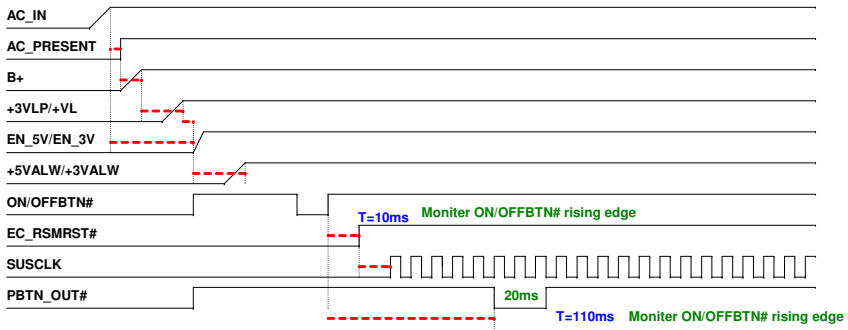


## [DC Mode]

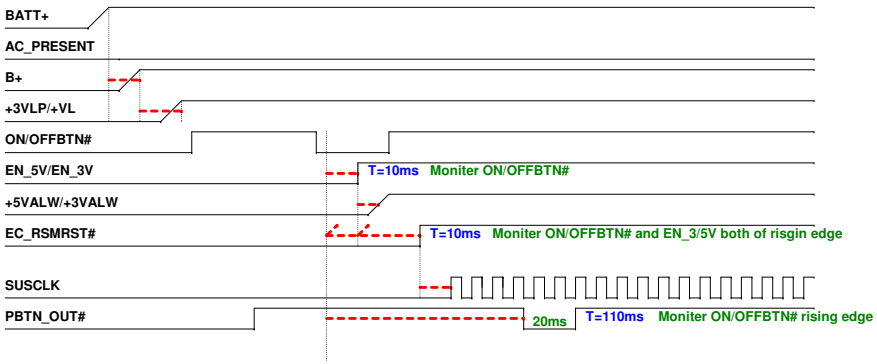


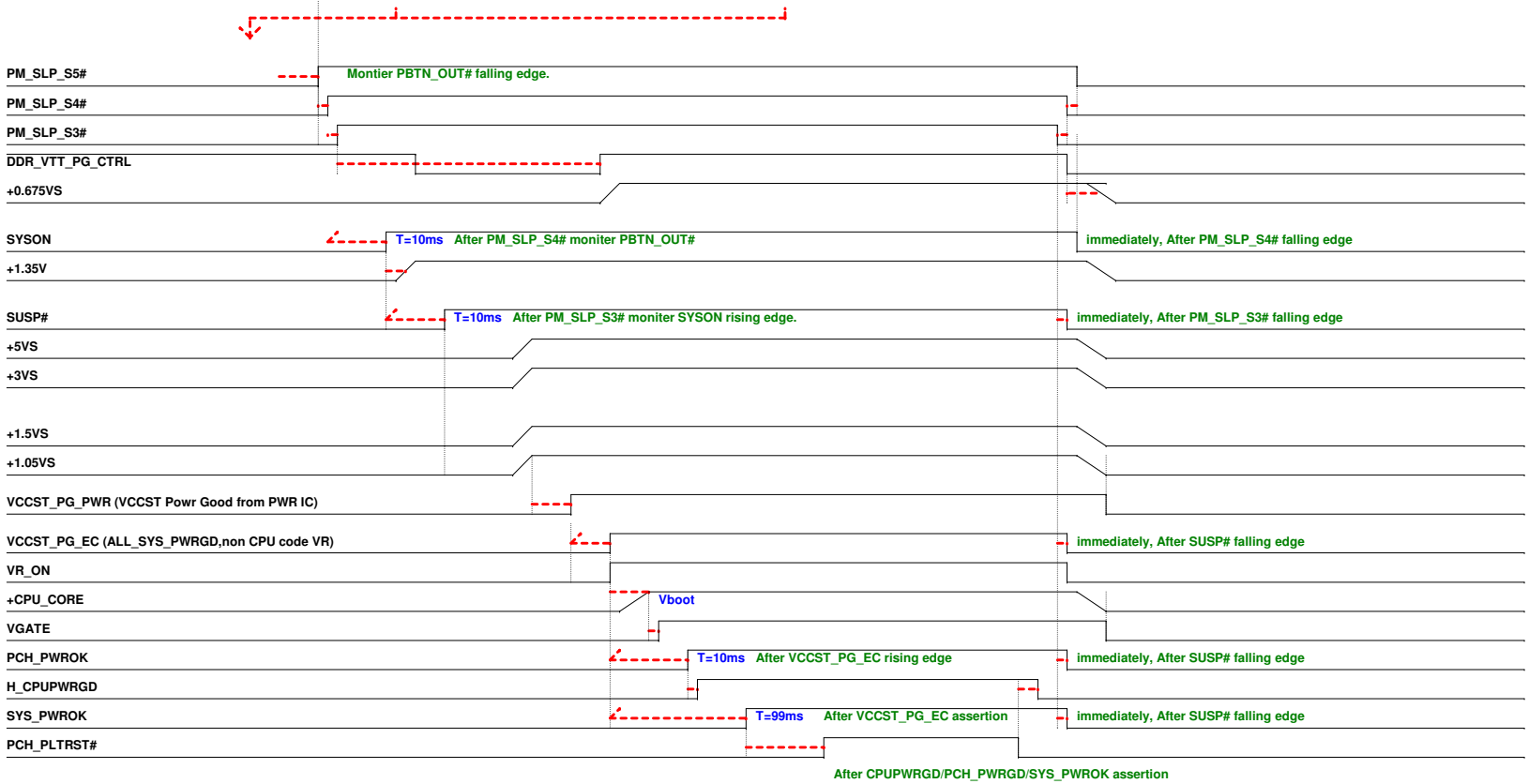


| Security Classification | Compal Secret Data | | |
|---|---|---|---|
| Issued Date | 2011/08/25 | Deciphered Date | 2012/07/25 |

THIS SHEET OF ENGINEERING DRAWING IS THE PROPRIETARY PROPERTY OF COMPAL ELECTRONICS, INC. AND CONTAINS CONFIDENTIAL AND TRADE SECRET INFORMATION. THIS SHEET MAY NOT BE TRANSFERED FROM THE CUSTODY OF THE COMPETENT DIVISION OF R&D DEPARTMENT EXCEPT AS AUTHORIZED BY COMPAL ELECTRONICS, INC. NEITHER THIS SHEET NOR THE INFORMATION IT CONTAINS MAY BE USED BY OR DISCLOSED TO ANY THIRD PARTY WITHOUT PRIOR WRITTEN CONSENT OF COMPAL ELECTRONICS, INC.

**Compal Electronics, Inc.**

Title: **Power Sequence**

Size | Document Number | Rev 0.2

Date: Thursday, March 14, 2013 | Sheet 46 of 46