MODEL NAME : VBW01
PROJECT CODE : ANRVBW0100
PCB NO : DA8000WL000 LA-9982P M/B
DA40001FO00 LS-9101P POWER BUTTON/B
DA40001FP00 LS-9102P USB/B
DA40001FQ00 LS-9103P TP BUTTON/B

Dell / Compal Confidential

Schematic Document

Intel Shark Bay ULT
OAK Mainstream2
UMA/DIS AMD Venus Pro

www.vinafix.com

2013-05-29 Rev: 3.0

X76@ : 76 level
46@ : 46 level
@ : Nopop component
CONN@ : Connector component
XDP@ : XDP function
UMA@ : Only for UMA
DIS@ : Only for Discrete
VENUS@ : VENUS Pro,VENUS XT
VENUSXT@ : VENUS XT
VENUSPRO@ : VENUS Pro
@VENUS@ : VENUS nopop component
EMI@ : EMI parts
@EMI@ : Reserve EMI parts
ESD@ : ESD parts
RF@ : RF parts

BOM config
UMA : UMA@,EMI@,ESD@,RF@
DIS VENUS : VENUS@,VENUSPRO@,DIS@,EMI@,ESD@,RF

ZZZ R1@
PCB VBW01 LA9982P/LS9101P/LS9102P/LS9103P
DA20ZG00120

www.vinafix.vn

Security Classification	Compal Secret Data		
Issued Date	2013/05/29	Deciphered Date	2014/06/01

THIS SHEET OF ENGINEERING DRAWING IS THE PROPRIETARY PROPERTY OF COMPAL ELECTRONICS, INC. AND CONTAINS CONFIDENTIAL AND TRADE SECRET INFORMATION. THIS SHEET MAY NOT BE TRANSFERED FROM THE CUSTODY OF THE COMPETENT DIVISION OF R&D DEPARTMENT EXCEPT AS AUTHORIZED BY COMPAL ELECTRONICS, INC. NEITHER THIS SHEET NOR THE INFORMATION IT CONTAINS MAY BE USED BY OR DISCLOSED TO ANY THIRD PARTY WITHOUT PRIOR WRITTEN CONSENT OF COMPAL ELECTRONICS, INC.

Compal Electronics, Inc.

Title: Cover Page

Size: Custom | Document Number: LA-9982P | Rev: 3.0

Date: Wednesday, May 29, 2013 | Sheet 1 of 57

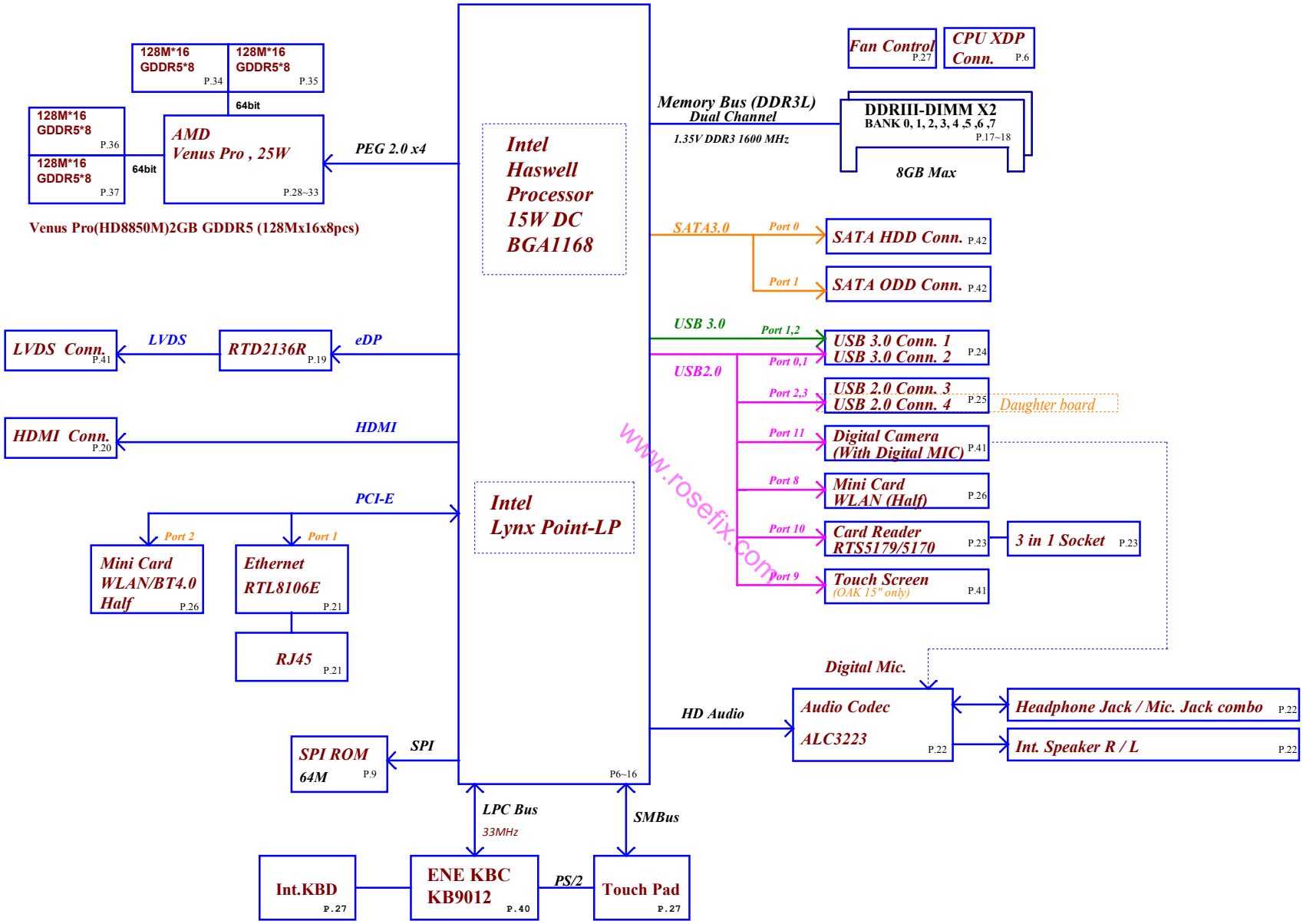

www.rosefix.com

Security Classification	Compal Secret Data			Compal Electronics, Inc.
Issued Date	2013/05/29	Deciphered Date	2014/06/01	Title: Block diagram
				Size / Document Number: LA-9982P / Rev: 3.0
				Date: Wednesday, May 29, 2013 / Sheet 2 of 57

THIS SHEET OF ENGINEERING DRAWING IS THE PROPRIETARY PROPERTY OF COMPAL ELECTRONICS, INC. AND CONTAINS CONFIDENTIAL AND TRADE SECRET INFORMATION. THIS SHEET MAY NOT BE TRANSFERRED FROM THE CUSTODY OF THE COMPETENT DIVISION OF R&D DEPARTMENT EXCEPT AS AUTHORIZED BY COMPAL ELECTRONICS, INC., NEITHER THIS SHEET NOR THE INFORMATION IT CONTAINS MAY BE USED BY OR DISCLOSED TO ANY THIRD PARTY WITHOUT PRIOR WRITTEN CONSENT OF COMPAL ELECTRONICS, INC.

www.rosefix.com

Compal Confidential
Project Code : VAW00 / VAW01
File Name : LA-9981P / LA-9982P

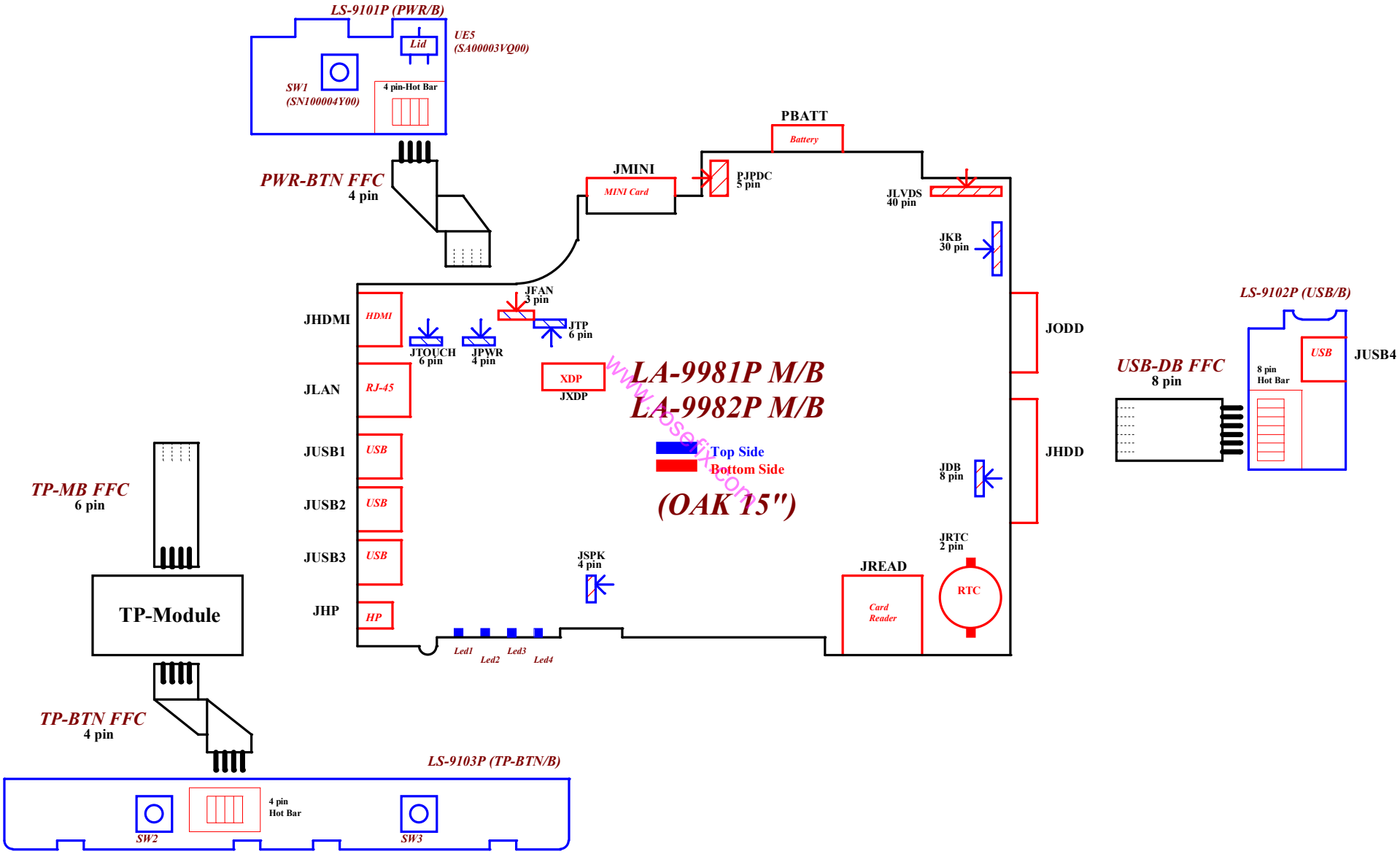

www.vnafix.com

Security Classification	Compal Secret Data		
Issued Date	2013/05/29	Deciphered Date	2014/06/01

THIS SHEET OF ENGINEERING DRAWING IS THE PROPRIETARY PROPERTY OF COMPAL ELECTRONICS, INC. AND CONTAINS CONFIDENTIAL AND TRADE SECRET INFORMATION. THIS SHEET MAY NOT BE TRANSFERRED FROM THE CUSTODY OF THE COMPETENT DIVISION OF R&D DEPARTMENT EXCEPT AS AUTHORIZED BY COMPAL ELECTRONICS, INC. NEITHER THIS SHEET NOR THE INFORMATION IT CONTAINS MAY BE USED BY OR DISCLOSED TO ANY THIRD PARTY WITHOUT PRIOR WRITTEN CONSENT OF COMPAL ELECTRONICS, INC.

Compal Electronics, Inc.

Title: DB block diagram

Size: LA-9982P | Document Number | Rev 3.0

Date: Wednesday, May 29, 2013 | Sheet 3 of 57

www.vnafix.vn

Board ID Table for AD channel

Vcc	3.3V +/- 1%
Ra	100K +/- 1%

Board ID	Rb	V_{AD_BID} min	V_{AD_BID} typ	V_{AD_BID} max	EC AD3
0	0	0.000V	0.000V	0.300V	0x00 - 0x0B
1	12K +/- 1%	0.347V	0.354V	0.360V	0x0C - 0x1C
2	15K +/- 1%	0.423V	0.430V	0.438V	0x1D - 0x26
3	20K +/- 1%	0.541V	0.550V	0.559V	0x27 - 0x30
4	27K +/- 1%	0.691V	0.702V	0.713V	0x31 - 0x3B
5	33K +/- 1%	0.807V	0.819V	0.831V	0x3C - 0x46
6	43K +/- 1%	0.978V	0.992V	1.006V	0x47 - 0x54
7	56K +/- 1%	1.169V	1.185V	1.200V	0x55 - 0x64
8	75K +/- 1%	1.398V	1.414V	1.430V	0x65 - 0x76
9	100K +/- 1%	1.634V	1.650V	1.667V	0x77 - 0x87
10	130K +/- 1%	1.849V	1.865V	1.881V	0x88 - 0x96
11	160K +/- 1%	2.015V	2.031V	2.046V	0x97 - 0xA3
12	200K +/- 1%	2.185V	2.200V	2.215V	0xA4 - 0xAD
13	240K +/- 1%	2.316V	2.329V	2.343V	0xAE - 0xB7
14	270K +/- 1%	2.395V	2.408V	2.421V	0xB8 - 0xC0
15	330K +/- 1%	2.521V	2.533V	2.544V	0xC1 - 0xC9
16	430K +/- 1%	2.667V	2.677V	2.687V	0xCA - 0xD3
17	560K +/- 1%	2.791V	2.800V	2.808V	0xD4 - 0xDC
18	750K +/- 1%	2.905V	2.912V	2.919V	0xDD - 0xE6
19	NC	3.000V	3.300V	3.300V	0xE7 - 0xFF

SMBUS Control Table

	SOURCE	BATT	Charger	RTD2136S	VGA	DDR3L	XDP	WLAN mini card	Touch pad
EC_SMB_CK1 EC_SMB_DA1	KB9012	V	V						
EC_SMB_CK2 EC_SMB_DA2	KB9012			V	V				
SMBCLK SMBDATA	ULT					V	V	V	V
SML0CLK SML0DATA	ULT								
SML1CLK SML1DATA	ULT								

Link

www.rosefix.com

Board ID TABLE

ID	PCB Revision			
	UMA	Sun XT	VenusPro	VenusXT
0	SSI&A02			
1		SSI&A02		
2			SSI&A02	
3				SSI&A02
4	PT			
5		PT		
6			PT	
7				PT
8	ST			
9		ST		
10			ST	
11				ST
12	XB			
13		XB		
14			XB	
15				XB
16	A01			
17		A01		
18			A01	
19				A01

Symbol Note :

: means Digital Ground

: means Analog Ground

CLOCK SIGNAL	
CLKOUT_PCIE0	
CLKOUT_PCIE1	
CLKOUT_PCIE2	10/100 LAN
CLKOUT_PCIE3	MINI Card (WLAN)
CLKOUT_PCIE4	dGPU
CLKOUT_PCIE5	

ULT	USB3.0	
	Port1	USB connector 2
	Port2	USB connector 1
	Port3	
	Port4	
	USB2.0	
	Port0	USB connector 2
	Port1	USB connector 1
	Port2	USB connector 3
	Port3	USB connector 4 (DB)
	Port4	MINI Card (WLAN)
	Port5	Touch Screen Panel
	Port6	Card Reader
	Port7	Camera
	PCI EXPRESS	
	Lane 1	
	Lane 2	
	Lane 3	10/100 LAN
	Lane 4	MINI Card (WLAN)
	Lane 5	PEG (N14P)
	Lane 6	PEG (N14P)
	SATA	
	SATA0	HDD
	SATA1	ODD
	SATA2	
	SATA3	

www.vnrafix.vn

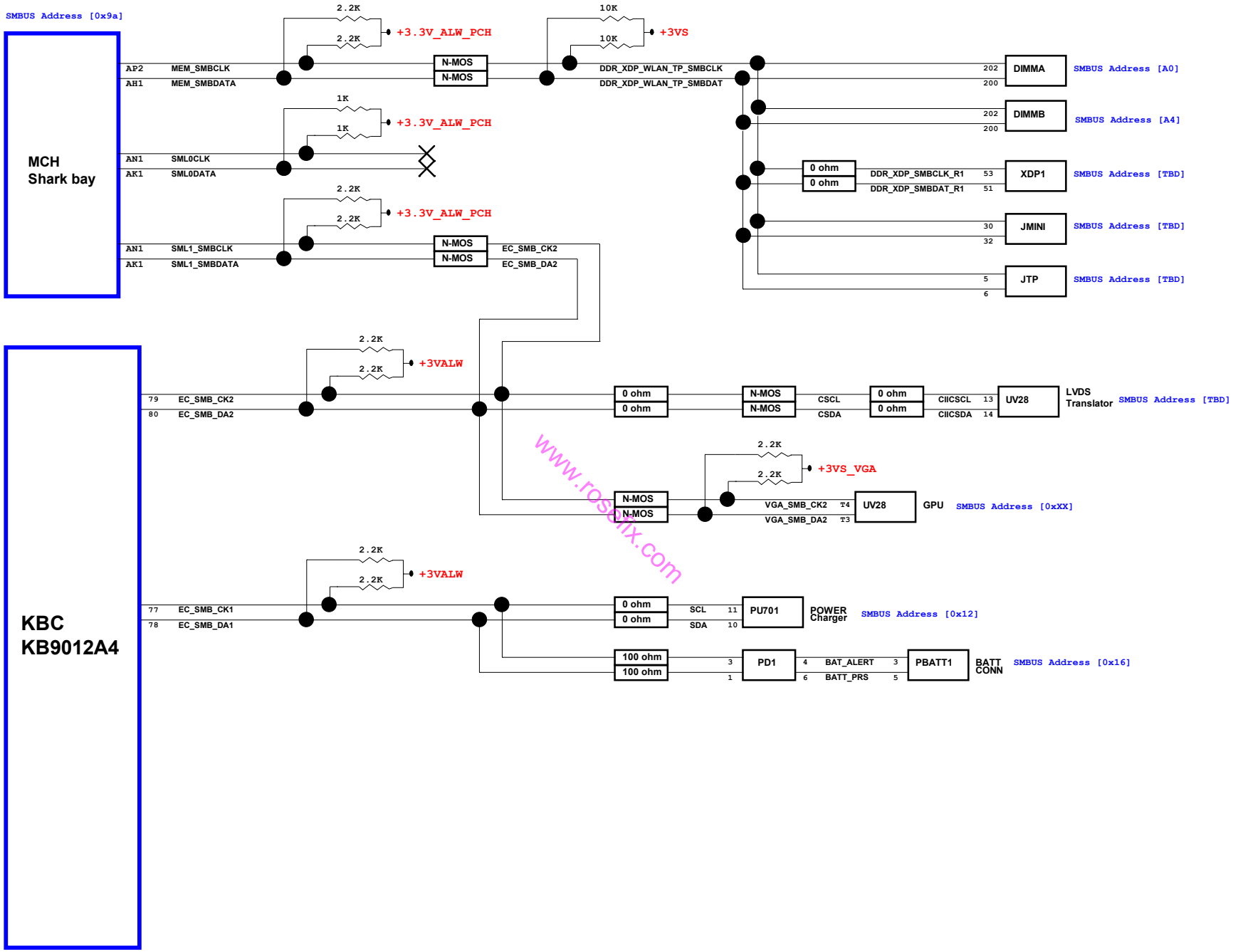

www.rosalix.com

www.vinafix.vn

Security Classification	Compal Secret Data		Compal Electronics, Inc.
Issued Date	2013/05/29	Deciphered Date	2014/06/01
Title	SMBus block diagram		
Size	Document Number LA-9982P		Rev 3.0
Date: Wednesday, May 29, 2013	Sheet 5 of 57		

THIS SHEET OF ENGINEERING DRAWING IS THE PROPRIETARY PROPERTY OF COMPAL ELECTRONICS, INC. AND CONTAINS CONFIDENTIAL AND TRADE SECRET INFORMATION. THIS SHEET MAY NOT BE TRANSFERRED FROM THE CUSTODY OF THE COMPETENT DIVISION OF R&D DEPARTMENT EXCEPT AS AUTHORIZED BY COMPAL ELECTRONICS, INC. NEITHER THIS SHEET NOR THE INFORMATION IT CONTAINS MAY BE USED BY OR DISCLOSED TO ANY THIRD PARTY WITHOUT PRIOR WRITTEN CONSENT OF COMPAL ELECTRONICS, INC.

i3-4010U-15W-GT2-MP

UC1 4010Ui3G2R1@ — CL8064701478202 SR16Q C1 1.7G BGA — SA00006SX1L

UC1 4010Ui3G2R3@ — CL8064701478202 SR16Q C1 1.7G A31! — SA00006SX2L

i5-4200U-15W-GT2-MP

UC1 4200Ui5G2R1@ — CL8064701477702 SR170 C1 1.6G BGA — SA00006SM2L

UC1 4200Ui5G2R3@ — CL8064701477702 SR170 C1 1.6G A31! — SA00006SM3L

i7-4500U-15W-GT2-MP

UC1 4500Ui7G2R1@ — CL8064701477202 SR16Z C1 1.8G BGA — SA00006SL1L

UC1 4500Ui7G2R3@ — CL8064701477202 SR16Z C1 1.8G A31! — SA00006SL2L

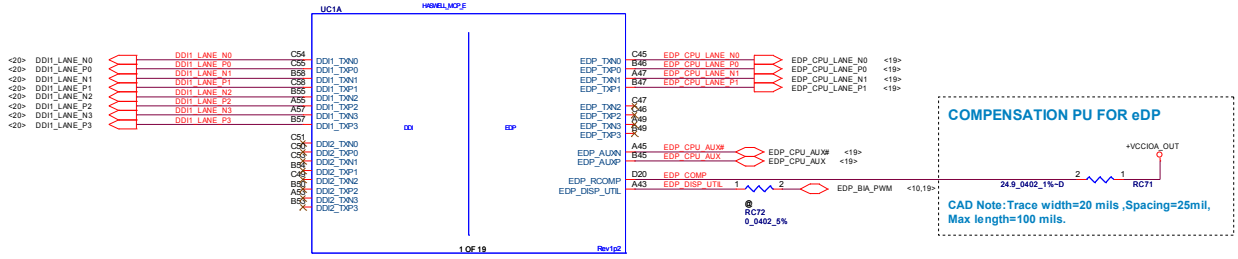

COMPENSATION PU FOR eDP

CAD Note:Trace width=20 mils ,Spacing=25mil, Max length=100 mils.

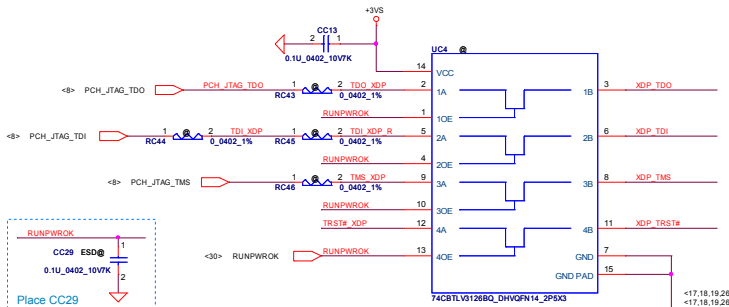

reference Shark Bay ULT Validation Customer Debug Port Implementation Requirement Rev 1.0

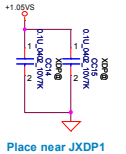

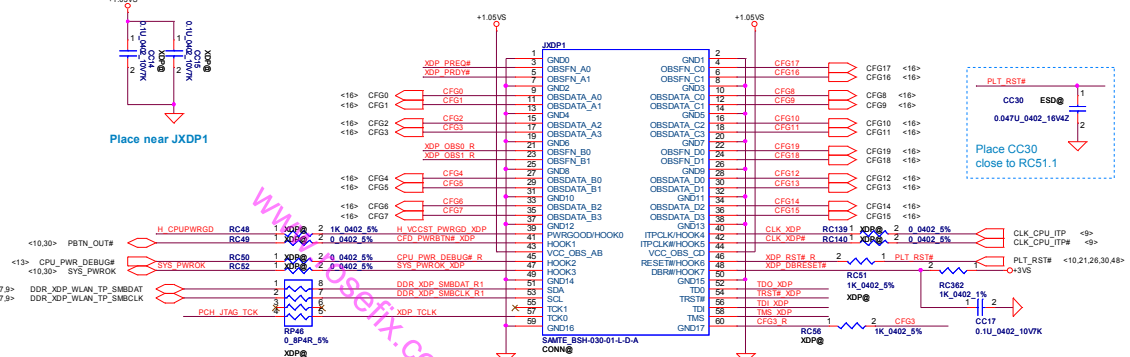

www.usefix.com

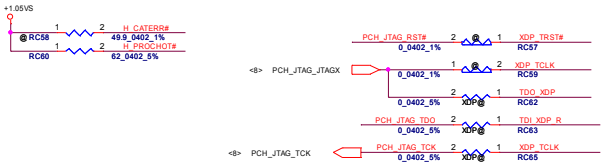

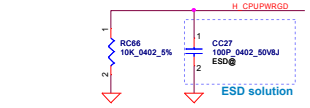

ESD solution

CAD Note:
Avoid stub in the PWRGD path while placing resistors RC115

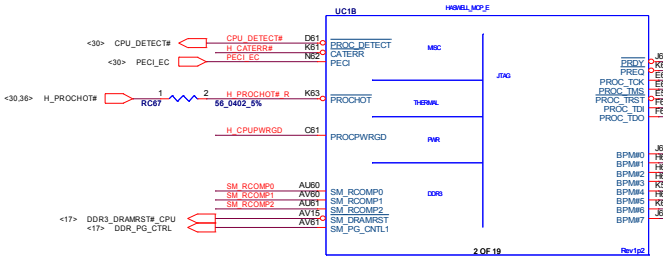

PU/PD for JTAG signals

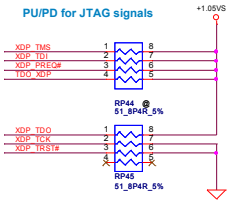

CAD Note:
Trace width=12~15 mil, Spcing=20 mils
Max trace length= 500 mil

DDR3 COMPENSATION SIGNALS

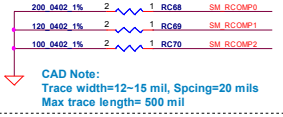

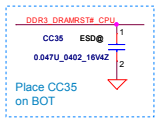

Security Classification	Compal Secret Data		Compal Electronics, Inc.
Issued Date	2013/05/29	Deciphered Date 2014/06/01	Title: MCP(1,2/19) eDP,XDP,MISC
			Size: Document Number: LA-9982P — Rev 3.0
			Date: Wednesday, May 29, 2013 — Sheet 6 of 57

www.usefix.vn

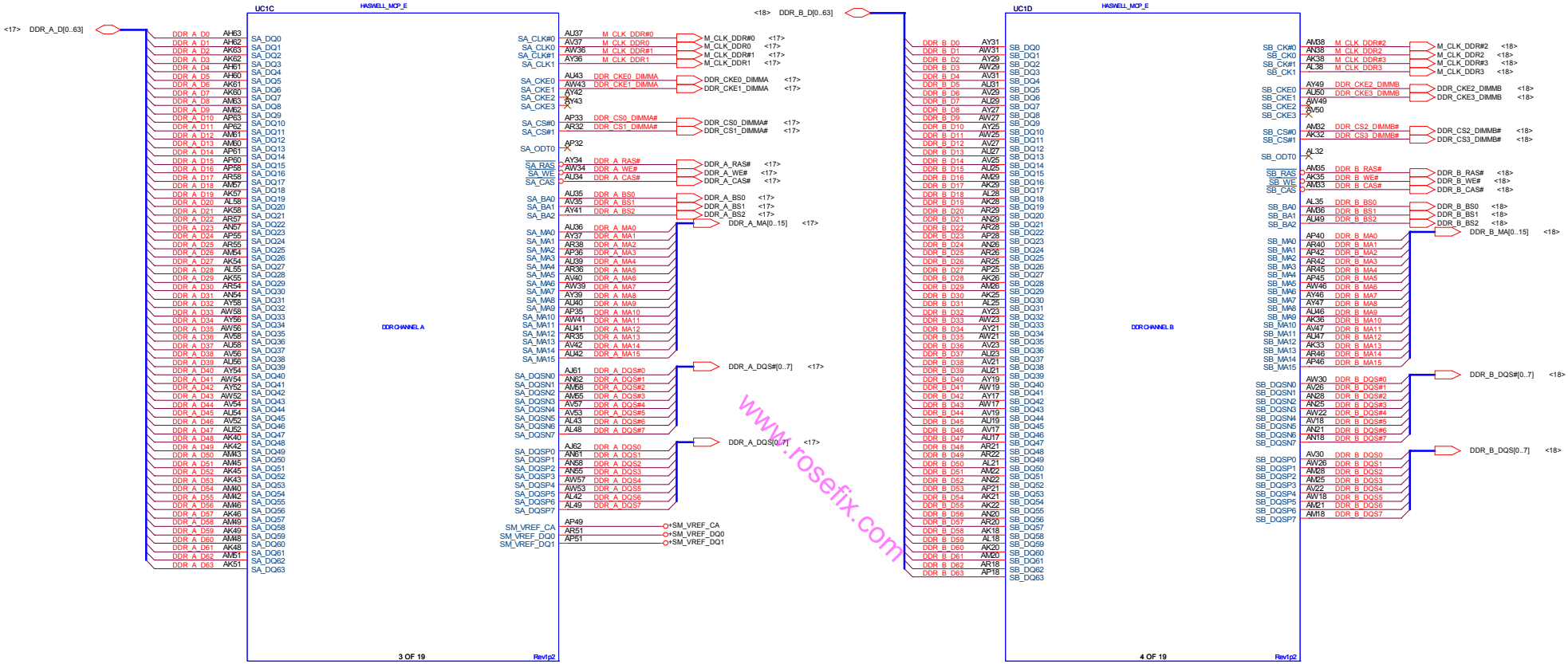

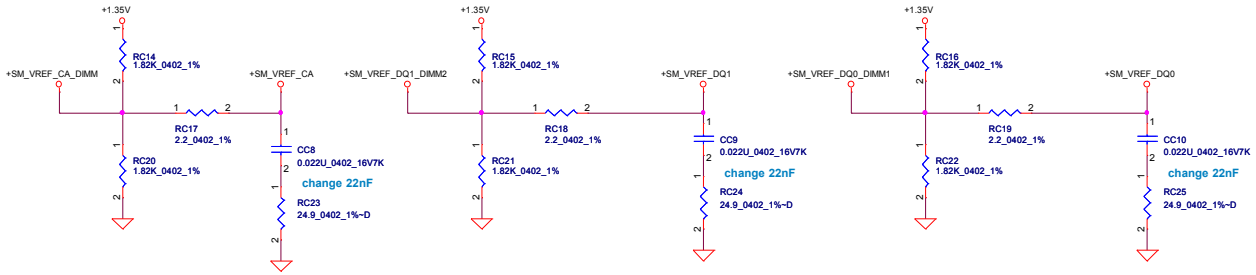

confirm by intel request PDG P141

www.rosefix.com

www.vinafix.vn

Security Classification	Compal Secret Data		
Issued Date	2013/05/29	Deciphered Date	2014/06/01

THIS SHEET OF ENGINEERING DRAWING IS THE PROPRIETARY PROPERTY OF COMPAL ELECTRONICS, INC. AND CONTAINS CONFIDENTIAL AND TRADE SECRET INFORMATION. THIS SHEET MAY NOT BE TRANSFERED FROM THE CUSTODY OF THE COMPETENT DIVISION OF R&D DEPARTMENT EXCEPT AS AUTHORIZED BY COMPAL ELECTRONICS, INC. NEITHER THIS SHEET NOR THE INFORMATION IT CONTAINS MAY BE USED BY OR DISCLOSED TO ANY THIRD PARTY WITHOUT PRIOR WRITTEN CONSENT OF COMPAL ELECTRONICS, INC.

Compal Electronics, Inc.

Title: MCP(3.4/19) DDR3

Size: | Document Number: LA-9982P | Rev: 3.0

Date: Wednesday, May 29, 2013 | Sheet 7 of 57

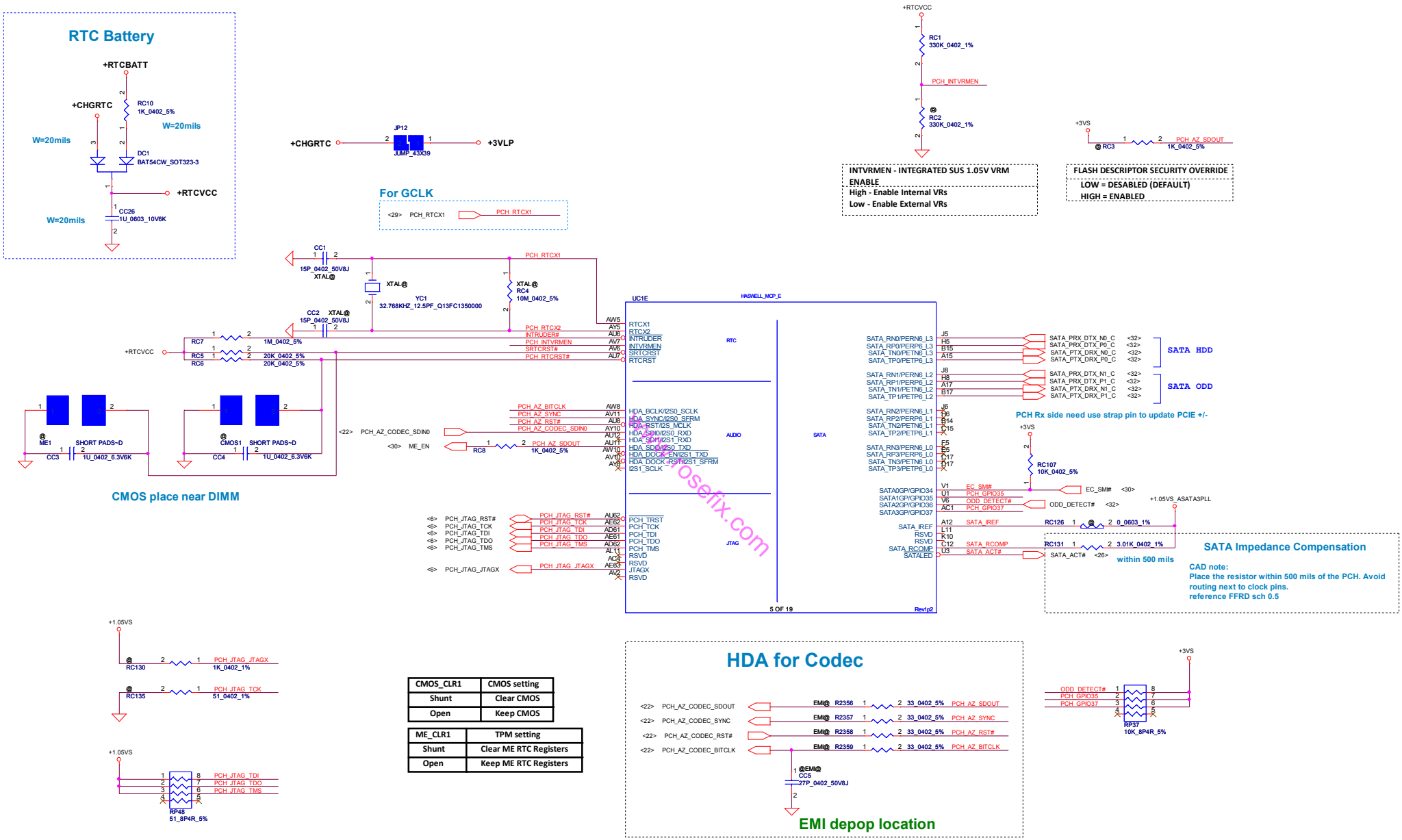

CMOS_CLR1	CMOS setting
Shunt	Clear CMOS
Open	Keep CMOS

ME_CLR1	TPM setting
Shunt	Clear ME RTC Registers
Open	Keep ME RTC Registers

www.vinafix.vn

Security Classification	Compal Secret Data		
Issued Date	2013/05/29	Deciphered Date	2014/06/01

THIS SHEET OF ENGINEERING DRAWING IS THE PROPRIETARY PROPERTY OF COMPAL ELECTRONICS, INC. AND CONTAINS CONFIDENTIAL AND TRADE SECRET INFORMATION. THIS SHEET MAY NOT BE TRANSFERED FROM THE CUSTODY OF THE COMPETENT DIVISION OF R&D DEPARTMENT EXCEPT AS AUTHORIZED BY COMPAL ELECTRONICS, INC. NEITHER THIS SHEET NOR THE INFORMATION IT CONTAINS MAY BE USED BY OR DISCLOSED TO ANY THIRD PARTY WITHOUT PRIOR WRITTEN CONSENT OF COMPAL ELECTRONICS, INC.

Compal Electronics, Inc.

Title: MCP(5/19) RTC,SATA,HDA,JTAG

Size | Document Number: LA-9982P | Rev: 3.0

Date: Wednesday, May 29, 2013 | Sheet 8 of 57

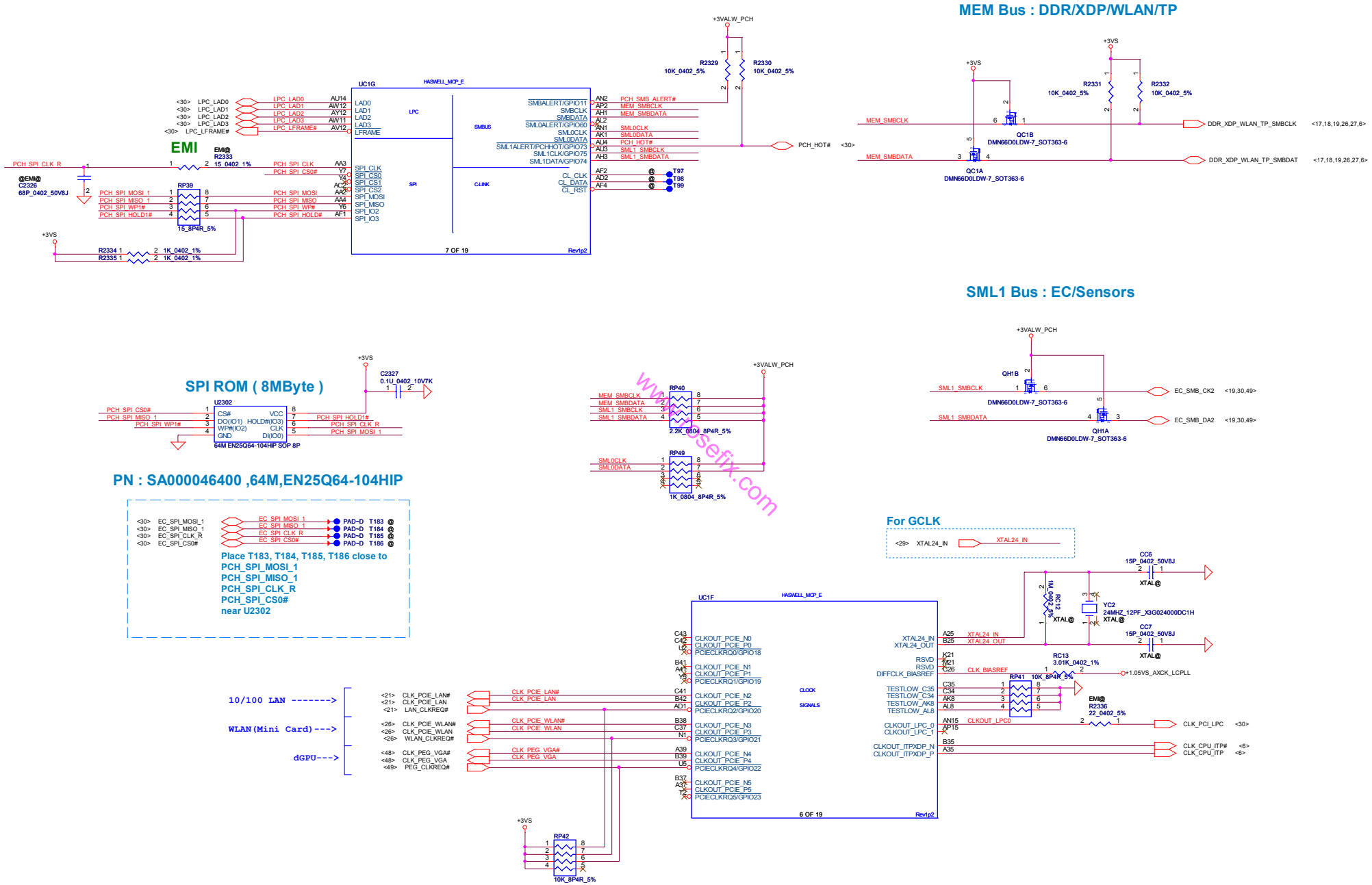

Security Classification	Compal Secret Data		
Issued Date	2013/05/29	Deciphered Date	2014/06/01

THIS SHEET OF ENGINEERING DRAWING IS THE PROPRIETARY PROPERTY OF COMPAL ELECTRONICS, INC. AND CONTAINS CONFIDENTIAL AND TRADE SECRET INFORMATION. THIS SHEET MAY NOT BE TRANSFERED FROM THE CUSTODY OF THE COMPETENT DIVISION OF R&D DEPARTMENT EXCEPT AS AUTHORIZED BY COMPAL ELECTRONICS, INC. NEITHER THIS SHEET NOR THE INFORMATION IT CONTAINS MAY BE USED BY OR DISCLOSED TO ANY THIRD PARTY WITHOUT PRIOR WRITTEN CONSENT OF COMPAL ELECTRONICS, INC.

Compal Electronics, Inc.

Title: MCP(6,7/19) CLK,SMB,SPI,LPC

Size: | Document Number: LA-9982P | Rev: 3.0

Date: Wednesday, May 29, 2013 | Sheet 9 of 57

www.vinafix.vn

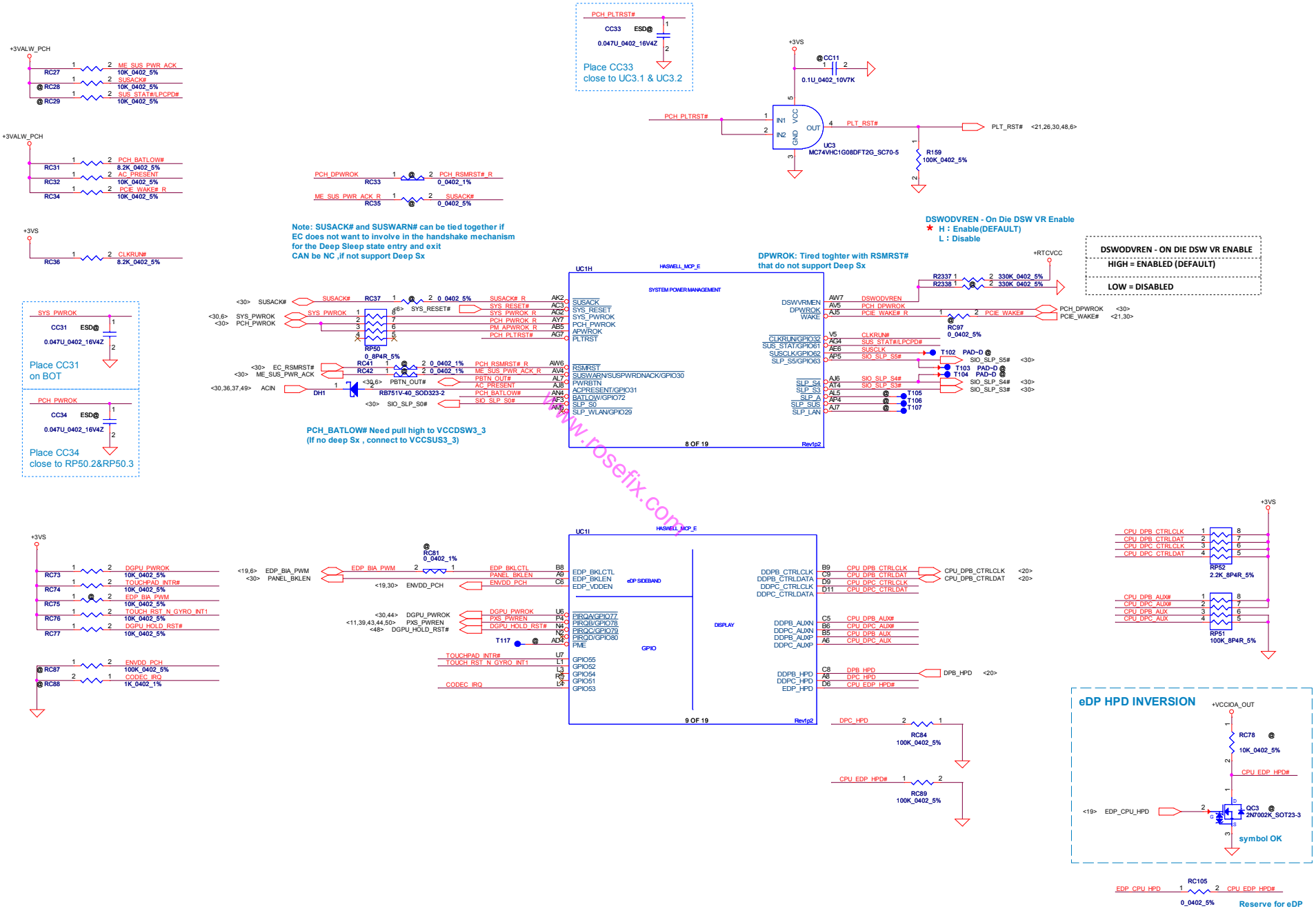

www.rosefix.com

www.vinafix.vn

Security Classification	Compal Secret Data		Compal Electronics, Inc.
Issued Date	2013/05/29	Deciphered Date 2014/06/01	Title: MCP(8,9/19) DDI,EDP,GPIO
			Size: Document Number: LA-9982P — Rev: 3.0
			Date: Wednesday, May 29, 2013 — Sheet 10 of 57

THIS SHEET OF ENGINEERING DRAWING IS THE PROPRIETARY PROPERTY OF COMPAL ELECTRONICS, INC. AND CONTAINS CONFIDENTIAL AND TRADE SECRET INFORMATION. THIS SHEET MAY NOT BE TRANSFERED FROM THE CUSTODY OF THE COMPETENT DIVISION OF R&D DEPARTMENT, EXCEPT AS AUTHORIZED BY COMPAL ELECTRONICS, INC. NEITHER THIS SHEET NOR THE INFORMATION IT CONTAINS MAY BE USED BY OR DISCLOSED TO ANY THIRD PARTY WITHOUT PRIOR WRITTEN CONSENT OF COMPAL ELECTRONICS, INC.

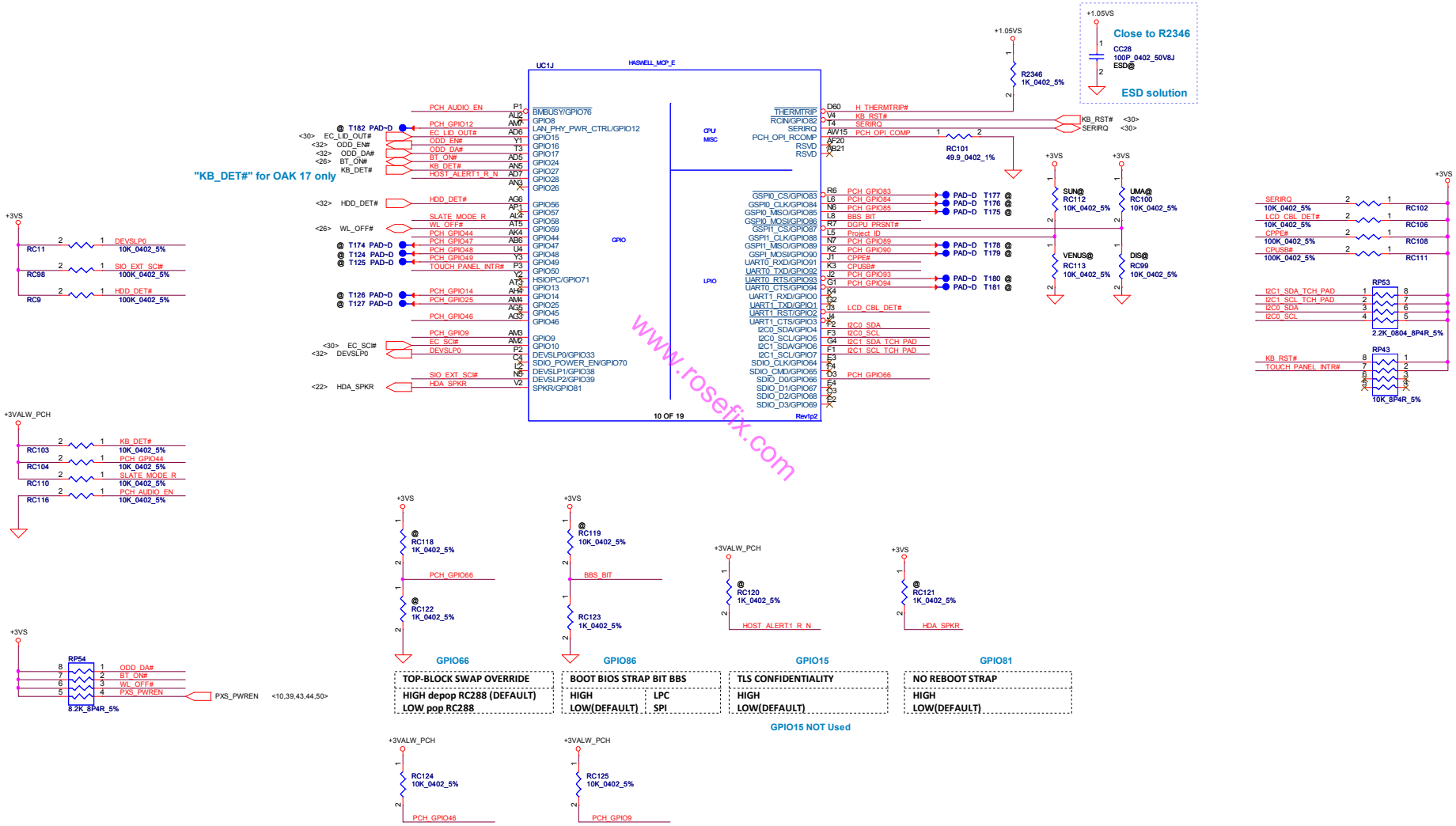

www.rosefix.com

www.vinafix.vn

Security Classification	Compal Secret Data		Compal Electronics, Inc.
Issued Date	2013/05/29	Deciphered Date 2014/06/01	Title: MCP(10/19) GPIO,LPIO,MISC
			Size: Document Number: LA-9982P Rev: 3.0
			Date: Wednesday, May 29, 2013 Sheet 11 of 57

THIS SHEET OF ENGINEERING DRAWING IS THE PROPRIETARY PROPERTY OF COMPAL ELECTRONICS, INC. AND CONTAINS CONFIDENTIAL AND TRADE SECRET INFORMATION. THIS SHEET MAY NOT BE TRANSFERED FROM THE CUSTODY OF THE COMPETENT DIVISION OF R&D DEPARTMENT EXCEPT AS AUTHORIZED BY COMPAL ELECTRONICS, INC. NEITHER THIS SHEET NOR THE INFORMATION IT CONTAINS MAY BE USED BY OR DISCLOSED TO ANY THIRD PARTY WITHOUT PRIOR WRITTEN CONSENT OF COMPAL ELECTRONICS, INC.

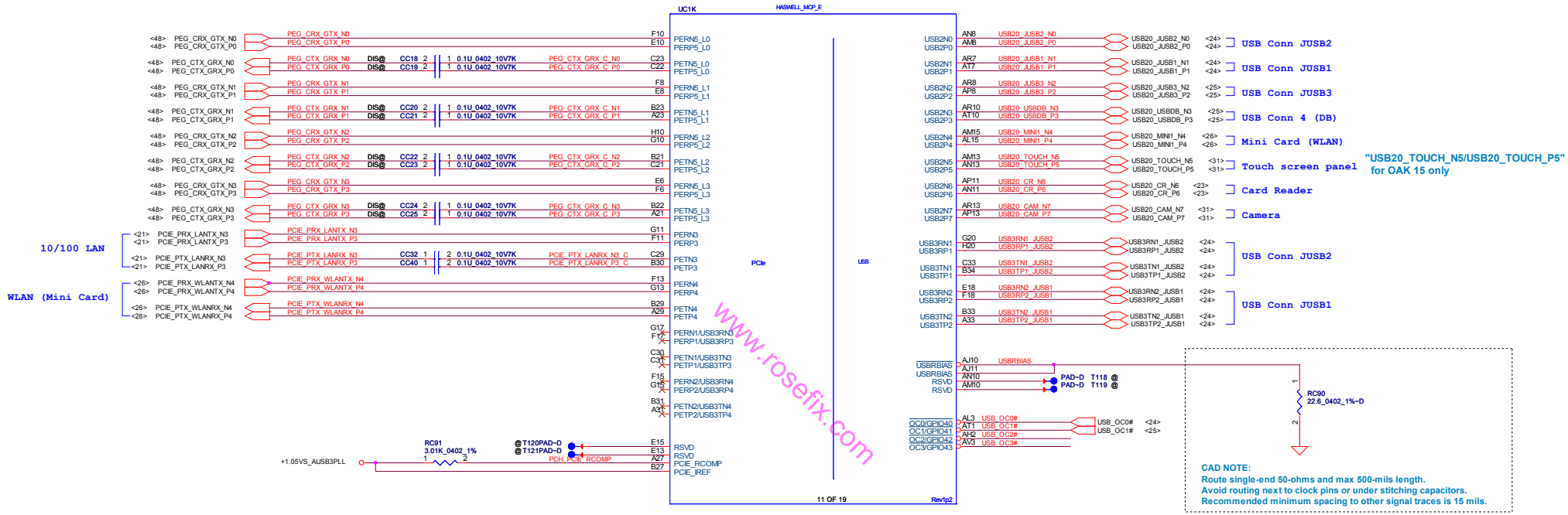

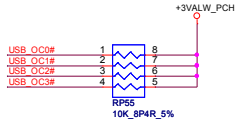

www.rosefix.com

www.vinafix.vn

Security Classification	Compal Secret Data		Compal Electronics, Inc.
Issued Date: 2013/05/29	Deciphered Date 2014/06/01		Title: MCP(11/19) PCIE,USB
			Size: Document Number: LA-9982P Rev: 3.0
			Date: Wednesday, May 29, 2013 Sheet 12 of 57

THIS SHEET OF ENGINEERING DRAWING IS THE PROPRIETARY PROPERTY OF COMPAL ELECTRONICS, INC. AND CONTAINS CONFIDENTIAL AND TRADE SECRET INFORMATION. THIS SHEET MAY NOT BE TRANSFERED FROM THE CUSTODY OF THE COMPETENT DIVISION OF R&D DEPARTMENT EXCEPT AS AUTHORIZED BY COMPAL ELECTRONICS, INC. NEITHER THIS SHEET NOR THE INFORMATION IT CONTAINS MAY BE USED BY OR DISCLOSED TO ANY THIRD PARTY WITHOUT PRIOR WRITTEN CONSENT OF COMPAL ELECTRONICS, INC.

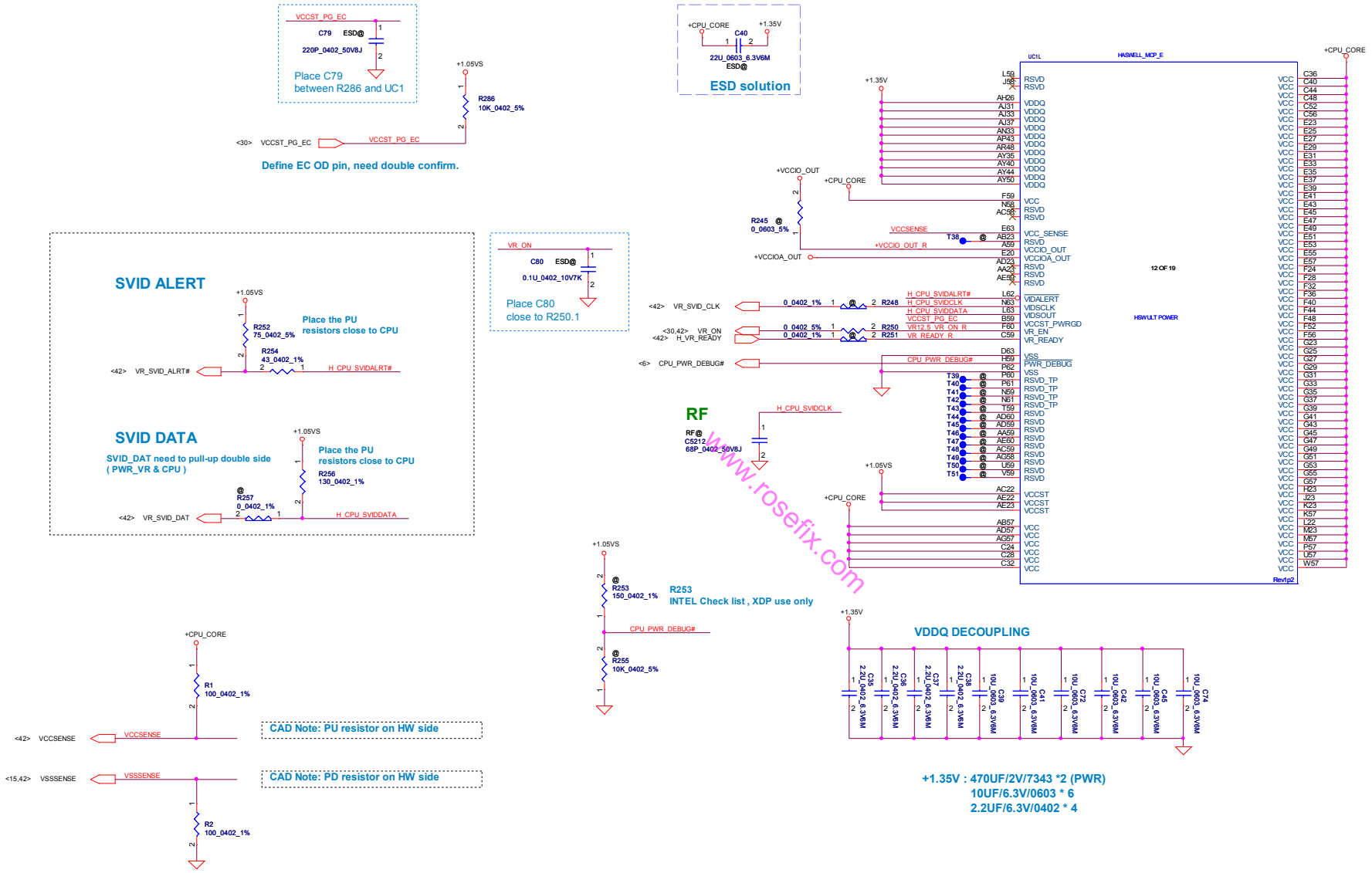

www.rosefix.com

www.vinafix.vn

Security Classification	Compal Secret Data		Compal Electronics, Inc.
Issued Date: 2013/05/29	Deciphered Date 2014/06/01		Title: MCP(12/19) Power
			Size: Document Number: LA-9982P Rev: 3.0
			Date: Wednesday, May 29, 2013 Sheet 13 of 57

THIS SHEET OF ENGINEERING DRAWING IS THE PROPRIETARY PROPERTY OF COMPAL ELECTRONICS, INC. AND CONTAINS CONFIDENTIAL AND TRADE SECRET INFORMATION. THIS SHEET MAY NOT BE TRANSFERED FROM THE CUSTODY OF THE COMPETENT DIVISION OF R&D DEPARTMENT EXCEPT AS AUTHORIZED BY COMPAL ELECTRONICS, INC. NEITHER THIS SHEET NOR THE INFORMATION IT CONTAINS MAY BE USED BY OR DISCLOSED TO ANY THIRD PARTY WITHOUT PRIOR WRITTEN CONSENT OF COMPAL ELECTRONICS, INC.

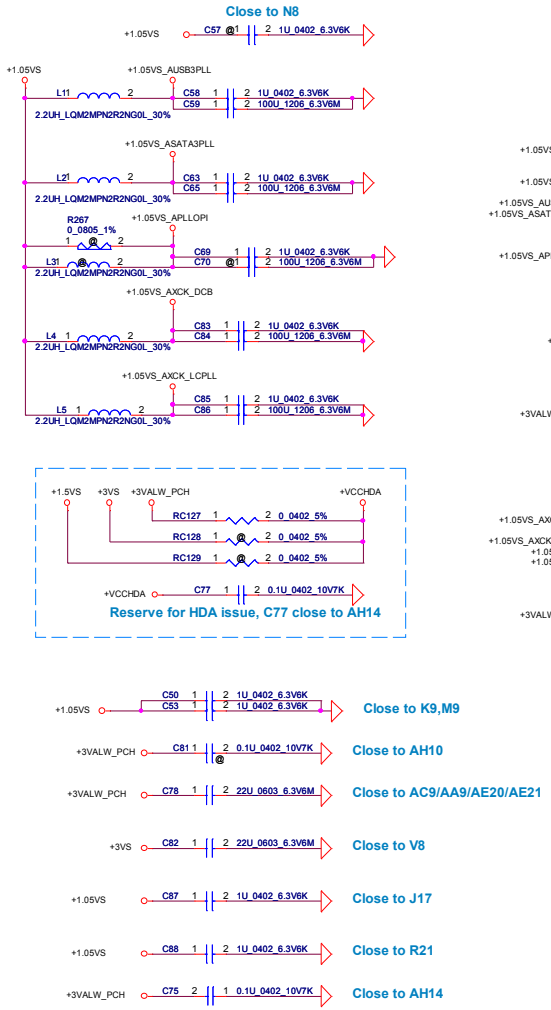

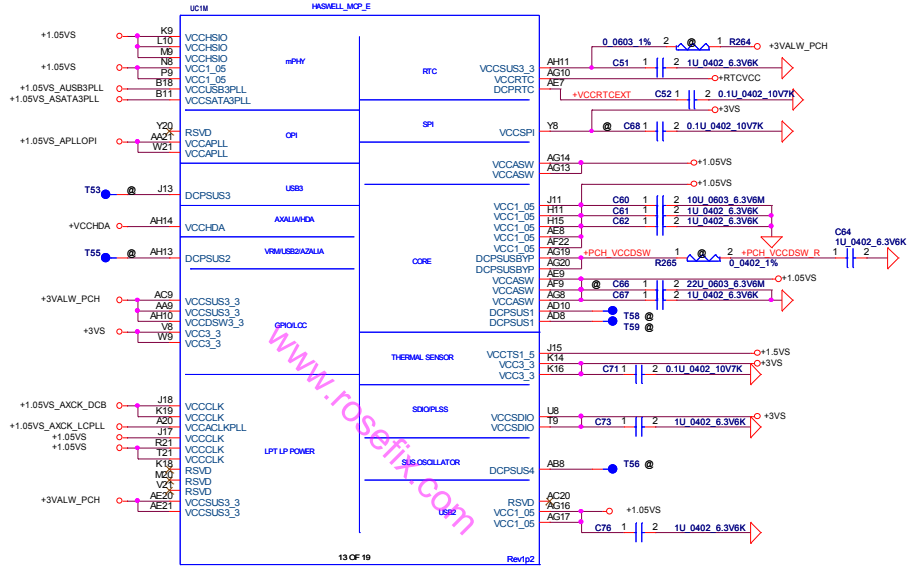

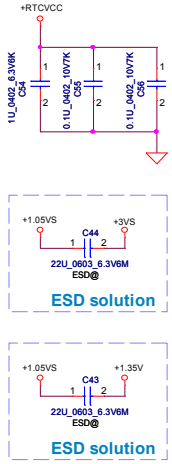

www.rosefix.com

www.vinafix.vn

Security Classification	Compal Secret Data		Compal Electronics, Inc.
Issued Date	2013/05/29	Deciphered Date	2014/06/01
Title	MCP(13/19) Power		
Size	Document Number LA-9982P		Rev 3.0
Date: Wednesday, May 29, 2013	Sheet 14 of 57		

THIS SHEET OF ENGINEERING DRAWING IS THE PROPRIETARY PROPERTY OF COMPAL ELECTRONICS, INC. AND CONTAINS CONFIDENTIAL AND TRADE SECRET INFORMATION. THIS SHEET MAY NOT BE TRANSFERED FROM THE CUSTODY OF THE COMPETENT DIVISION OF R&D DEPARTMENT EXCEPT AS AUTHORIZED BY COMPAL ELECTRONICS, INC. NEITHER THIS SHEET NOR THE INFORMATION IT CONTAINS MAY BE USED BY OR DISCLOSED TO ANY THIRD PARTY WITHOUT PRIOR WRITTEN CONSENT OF COMPAL ELECTRONICS, INC.

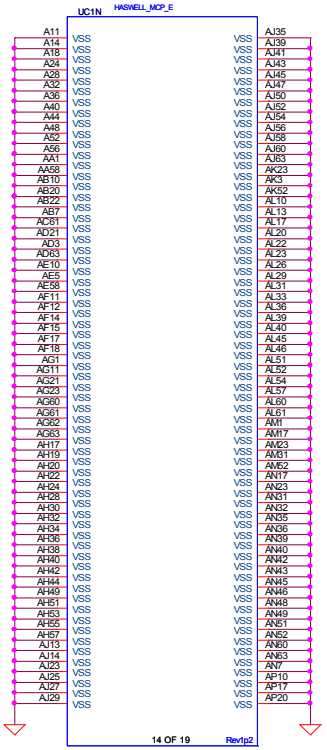

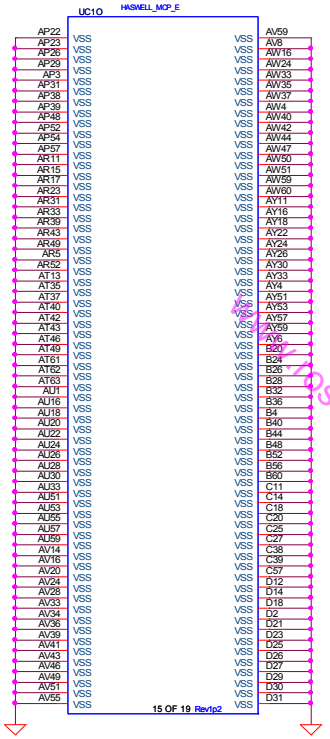

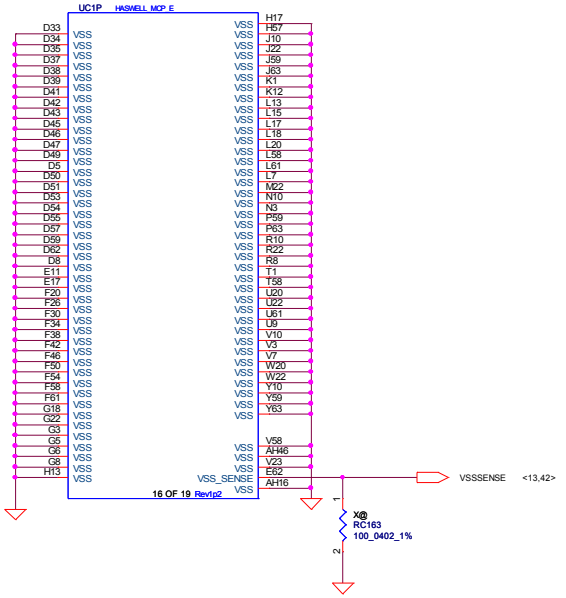

CAD Note: RC163 SHOULD BE PLACED CLOSE TO CPU

www.vinafix.com

Security Classification	Compal Secret Data		
Issued Date	2013/05/29	Deciphered Date	2014/06/01

THIS SHEET OF ENGINEERING DRAWING IS THE PROPRIETARY PROPERTY OF COMPAL ELECTRONICS, INC. AND CONTAINS CONFIDENTIAL AND TRADE SECRET INFORMATION. THIS SHEET MAY NOT BE TRANSFERED FROM THE CUSTODY OF THE COMPETENT DIVISION OF R&D DEPARTMENT EXCEPT AS AUTHORIZED BY COMPAL ELECTRONICS, INC., NEITHER THIS SHEET NOR THE INFORMATION IT CONTAINS MAY BE USED BY OR DISCLOSED TO ANY THIRD PARTY WITHOUT PRIOR WRITTEN CONSENT OF COMPAL ELECTRONICS, INC.

Compal Electronics, Inc.

Title: **MCP(14,15,16/19) VSS**

Size: | Document Number: **LA-9982P** | Rev: 3.0

Date: Wednesday, May 29, 2013 | Sheet 15 of 57

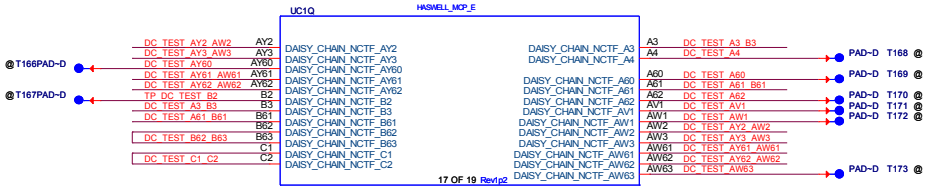

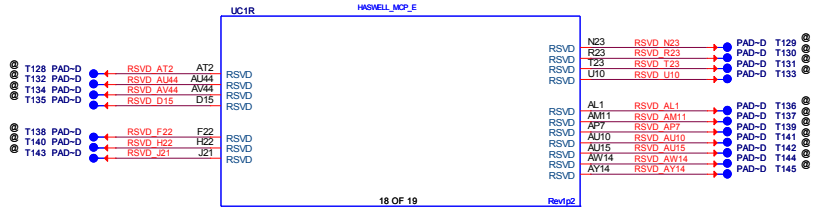

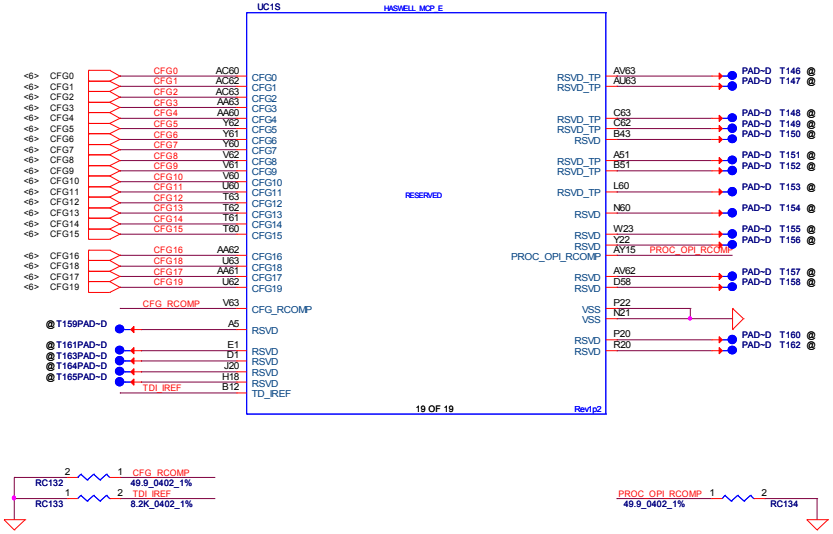

www.rosefix.com

CFG STRAPS for CPU

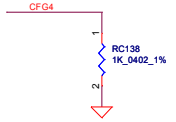

Display Port Presence Strap	
CFG4	1: Disabled; No Physical Display Port attached to Embedded Display Port 0: Enabled; An external Display Port device is connected to the Embedded Display Port

www.vinafix.vn

Security Classification	Compal Secret Data		
Issued Date	2013/05/29	Deciphered Date	2014/06/01

THIS SHEET OF ENGINEERING DRAWING IS THE PROPRIETARY PROPERTY OF COMPAL ELECTRONICS, INC. AND CONTAINS CONFIDENTIAL AND TRADE SECRET INFORMATION. THIS SHEET MAY NOT BE TRANSFERRED FROM THE CUSTODY OF THE COMPETENT DIVISION OF R&D DEPARTMENT EXCEPT AS AUTHORIZED BY COMPAL ELECTRONICS, INC. NEITHER THIS SHEET NOR THE INFORMATION IT CONTAINS MAY BE USED BY OR DISCLOSED TO ANY THIRD PARTY WITHOUT PRIOR WRITTEN CONSENT OF COMPAL ELECTRONICS, INC.

Compal Electronics, Inc.

Title: MCP(17,18,19/19) CFG,RSVD

Size | Document Number: LA-9982P | Rev: 3.0

Date: Wednesday, May 29, 2013 | Sheet 16 of 57

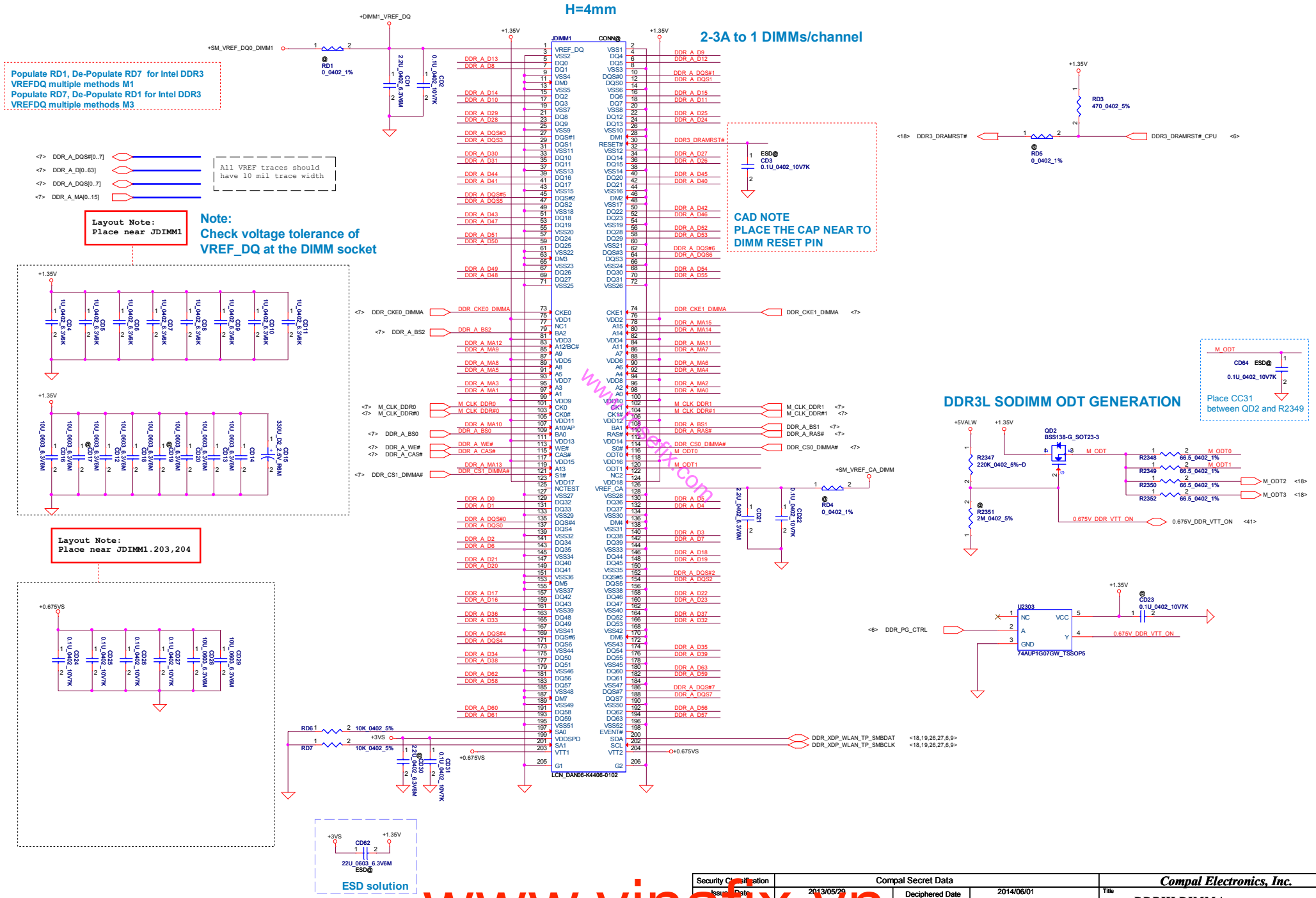

Security Classification	Compal Secret Data		
Issued Date	2013/05/29	Deciphered Date	2014/06/01

THIS SHEET OF ENGINEERING DRAWING IS THE PROPRIETARY PROPERTY OF COMPAL ELECTRONICS, INC. AND CONTAINS CONFIDENTIAL AND TRADE SECRET INFORMATION. THIS SHEET MAY NOT BE TRANSFERED FROM THE CUSTODY OF THE COMPETENT DIVISION OF R&D DEPARTMENT EXCEPT AS AUTHORIZED BY COMPAL ELECTRONICS, INC. NEITHER THIS SHEET NOR THE INFORMATION IT CONTAINS MAY BE USED BY OR DISCLOSED TO ANY THIRD PARTY WITHOUT PRIOR WRITTEN CONSENT OF COMPAL ELECTRONICS, INC.

Compal Electronics, Inc.

Title: **DDRIII DIMMA**

Size: | Document Number: **LA-9982P** | Rev: 3.0

Date: Wednesday, May 29, 2013 | Sheet 17 of 57

www.vinafix.vn

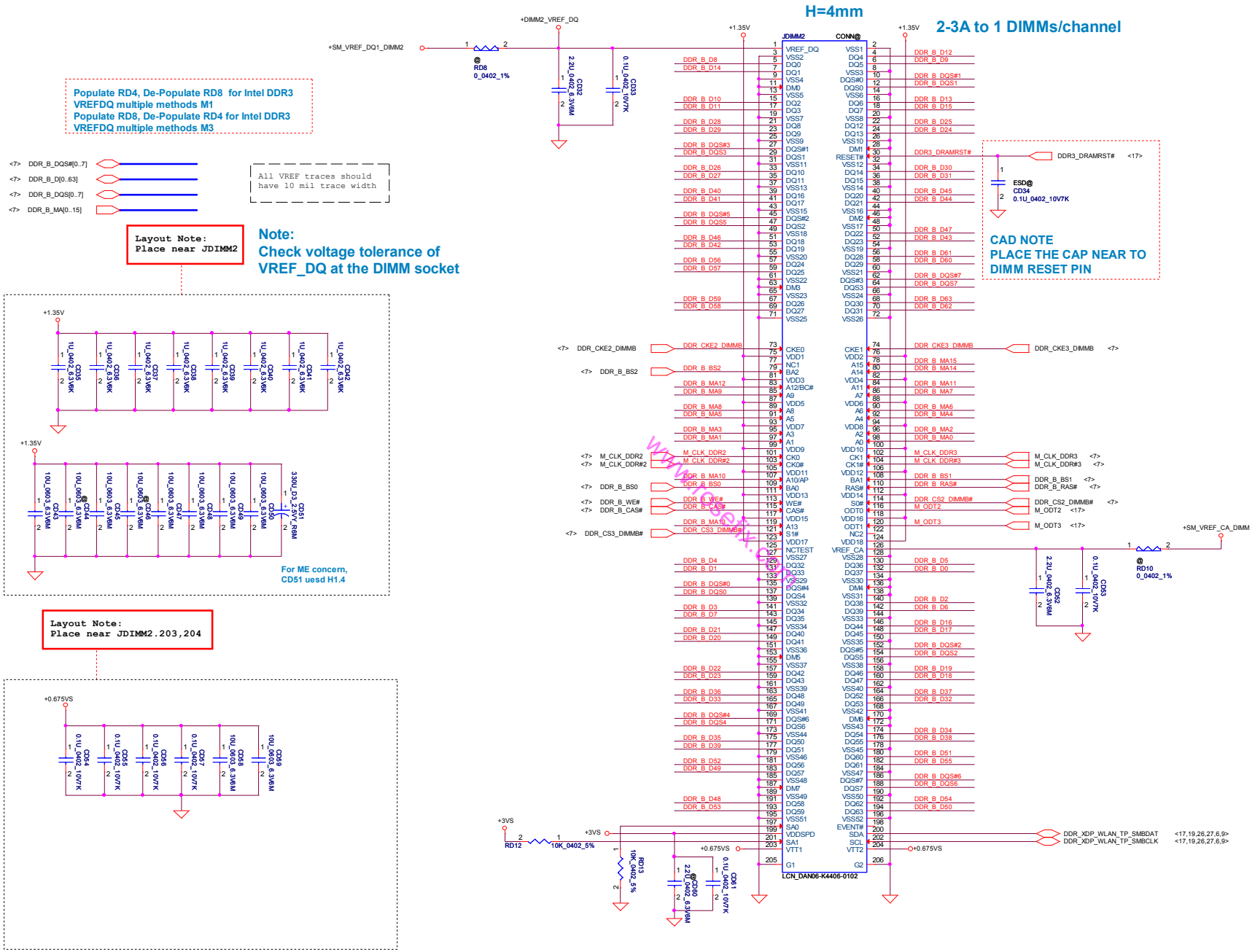

Security Classification	Compal Secret Data		
Issued Date	2013/05/29	Deciphered Date	2014/06/01

THIS SHEET OF ENGINEERING DRAWING IS THE PROPRIETARY PROPERTY OF COMPAL ELECTRONICS, INC. AND CONTAINS CONFIDENTIAL AND TRADE SECRET INFORMATION. THIS SHEET MAY NOT BE TRANSFERED FROM THE CUSTODY OF THE COMPETENT DIVISION OF R&D DEPARTMENT EXCEPT AS AUTHORIZED BY COMPAL ELECTRONICS, INC. NEITHER THIS SHEET NOR THE INFORMATION IT CONTAINS MAY BE USED BY OR DISCLOSED TO ANY THIRD PARTY WITHOUT PRIOR WRITTEN CONSENT OF COMPAL ELECTRONICS, INC.

Compal Electronics, Inc.

Title: **DDRIII DIMMB**

Size: | Document Number: **LA-9982P** | Rev: 3.0

Date: Wednesday, May 29, 2013 | Sheet 18 of 57

www.vinafix.vn

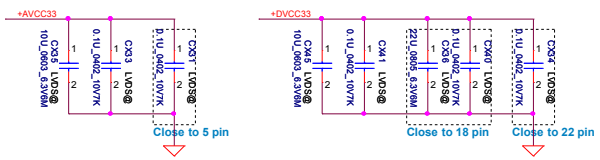

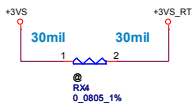

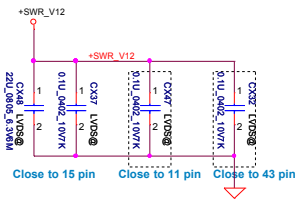

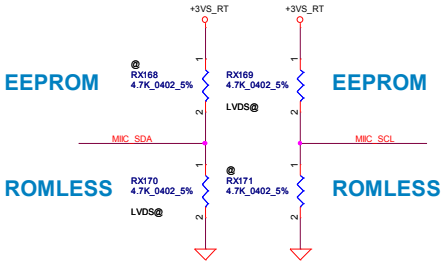

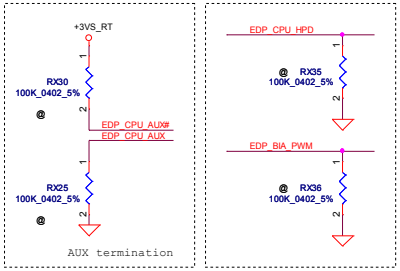

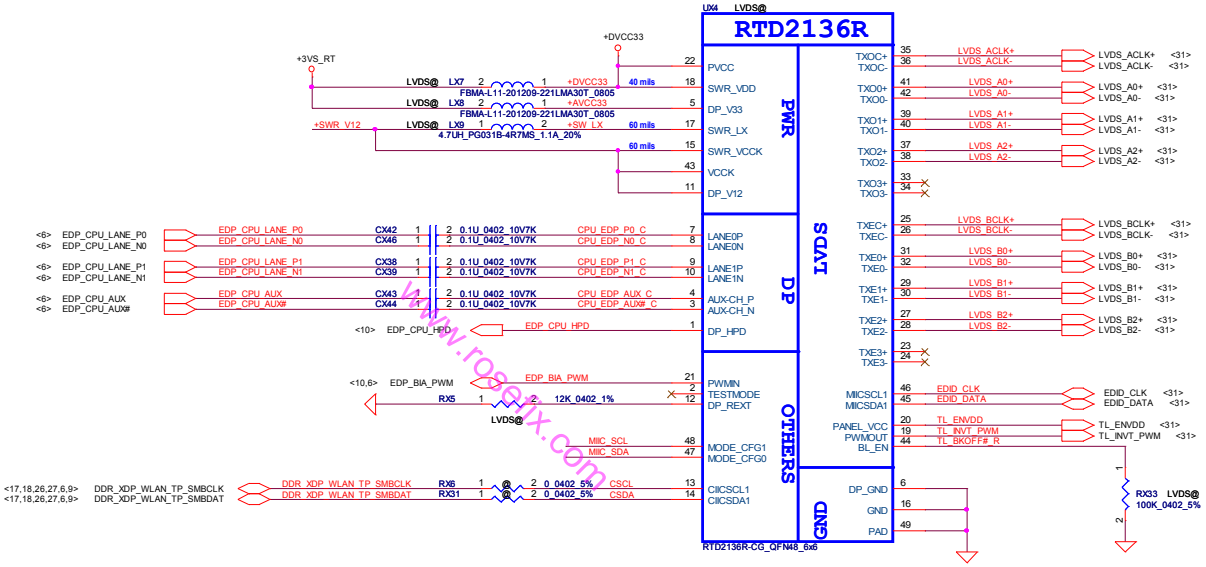

www.roseflix.com

RTD2136S : SA00004NW10
RTD2136R : SA000067100

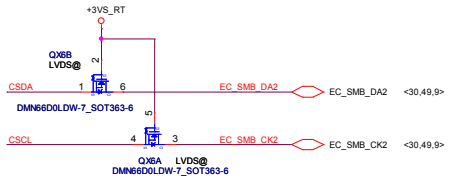

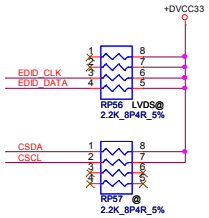

Vendor advise reserve it

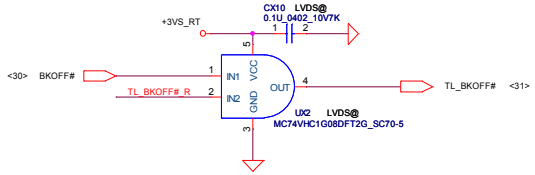

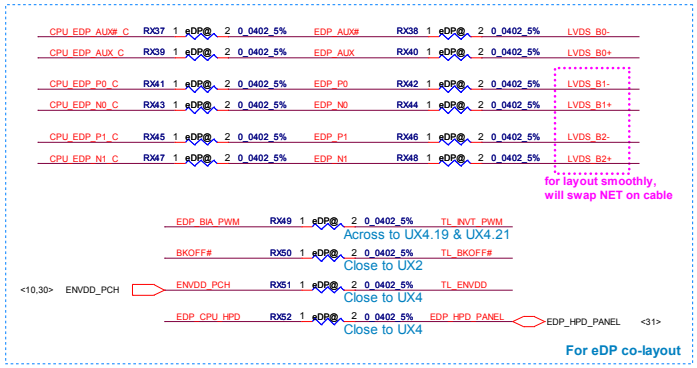

Security Classification	Compal Secret Data			Compal Electronics, Inc.
Issued Date	2013/05/29	Deciphered Date	2014/06/01	Title: eDP to LVDS converter
				Size / Document Number: LA-9982P / Rev: 3.0
				Date: Wednesday, May 29, 2013 / Sheet 19 of 57

THIS SHEET OF ENGINEERING DRAWING IS THE PROPRIETARY PROPERTY OF COMPAL ELECTRONICS, INC. AND CONTAINS CONFIDENTIAL AND TRADE SECRET INFORMATION. THIS SHEET MAY NOT BE TRANSFERRED FROM THE CUSTODY OF THE COMPETENT DIVISION OF R&D DEPARTMENT EXCEPT AS AUTHORIZED BY COMPAL ELECTRONICS, INC. NEITHER THIS SHEET NOR THE INFORMATION IT CONTAINS MAY BE USED BY OR DISCLOSED TO ANY THIRD PARTY WITHOUT PRIOR WRITTEN CONSENT OF COMPAL ELECTRONICS, INC.

www.vinafix.vn

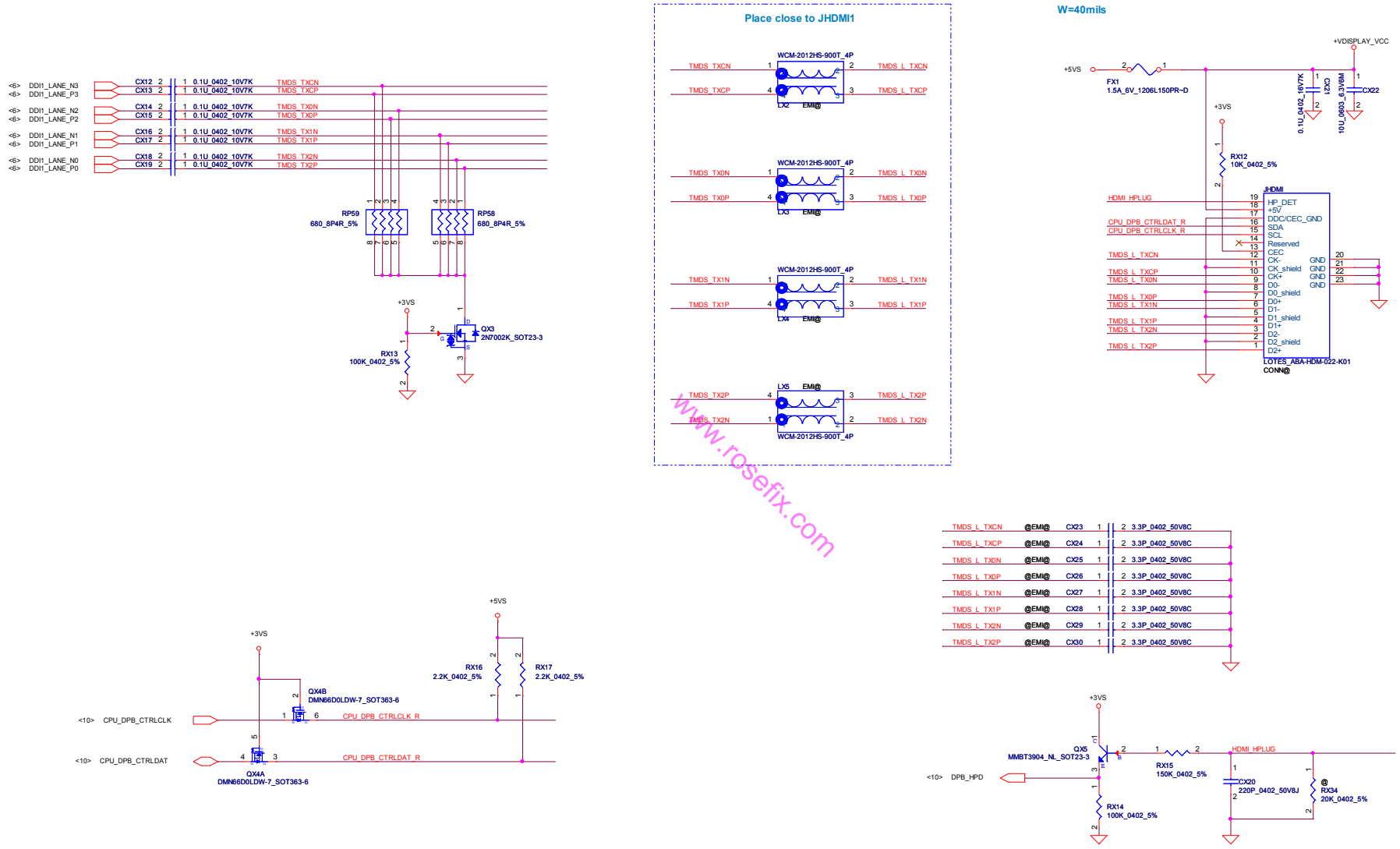

www.rosefix.com

www.vinafix.vn

Security Classification	Compal Secret Data		Compal Electronics, Inc.
Issued Date: 2013/05/29	Deciphered Date 2014/06/01		Title: HDMI
			Size: Document Number: LA-9982P Rev: 3.0
			Date: Wednesday, May 29, 2013 Sheet 20 of 57

THIS SHEET OF ENGINEERING DRAWING IS THE PROPRIETARY PROPERTY OF COMPAL ELECTRONICS, INC. AND CONTAINS CONFIDENTIAL AND TRADE SECRET INFORMATION. THIS SHEET MAY NOT BE TRANSFERRED FROM THE CUSTODY OF THE COMPETENT DIVISION OF R&D DEPARTMENT EXCEPT AS AUTHORIZED BY COMPAL ELECTRONICS, INC. NEITHER THIS SHEET NOR THE INFORMATION IT CONTAINS MAY BE USED BY OR DISCLOSED TO ANY THIRD PARTY WITHOUT PRIOR WRITTEN CONSENT OF COMPAL ELECTRONICS, INC.

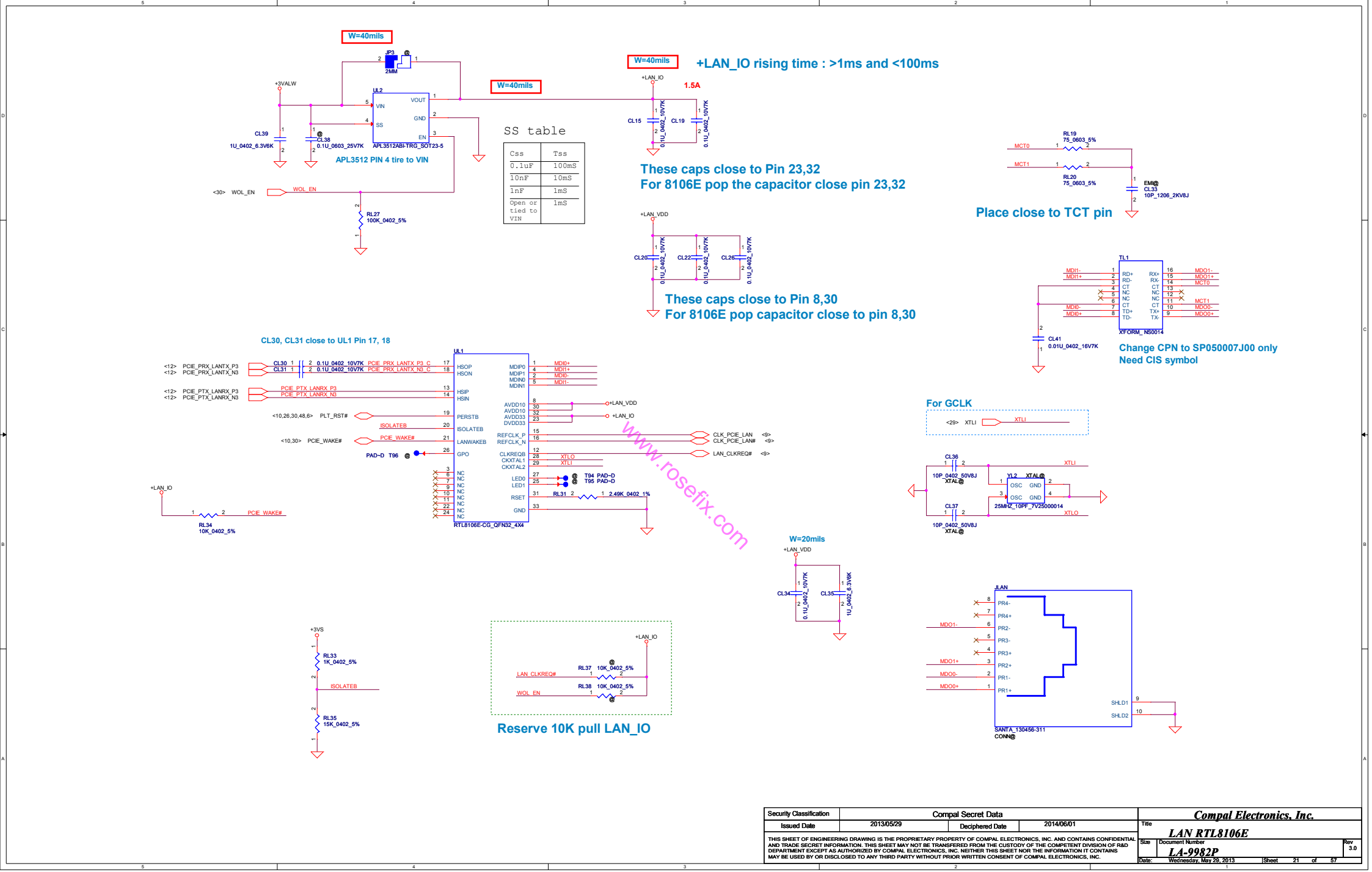

Security Classification	Compal Secret Data		
Issued Date	2013/05/29	Deciphered Date	2014/06/01

THIS SHEET OF ENGINEERING DRAWING IS THE PROPRIETARY PROPERTY OF COMPAL ELECTRONICS, INC. AND CONTAINS CONFIDENTIAL AND TRADE SECRET INFORMATION. THIS SHEET MAY NOT BE TRANSFERED FROM THE CUSTODY OF THE COMPETENT DIVISION OF R&D DEPARTMENT EXCEPT AS AUTHORIZED BY COMPAL ELECTRONICS, INC. NEITHER THIS SHEET NOR THE INFORMATION IT CONTAINS MAY BE USED BY OR DISCLOSED TO ANY THIRD PARTY WITHOUT PRIOR WRITTEN CONSENT OF COMPAL ELECTRONICS, INC.

Compal Electronics, Inc.

Title: LAN RTL8106E

Size | Document Number: LA-9982P | Rev: 3.0

Date: Wednesday, May 29, 2013 | Sheet 21 of 57

www.vinafix.vn

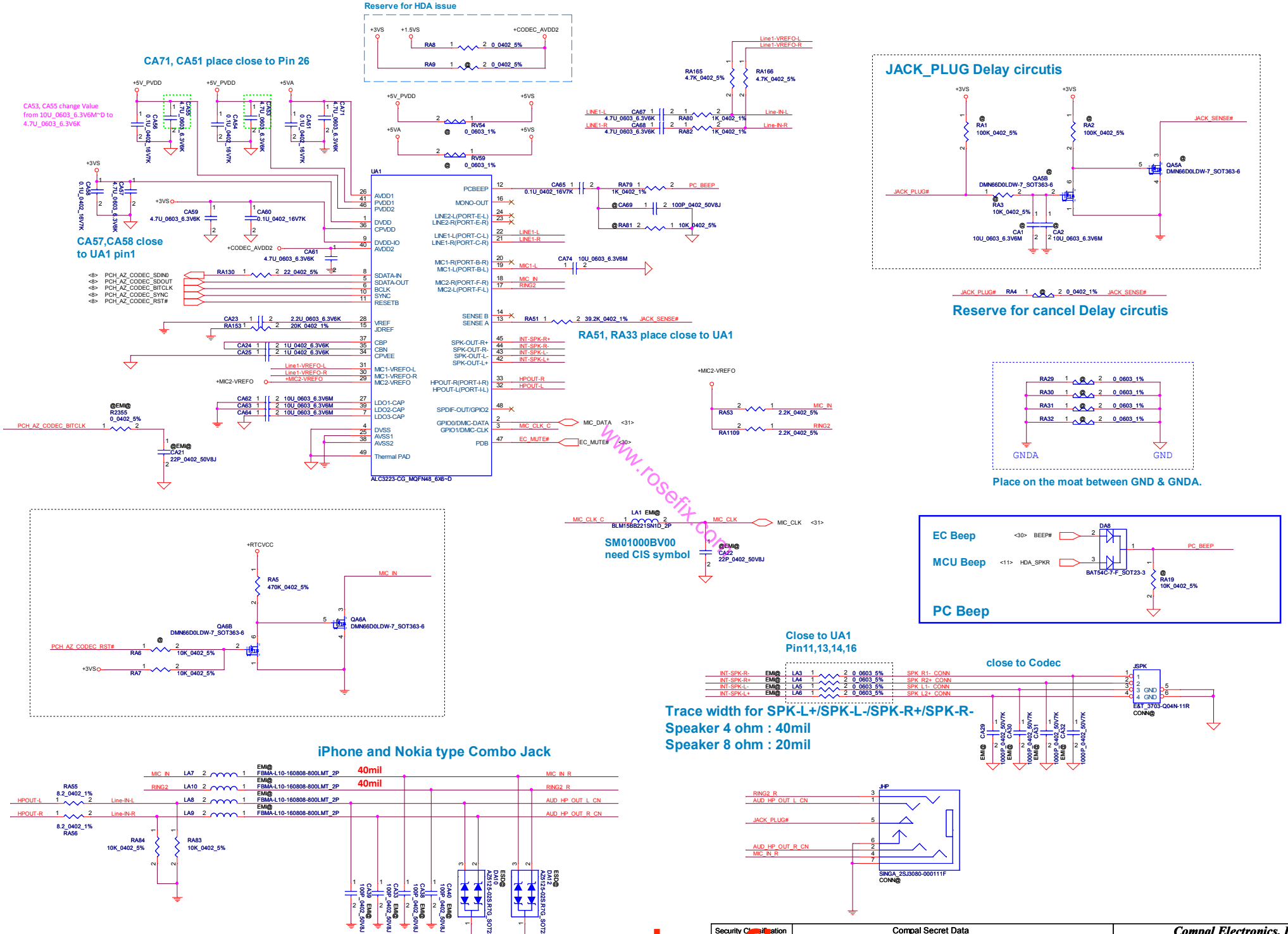

www.rosefix.com
www.vinafix.vn

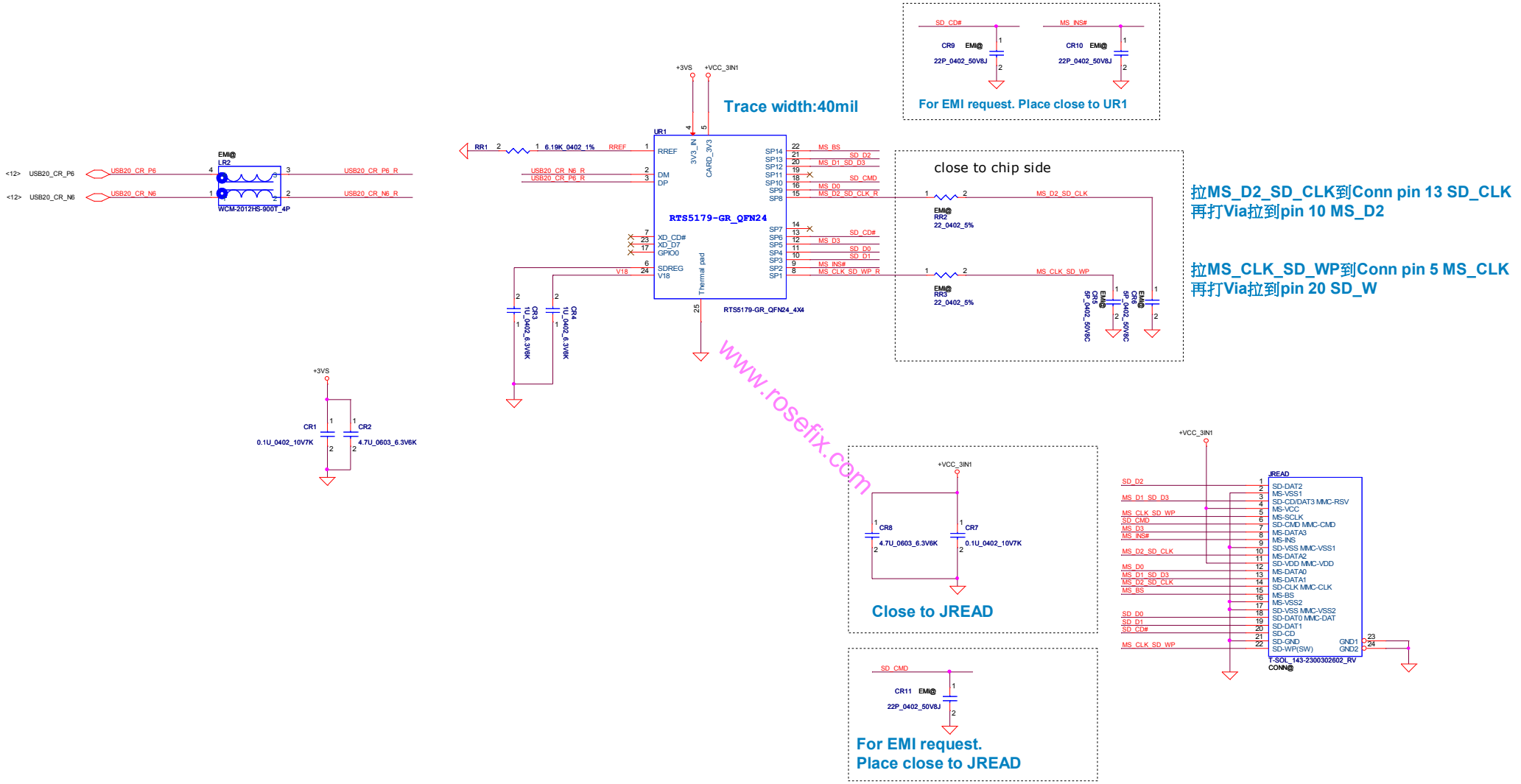

www.rosefix.com

www.vinafix.vn

Security Classification	Compal Secret Data		
Issued Date	2013/05/29	Deciphered Date	2014/06/01

THIS SHEET OF ENGINEERING DRAWING IS THE PROPRIETARY PROPERTY OF COMPAL ELECTRONICS, INC. AND CONTAINS CONFIDENTIAL AND TRADE SECRET INFORMATION. THIS SHEET MAY NOT BE TRANSFERED FROM THE CUSTODY OF THE COMPETENT DIVISION OF R&D DEPARTMENT EXCEPT AS AUTHORIZED BY COMPAL ELECTRONICS, INC. NEITHER THIS SHEET NOR THE INFORMATION IT CONTAINS MAY BE USED BY OR DISCLOSED TO ANY THIRD PARTY WITHOUT PRIOR WRITTEN CONSENT OF COMPAL ELECTRONICS, INC.

Compal Electronics, Inc.

Title: **Card Reader RTS5179**

Size: | Document Number: **LA-9982P** | Rev: 3.0

Date: Wednesday, May 29, 2013 | Sheet 23 of 57

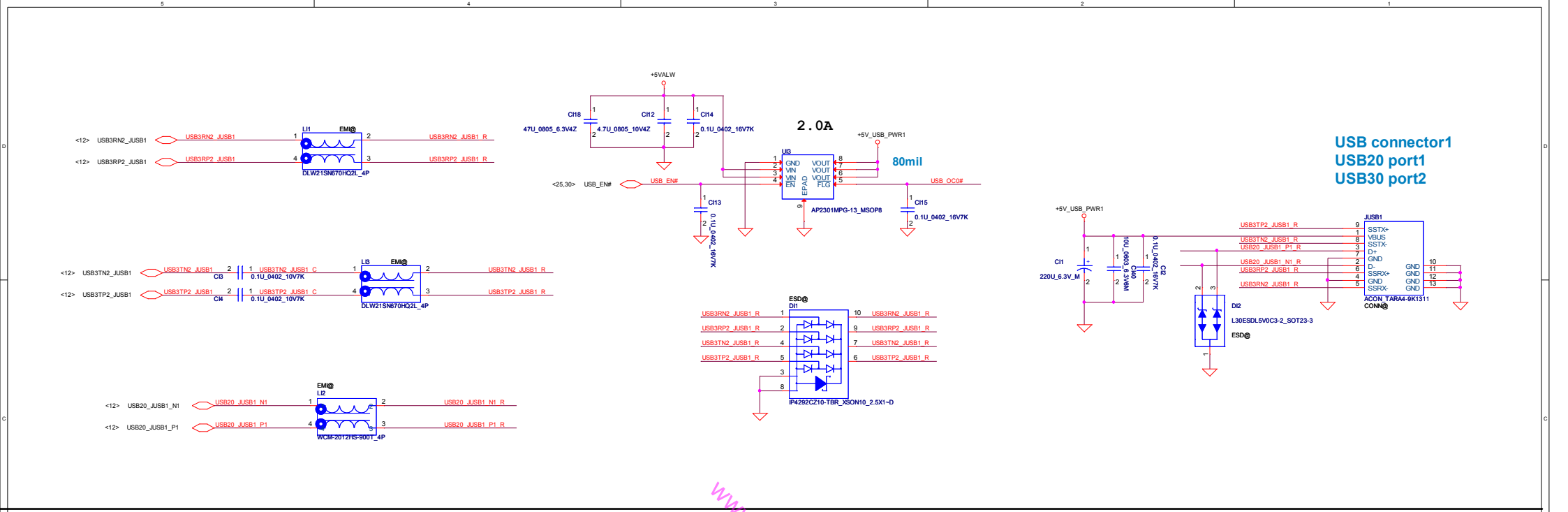

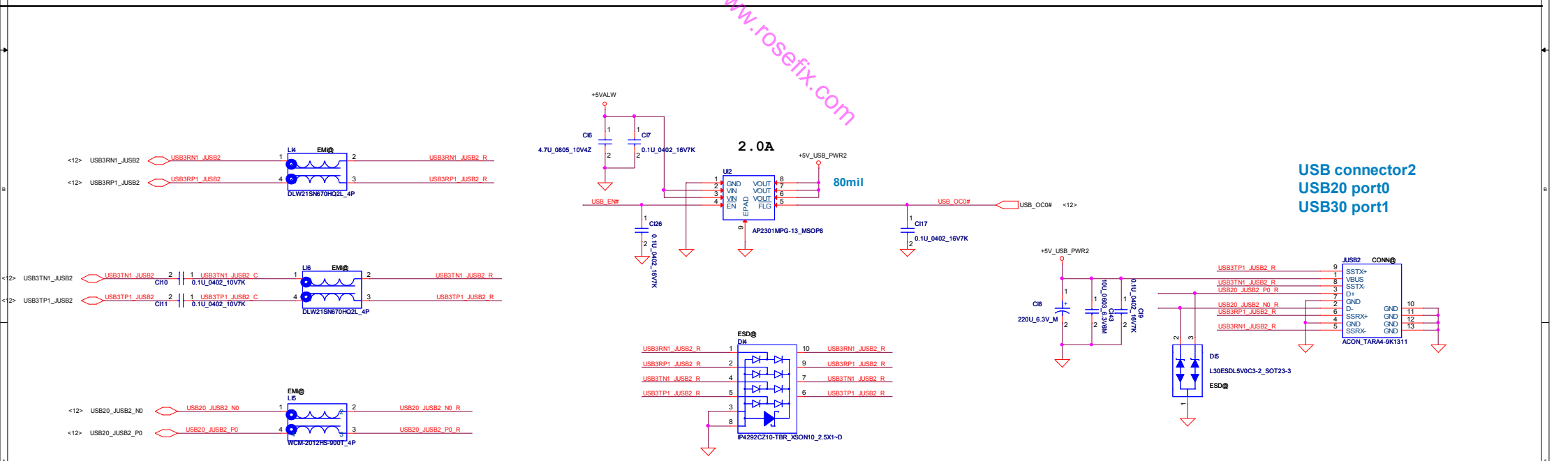

www.rosefix.com

www.vinafix.vn

Security Classification	Compal Secret Data		Compal Electronics, Inc.
Issued Date	2013/05/29	Deciphered Date	2014/06/01

THIS SHEET OF ENGINEERING DRAWING IS THE PROPRIETARY PROPERTY OF COMPAL ELECTRONICS, INC. AND CONTAINS CONFIDENTIAL AND TRADE SECRET INFORMATION. THIS SHEET MAY NOT BE TRANSFERED FROM THE CUSTODY OF THE COMPETENT DIVISION OF R&D DEPARTMENT EXCEPT AS AUTHORIZED BY COMPAL ELECTRONICS, INC. NEITHER THIS SHEET NOR THE INFORMATION IT CONTAINS MAY BE USED BY OR DISCLOSED TO ANY THIRD PARTY WITHOUT PRIOR WRITTEN CONSENT OF COMPAL ELECTRONICS, INC.

Title	USB3.0		
Size	Document Number		Rev
	LA-9982P		3.0
Date: Wednesday, May 29, 2013	Sheet 24 of 57		

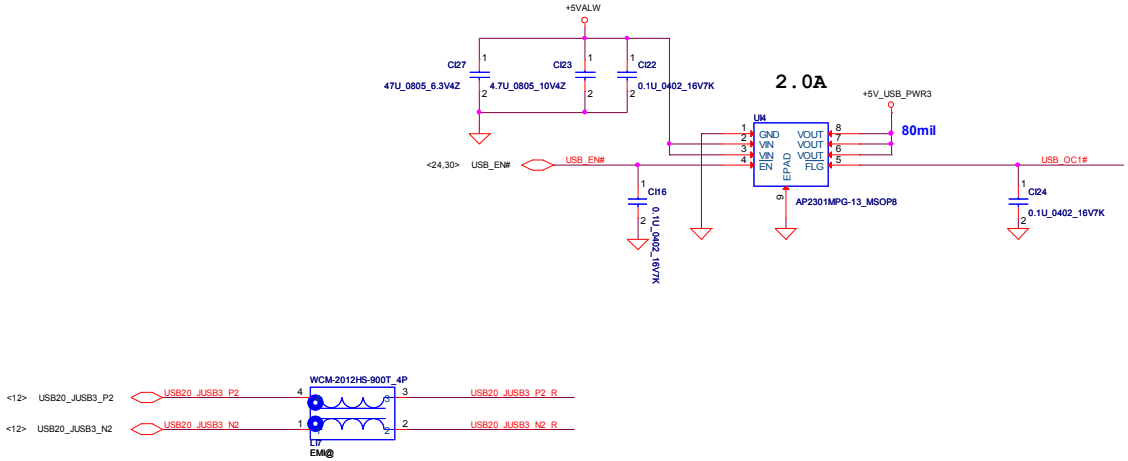

USB connector3
USB20 port2

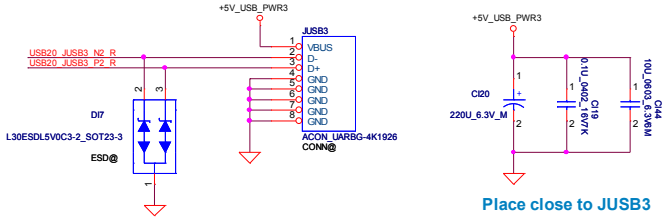

Place close to JUSB3

www.rosefix.com

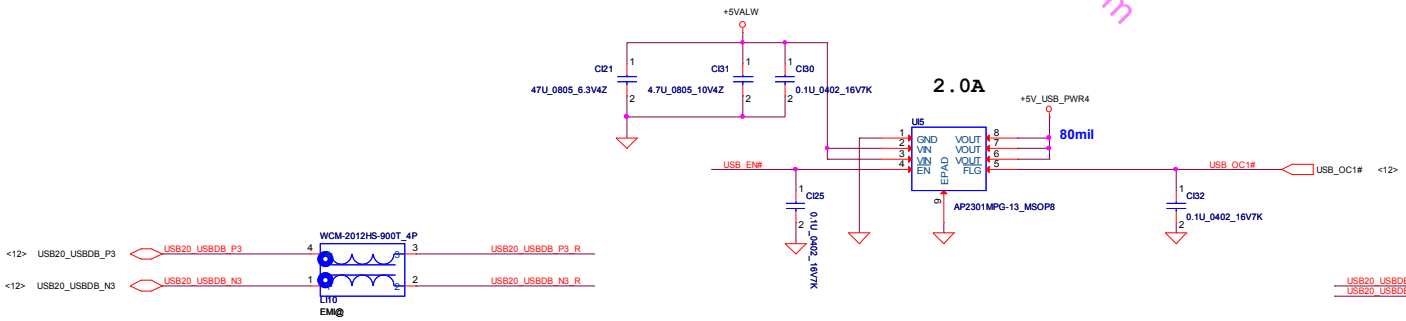

USB connector4
USB20 port3

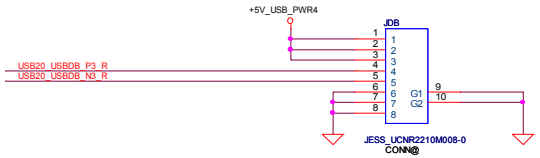

2nd: SP01001EX00
Main: SP01001AA00
Change CONN symbol for DFB

www.vinafix.vn

Security Classification	Compal Secret Data		Compal Electronics, Inc.
Issued Date: 2013/05/29	Deciphered Date 2014/06/01		Title: MB to USB2.0 DB
			Size / Document Number: LA-9982P / Rev: 3.0
			Date: Wednesday, May 29, 2013 / Sheet 25 of 57

THIS SHEET OF ENGINEERING DRAWING IS THE PROPRIETARY PROPERTY OF COMPAL ELECTRONICS, INC. AND CONTAINS CONFIDENTIAL AND TRADE SECRET INFORMATION. THIS SHEET MAY NOT BE TRANSFERED FROM THE CUSTODY OF THE COMPETENT DIVISION OF R&D DEPARTMENT EXCEPT AS AUTHORIZED BY COMPAL ELECTRONICS, INC. NEITHER THIS SHEET NOR THE INFORMATION IT CONTAINS MAY BE USED BY OR DISCLOSED TO ANY THIRD PARTY WITHOUT PRIOR WRITTEN CONSENT OF COMPAL ELECTRONICS, INC.

CC47靠近wlan connector

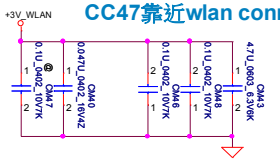

Mini WLAN/WIMAX H=6.7

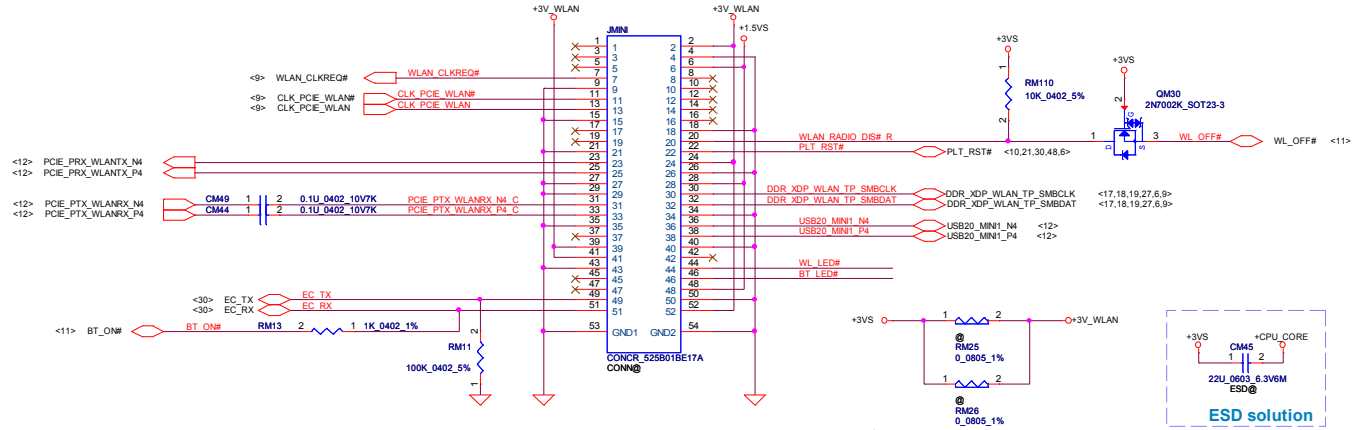

www.rosefix.com

HDD LED

10mils, All pins

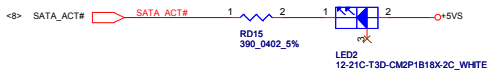

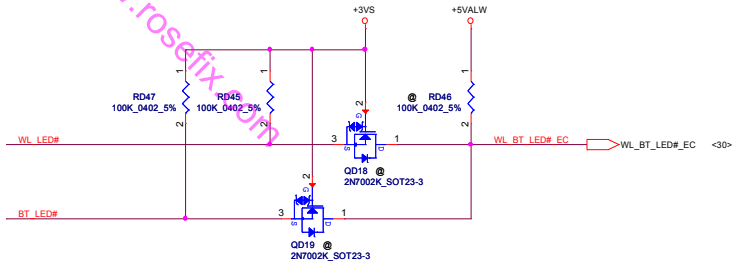

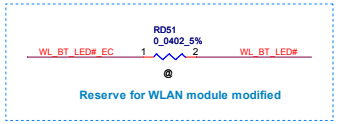

Power LED

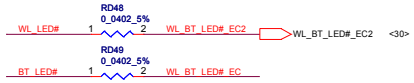

Wireless LED

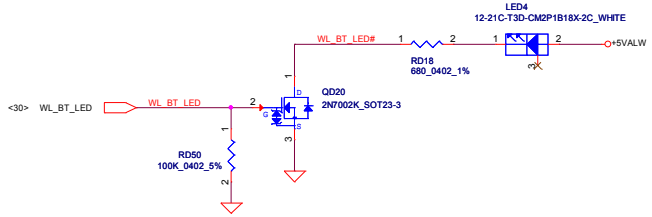

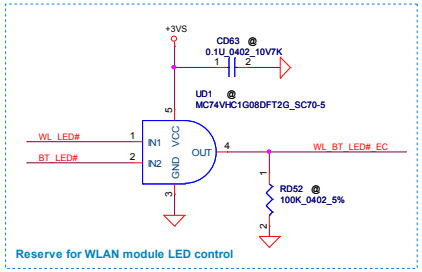

Battery LED

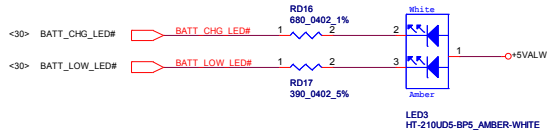

www.vinafix.vn

Security Classification	Compal Secret Data		Compal Electronics, Inc.
Issued Date: 2013/05/29	Deciphered Date 2014/06/01		Title: Mini Card/LED
			Size: Document Number: LA-9982P Rev: 3.0
			Date: Wednesday, May 29, 2013 Sheet 26 of 57

THIS SHEET OF ENGINEERING DRAWING IS THE PROPRIETARY PROPERTY OF COMPAL ELECTRONICS, INC. AND CONTAINS CONFIDENTIAL AND TRADE SECRET INFORMATION. THIS SHEET MAY NOT BE TRANSFERED FROM THE CUSTODY OF THE COMPETENT DIVISION OF R&D DEPARTMENT EXCEPT AS AUTHORIZED BY COMPAL ELECTRONICS, INC. NEITHER THIS SHEET NOR THE INFORMATION IT CONTAINS MAY BE USED BY OR DISCLOSED TO ANY THIRD PARTY WITHOUT PRIOR WRITTEN CONSENT OF COMPAL ELECTRONICS, INC.

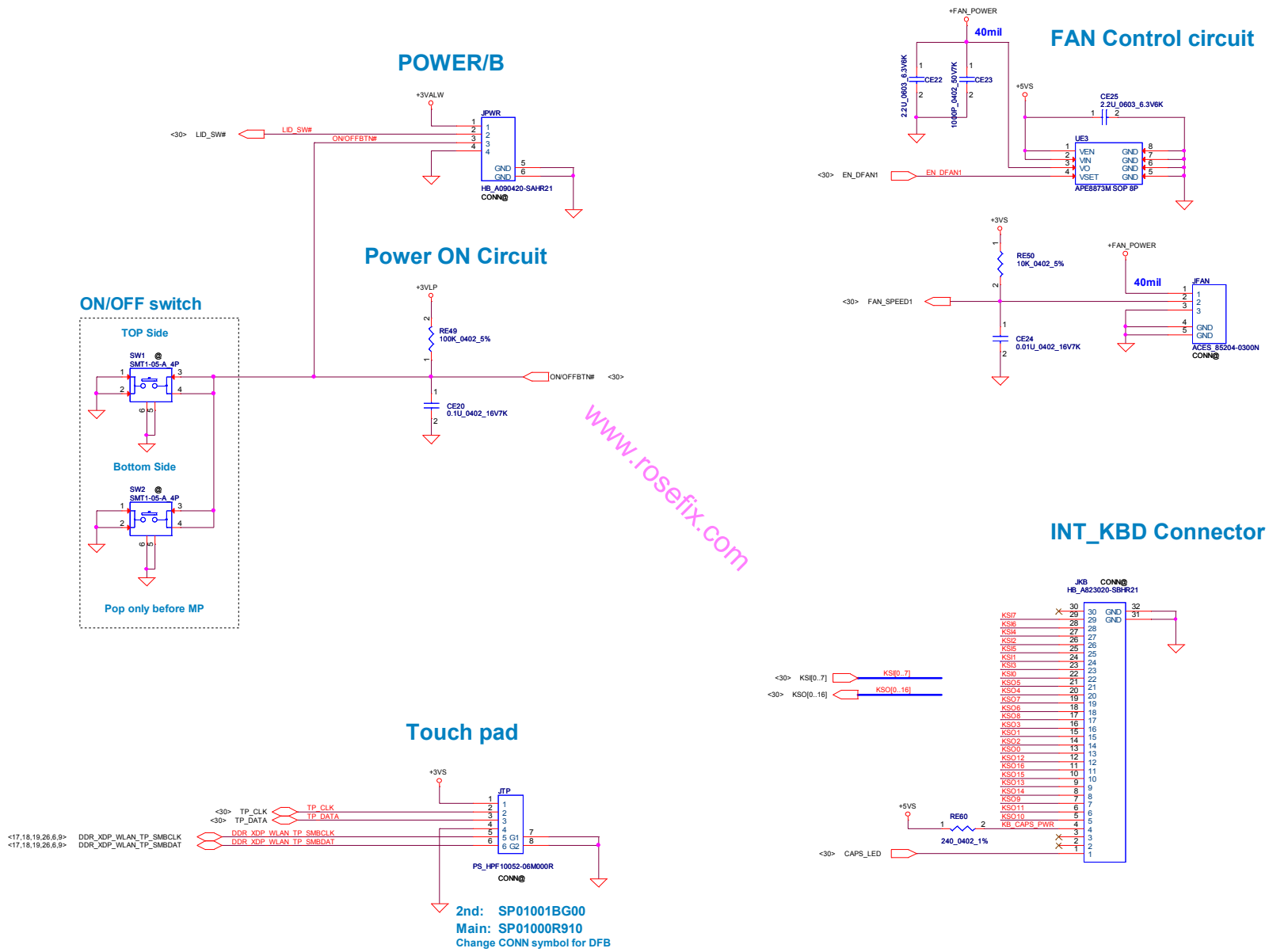

www.rosefix.com

www.vinafix.vn

Security Classification	Compal Secret Data		Compal Electronics, Inc.
Issued Date	2013/05/29	Deciphered Date	2014/06/01
Title	FAN/TP/PWR SW		
Size	Document Number LA-9982P		Rev 3.0
Date: Wednesday, May 29, 2013	Sheet 27 of 57		

THIS SHEET OF ENGINEERING DRAWING IS THE PROPRIETARY PROPERTY OF COMPAL ELECTRONICS, INC. AND CONTAINS CONFIDENTIAL AND TRADE SECRET INFORMATION. THIS SHEET MAY NOT BE TRANSFERED FROM THE CUSTODY OF THE COMPETENT DIVISION OF R&D DEPARTMENT EXCEPT AS AUTHORIZED BY COMPAL ELECTRONICS, INC. NEITHER THIS SHEET NOR THE INFORMATION IT CONTAINS MAY BE USED BY OR DISCLOSED TO ANY THIRD PARTY WITHOUT PRIOR WRITTEN CONSENT OF COMPAL ELECTRONICS, INC.

+5VS and +3VS switch

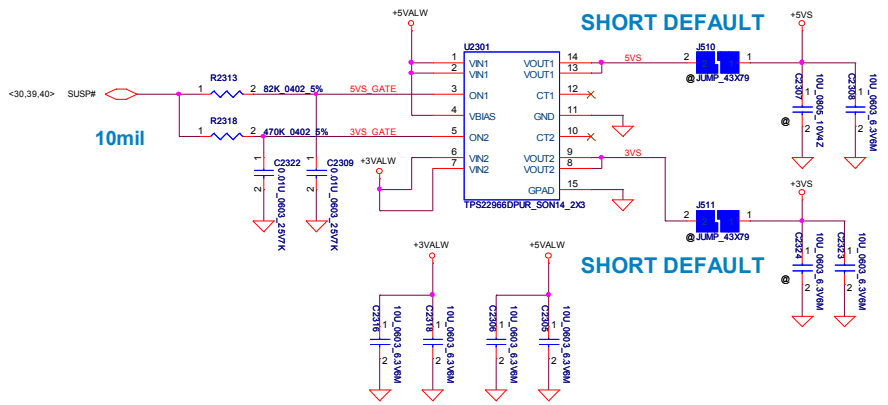

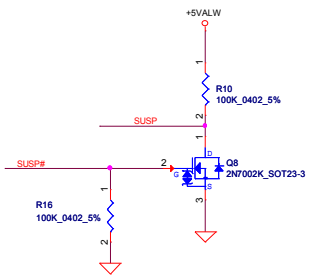

www.rosefix.com

+3VALW_PCH switch

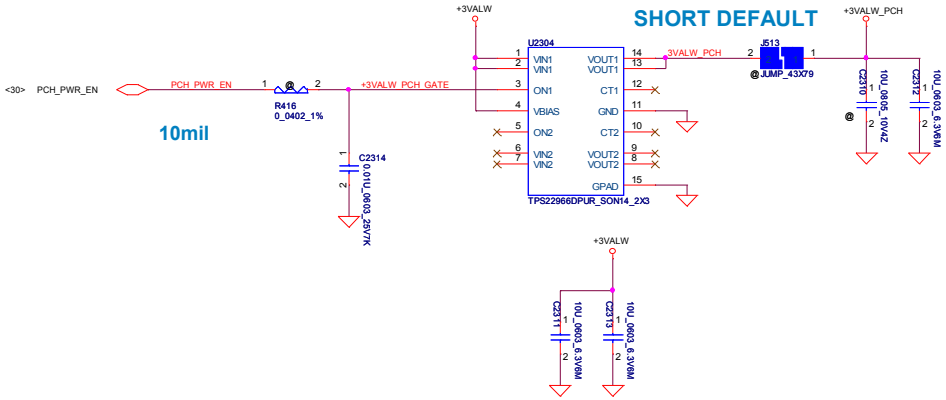

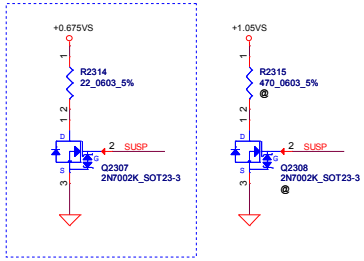

For Intel S3 Power Reduction

www.vinafix.vn

Security Classification	Compal Secret Data		Compal Electronics, Inc.
Issued Date: 2013/05/29	Deciphered Date 2014/06/01		Title: DC/DC Interface
			Size: Document Number: LA-9982P Rev: 3.0
			Date: Wednesday, May 29, 2013 Sheet 28 of 57

THIS SHEET OF ENGINEERING DRAWING IS THE PROPRIETARY PROPERTY OF COMPAL ELECTRONICS, INC. AND CONTAINS CONFIDENTIAL AND TRADE SECRET INFORMATION. THIS SHEET MAY NOT BE TRANSFERRED FROM THE CUSTODY OF THE COMPETENT DIVISION OF R&D DEPARTMENT EXCEPT AS AUTHORIZED BY COMPAL ELECTRONICS, INC. NEITHER THIS SHEET NOR THE INFORMATION IT CONTAINS MAY BE USED BY OR DISCLOSED TO ANY THIRD PARTY WITHOUT PRIOR WRITTEN CONSENT OF COMPAL ELECTRONICS, INC.

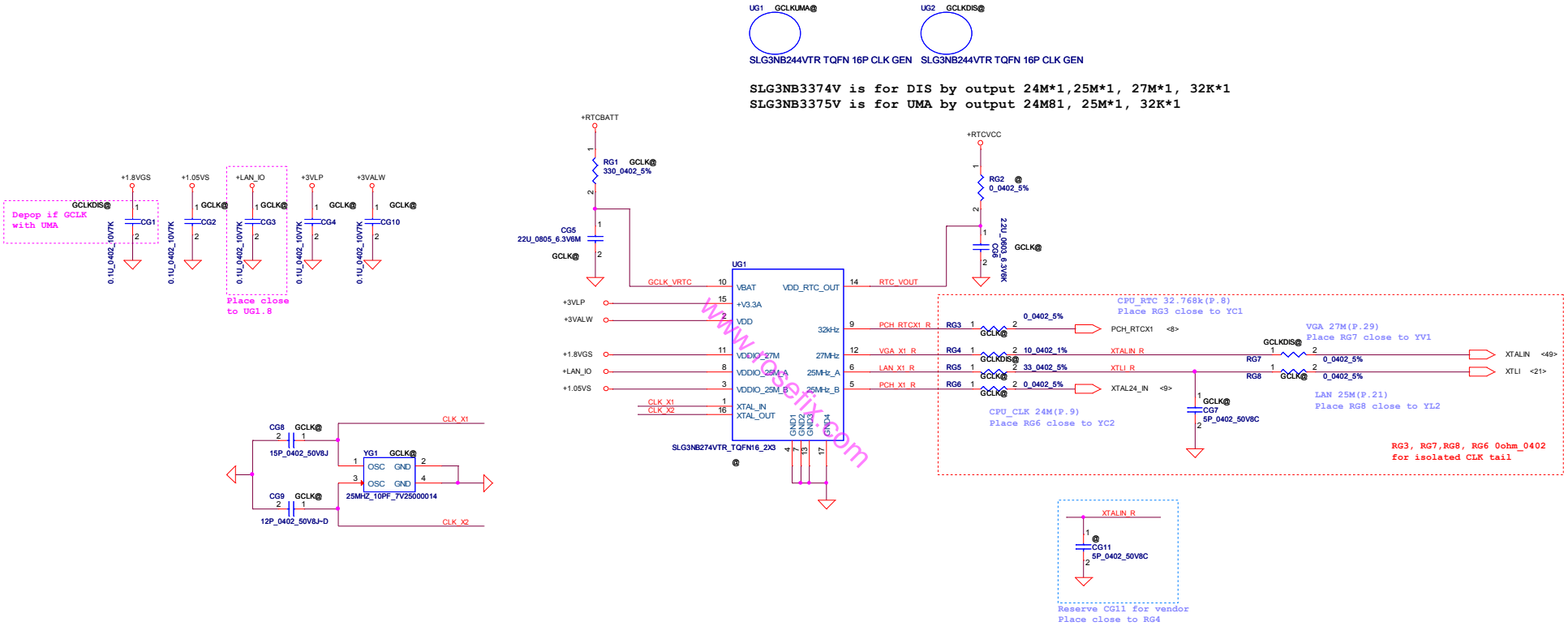

www.vinafix.com

Security Classification	Compal Secret Data		Compal Electronics, Inc.
Issued Date: 2013/05/29	Deciphered Date 2014/06/01		Title: GCLK
			Size: Document Number: LA-9982P Rev 3.0
			Date: Wednesday, May 29, 2013 Sheet 23 of 57

THIS SHEET OF ENGINEERING DRAWING IS THE PROPRIETARY PROPERTY OF COMPAL ELECTRONICS, INC. AND CONTAINS CONFIDENTIAL AND TRADE SECRET INFORMATION. THIS SHEET MAY NOT BE TRANSFERED FROM THE CUSTODY OF THE COMPETENT DIVISION OF R&D DEPARTMENT EXCEPT AS AUTHORIZED BY COMPAL ELECTRONICS, INC. NEITHER THIS SHEET NOR THE INFORMATION IT CONTAINS MAY BE USED BY OR DISCLOSED TO ANY THIRD PARTY WITHOUT PRIOR WRITTEN CONSENT OF COMPAL ELECTRONICS, INC.

SD028000080	0_0402_5%
SD034120280	12K_0402_1%
SD034100300	27K_0402_1%
SD034430280	43K_0402_1%
SD034560280	56K_0402_1%
SD034750280	75K_0402_1%
SD034100380	100K_0402_1%
SD034130380	130K_0402_1%
SD034160380	160K_0402_1%
SD034200380	200K_0402_1%
SD000001B80	240K_0402_1%
SD00000G280	270K_0402_1%
SD034330380	330K_0402_1%
SD028430380	430K_0402_1%

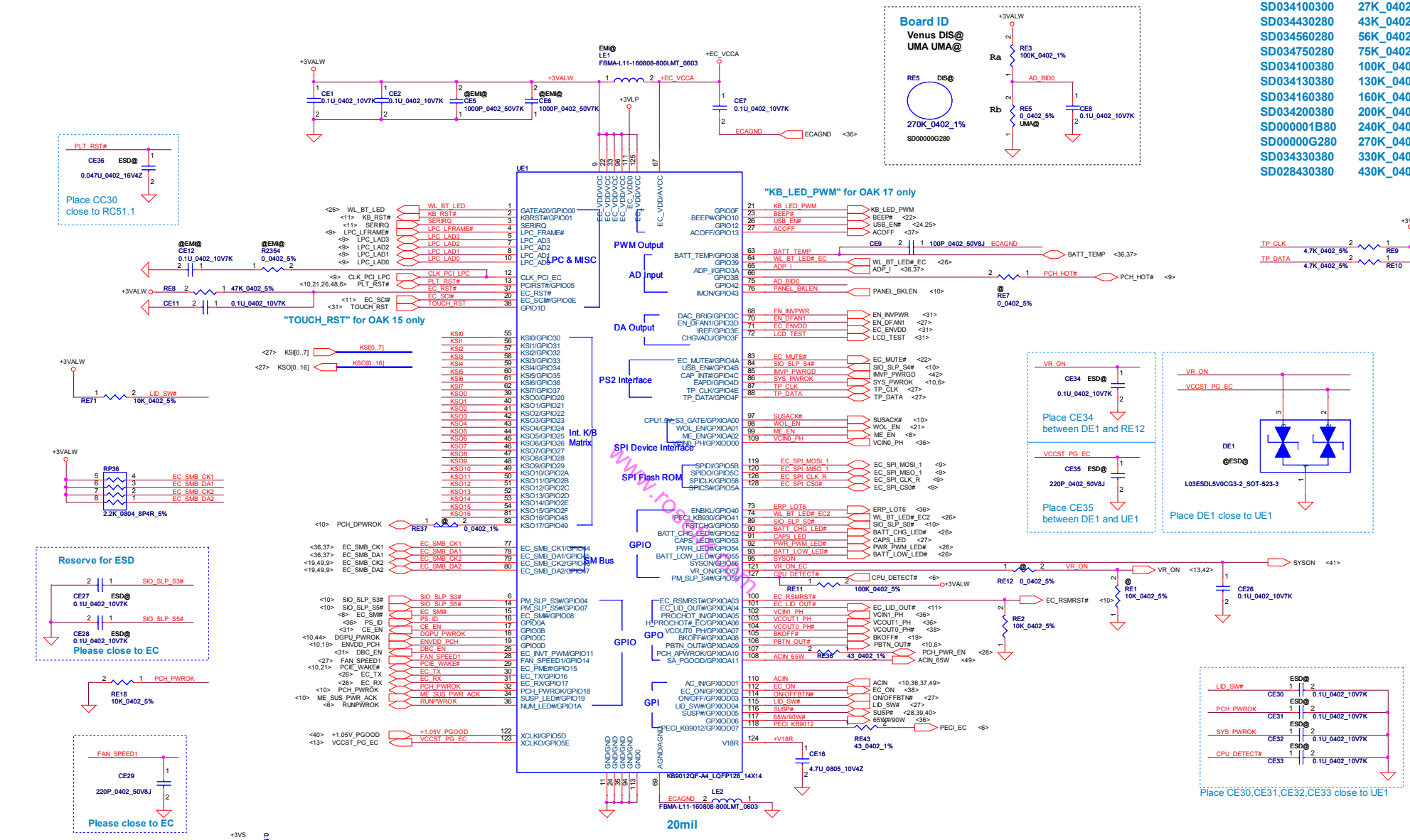

www.vinafix.vn

Security Classification	Compal Secret Data		Compal Electronics, Inc.
Issued Date: 2013/05/29	Deciphered Date 2014/06/01		Title: EC ENE-KB9012
			Size: Document Number: LA-9982P Rev 3.0
			Date: Wednesday, May 29, 2013 Sheet 30 of 57

THIS SHEET OF ENGINEERING DRAWING IS THE PROPRIETARY PROPERTY OF COMPAL ELECTRONICS, INC. AND CONTAINS CONFIDENTIAL AND TRADE SECRET INFORMATION. THIS SHEET MAY NOT BE TRANSFERED FROM THE CUSTODY OF THE COMPETENT DIVISION OF R&D DEPARTMENT EXCEPT AS AUTHORIZED BY COMPAL ELECTRONICS, INC. NEITHER THIS SHEET NOR THE INFORMATION IT CONTAINS MAY BE USED BY OR DISCLOSED TO ANY THIRD PARTY WITHOUT PRIOR WRITTEN CONSENT OF COMPAL ELECTRONICS, INC.

LCD PWR CTRL

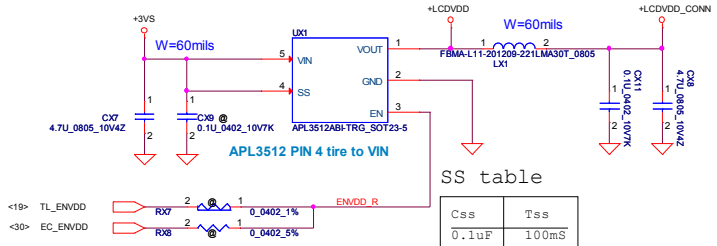

SS table

Css	Tss
0.1uF	100mS
10nF	10mS
1nF	1mS
Open or tied to VIN	1mS

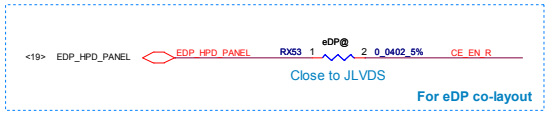

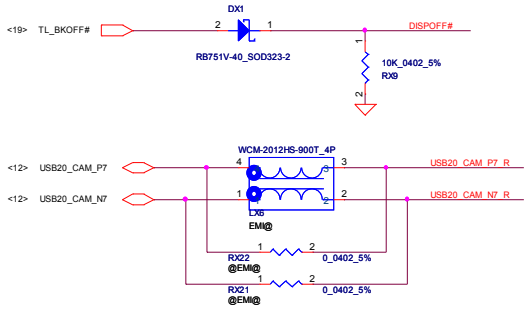

LVDS Connector

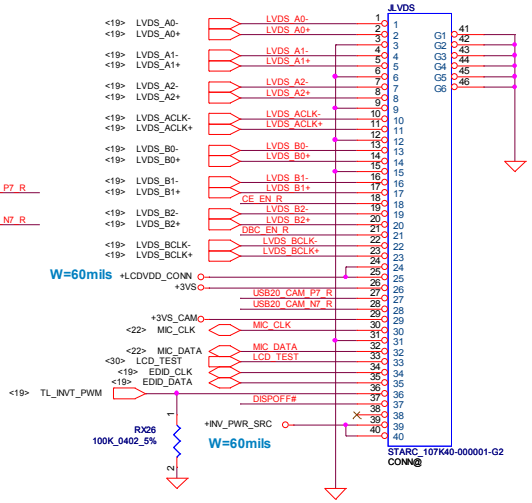

CE_EN_R only for reserve.

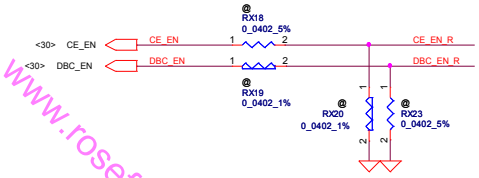

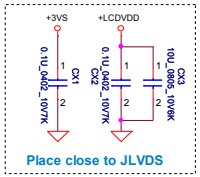

LCD backlight PWR CTRL

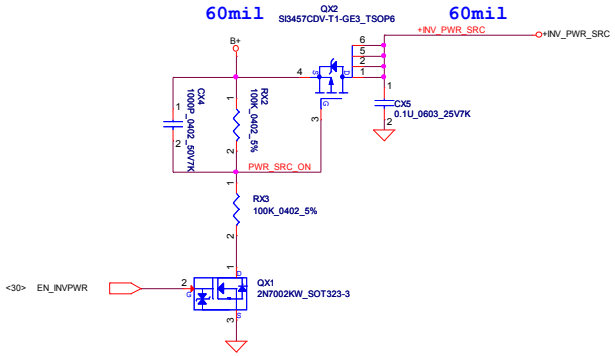

Webcam PWR CTRL

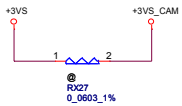

* Touch Screen Panel

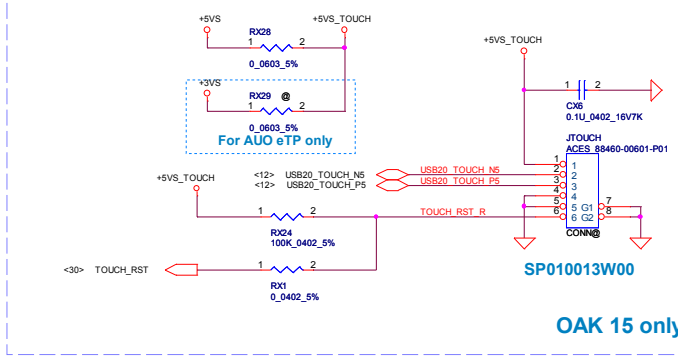

www.rosefix.com

www.vinafix.vn

Security Classification	Compal Secret Data		
Issued Date	2013/05/29	Deciphered Date	2014/06/01

THIS SHEET OF ENGINEERING DRAWING IS THE PROPRIETARY PROPERTY OF COMPAL ELECTRONICS, INC. AND CONTAINS CONFIDENTIAL AND TRADE SECRET INFORMATION. THIS SHEET MAY NOT BE TRANSFERED FROM THE CUSTODY OF THE COMPETENT DIVISION OF R&D DEPARTMENT EXCEPT AS AUTHORIZED BY COMPAL ELECTRONICS, INC. NEITHER THIS SHEET NOR THE INFORMATION IT CONTAINS MAY BE USED BY OR DISCLOSED TO ANY THIRD PARTY WITHOUT PRIOR WRITTEN CONSENT OF COMPAL ELECTRONICS, INC.

Compal Electronics, Inc.

Title: LVDS/webcam/touch

Size: | Document Number: LA-9982P | Rev: 3.0

Date: Wednesday, May 29, 2013 | Sheet 31 of 57

SATA HDD Connector

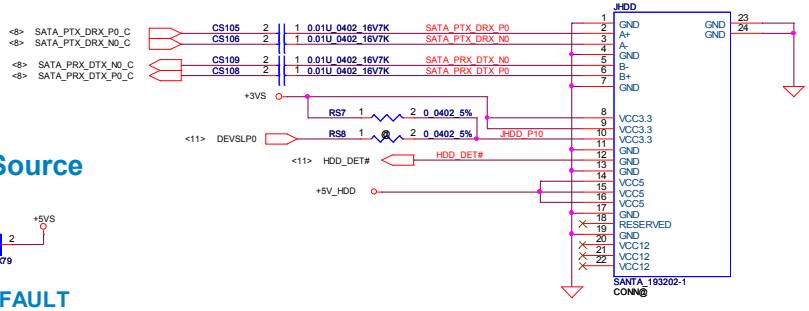

+5V_HDD Source

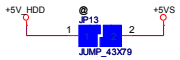

SHORT DEFAULT

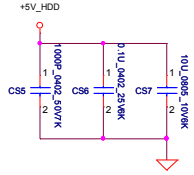

www.rosefix.com

ODD Power Control

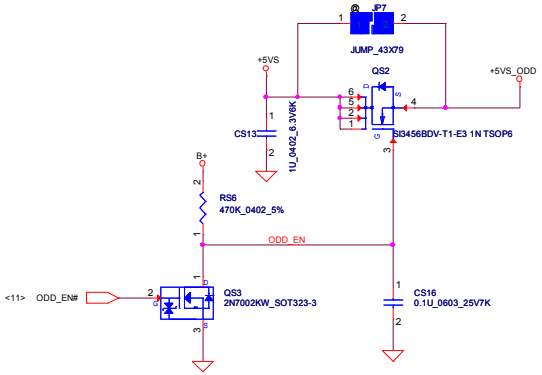

SATA ODD Connector

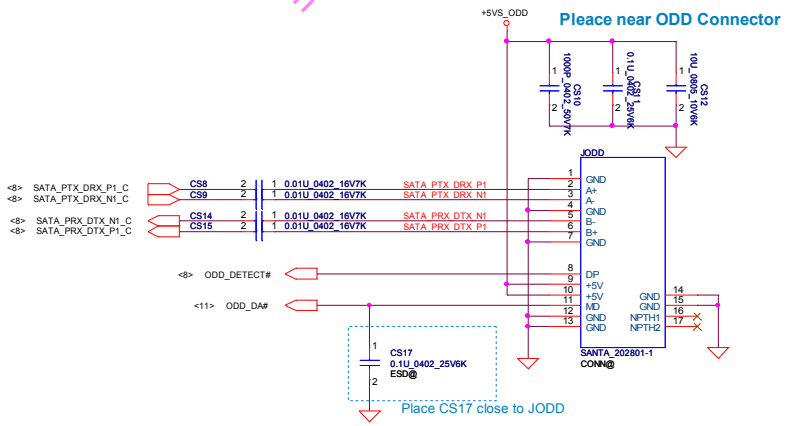

www.vinafix.vn

Security Classification	Compal Secret Data		
Issued Date	2013/05/29	Deciphered Date	2014/06/01

THIS SHEET OF ENGINEERING DRAWING IS THE PROPRIETARY PROPERTY OF COMPAL ELECTRONICS, INC. AND CONTAINS CONFIDENTIAL AND TRADE SECRET INFORMATION. THIS SHEET MAY NOT BE TRANSFERED FROM THE CUSTODY OF THE COMPETENT DIVISION OF R&D DEPARTMENT EXCEPT AS AUTHORIZED BY COMPAL ELECTRONICS, INC. NEITHER THIS SHEET NOR THE INFORMATION IT CONTAINS MAY BE USED BY OR DISCLOSED TO ANY THIRD PARTY WITHOUT PRIOR WRITTEN CONSENT OF COMPAL ELECTRONICS, INC.

Compal Electronics, Inc.

Title: **HDD/ODD**

Size: | Document Number: **LA-9982P** | Rev: 3.0

Date: Wednesday, May 29, 2013 | Sheet 32 of 57

Screw Hole

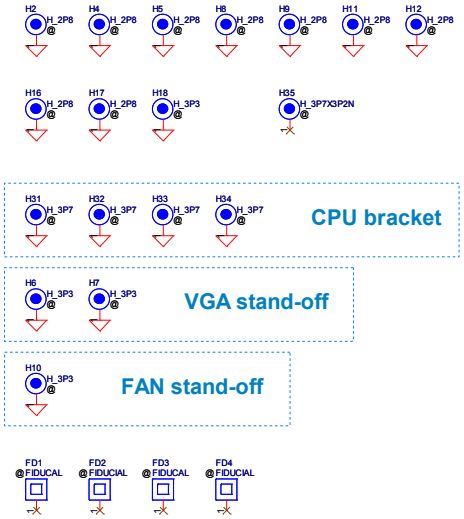

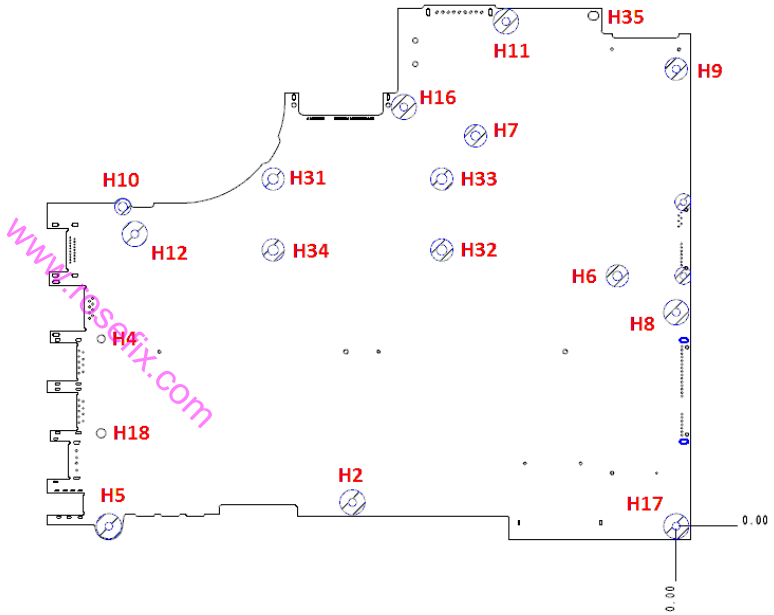

www.nsofix.com

Security Classification	Compal Secret Data		
Issued Date	2013/05/29	Deciphered Date	2014/06/01

THIS SHEET OF ENGINEERING DRAWING IS THE PROPRIETARY PROPERTY OF COMPAL ELECTRONICS, INC. AND CONTAINS CONFIDENTIAL AND TRADE SECRET INFORMATION. THIS SHEET MAY NOT BE TRANSFERED FROM THE CUSTODY OF THE COMPETENT DIVISION OF R&D DEPARTMENT EXCEPT AS AUTHORIZED BY COMPAL ELECTRONICS, INC. NEITHER THIS SHEET NOR THE INFORMATION IT CONTAINS MAY BE USED BY OR DISCLOSED TO ANY THIRD PARTY WITHOUT PRIOR WRITTEN CONSENT OF COMPAL ELECTRONICS, INC.

Compal Electronics, Inc.

Title: *Screw Hole*

Size | Document Number: *LA-9982P* | Rev: 3.0

Date: Wednesday, May 29, 2013 | Sheet 33 of 57

www.vinafix.vn

Version Change List (P. I. R. List) Page 1

Item	Page#	Title	Date	Request Owner	Issue Description	Solution Description	Rev.
1	34	Card Reader	2012/04/27	HW	The Card reader USB signal is incorrect.	SWAP UR1 USB signal P/N	0.2
2							
3							
4							
5							
6							
7							
8							
9							
10							
11							
12							
13							
14							
15							
16							
17							
18							
19							
20							
21							
22							
23							
24							
25							
26							
27							
28							
29							
30							
31							
32							
33							
34							
35							
36							
37							
38							
39							
40							
41							

www.rosefix.com

www.vinafix.vn

Security Classification: Compal Secret Data
Issued Date: 2013/05/29 Deciphered Date: 2014/06/01
THIS SHEET OF ENGINEERING DRAWING IS THE PROPRIETARY PROPERTY OF COMPAL ELECTRONICS, INC. AND CONTAINS CONFIDENTIAL AND TRADE SECRET INFORMATION. THIS SHEET MAY NOT BE TRANSFERRED FROM THE CUSTODY OF THE COMPETENT DIVISION OF R&D DEPARTMENT EXCEPT AS AUTHORIZED BY COMPAL ELECTRONICS, INC. NEITHER THIS SHEET NOR THE INFORMATION IT CONTAINS MAY BE USED BY OR DISCLOSED TO ANY THIRD PARTY WITHOUT PRIOR WRITTEN CONSENT OF COMPAL ELECTRONICS, INC.

Compal Electronics, Inc.

Title: HW-PIR Page.1

Size | Document Number: LA-9982P | Rev: 3.0

Date: Wednesday, May 29, 2013 | Sheet 34 of 57

Version Change List (P. I. R. List) Page 2

Item	Page#	Title	Date	Request Owner	Issue Description	Solution Description	Rev.
40							
41							
42							
43							
44							
45							
46							
47							
48							
49							
50							
51							
52							
53							
54							

www.rosefix.com

www.vinafix.vn

THIS SHEET OF ENGINEERING DRAWING IS THE PROPRIETARY PROPERTY OF COMPAL ELECTRONICS, INC. AND CONTAINS CONFIDENTIAL AND TRADE SECRET INFORMATION. THIS SHEET MAY NOT BE TRANSFERRED FROM THE CUSTODY OF THE COMPETENT DIVISION OF R&D DEPARTMENT EXCEPT AS AUTHORIZED BY COMPAL ELECTRONICS, INC. NEITHER THIS SHEET NOR THE INFORMATION IT CONTAINS MAY BE USED BY OR DISCLOSED TO ANY THIRD PARTY WITHOUT PRIOR WRITTEN CONSENT OF COMPAL ELECTRONICS, INC.

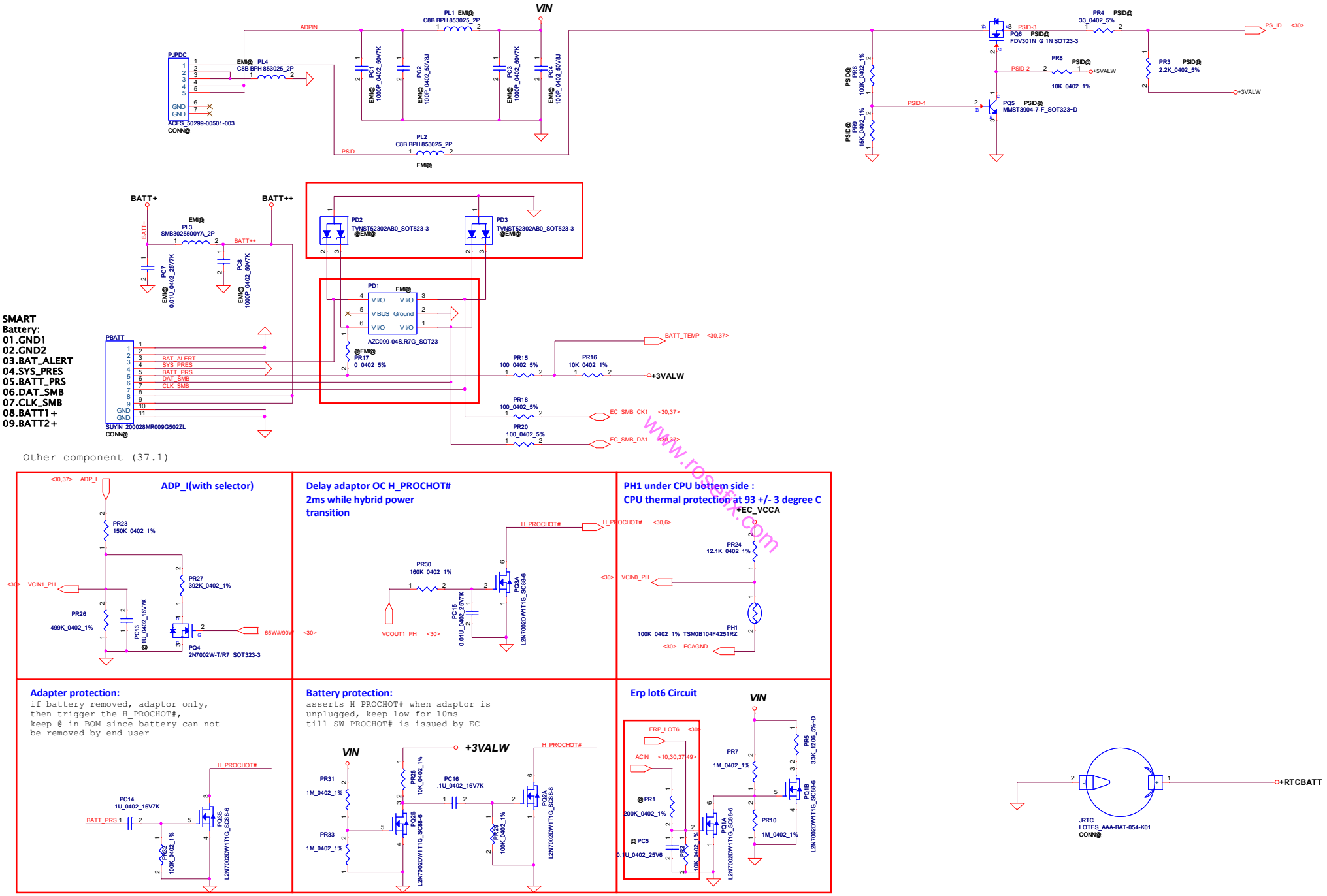

www.rosetex.com

www.vinafix.vn

Security Classification	Compal Secret Data		Compal Electronics, Inc.
Issued Date	2013/05/29	Deciphered Date 2014/06/01	Title: PWR_DCIN/BATT CONN/OTP
			Size: LA-9982P Document Number Rev 3.0
			Date: Wednesday, May 29, 2013 Sheet 36 of 57

THIS SHEET OF ENGINEERING DRAWING IS THE PROPRIETARY PROPERTY OF COMPAL ELECTRONICS, INC. AND CONTAINS CONFIDENTIAL AND TRADE SECRET INFORMATION. THIS SHEET MAY NOT BE TRANSFERED FROM THE CUSTODY OF THE COMPETENT DIVISION OF R&D DEPARTMENT EXCEPT AS AUTHORIZED BY COMPAL ELECTRONICS, INC. NEITHER THIS SHEET NOR THE INFORMATION IT CONTAINS MAY BE USED BY OR DISCLOSED TO ANY THIRD PARTY WITHOUT PRIOR WRITTEN CONSENT OF COMPAL ELECTRONICS, INC.

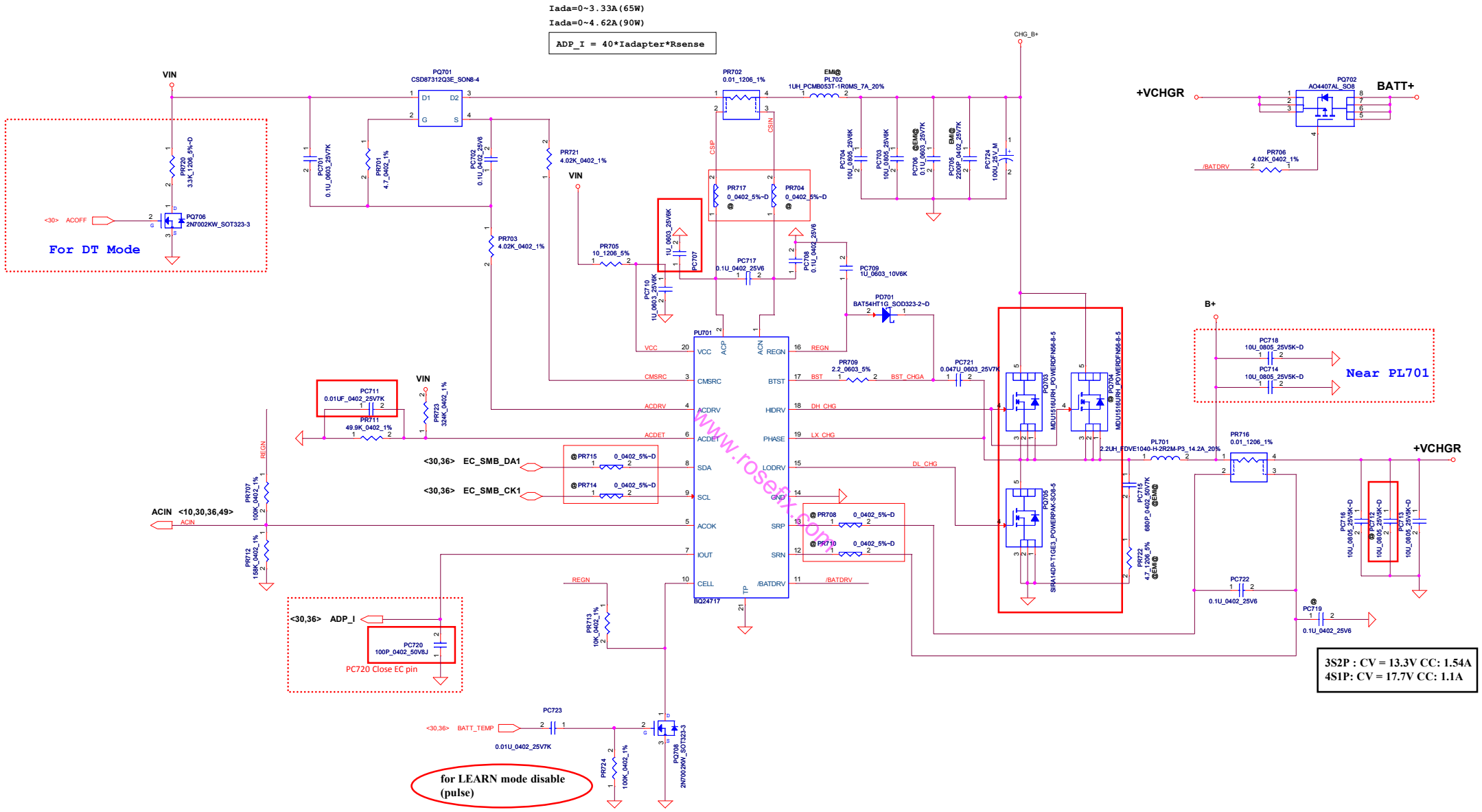

www.rosefx.com

www.vinafix.vn

Security Classification	Compal Secret Data		Compal Electronics, Inc.
Issued Date	2013/05/09	Deciphered Date 2014/06/01	Title: PWR_CHARGER
			Size: Document Number: LA-9982P Rev: 3.0
			Date: Wednesday, May 29, 2013 Sheet 37 of 57

THIS SHEET OF ENGINEERING DRAWING IS THE PROPRIETARY PROPERTY OF COMPAL ELECTRONICS, INC. AND CONTAINS CONFIDENTIAL AND TRADE SECRET INFORMATION. THIS SHEET MAY NOT BE TRANSFERED FROM THE CUSTODY OF THE COMPETENT DIVISION OF R&D EXCEPT AS AUTHORIZED BY COMPAL ELECTRONICS, INC. NEITHER THIS SHEET NOR THE INFORMATION IT CONTAINS MAY BE USED BY OR DISCLOSED TO ANY THIRD PARTY WITHOUT PRIOR WRITTEN CONSENT OF COMPAL ELECTRONICS, INC.

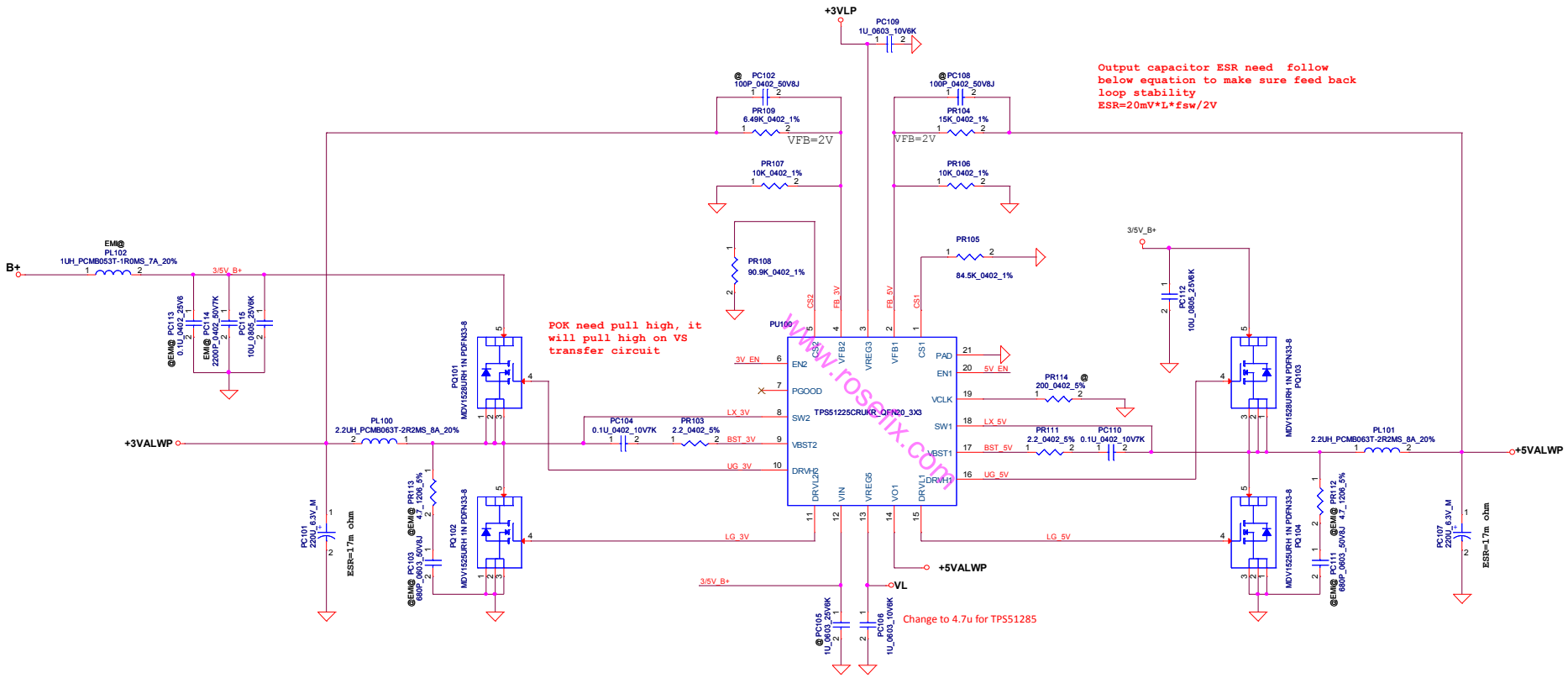

www.rosetix.com

3VALWP
TDC 5.95A
Peak Current 8.5A
OCP current 10.2A

	TYP	MAX
H/S Rds(on):	22mohm ,	30mohm
L/S Rds(on):	10.8mohm ,	13.6mohm

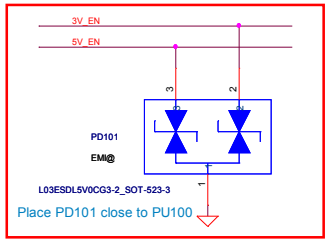

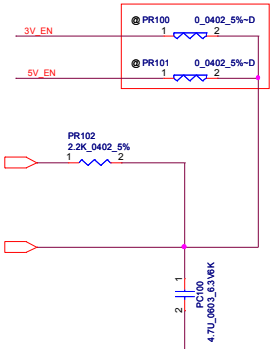

5VALWP
TDC 5.96A
Peak Current 8.51A
OCP current 10.2A

	TYP	MAX
H/S Rds(on):	22mohm ,	30mohm
L/S Rds(on):	10.8mohm ,	13.6mohm

www.vinafix.vn

Security Classification	Compal Secret Data		Compal Electronics, Inc.
Issued Date: 2013/05/29	Deciphered Date 2014/06/01		Title: PWR_3.3VALWP/5VALWP
			Size / Document Number: LA-9982P / Rev 3.0
			Date: Wednesday, May 29, 2013 / Sheet 38 of 57

THIS SHEET OF ENGINEERING DRAWING IS THE PROPRIETARY PROPERTY OF COMPAL ELECTRONICS, INC. AND CONTAINS CONFIDENTIAL AND TRADE SECRET INFORMATION. THIS SHEET MAY NOT BE TRANSFERED FROM THE CUSTODY OF THE COMPETENT DIVISION OF R&D DEPARTMENT EXCEPT AS AUTHORIZED BY COMPAL ELECTRONICS, INC. NEITHER THIS SHEET NOR THE INFORMATION IT CONTAINS MAY BE USED BY OR DISCLOSED TO ANY THIRD PARTY WITHOUT PRIOR WRITTEN CONSENT OF COMPAL ELECTRONICS, INC.

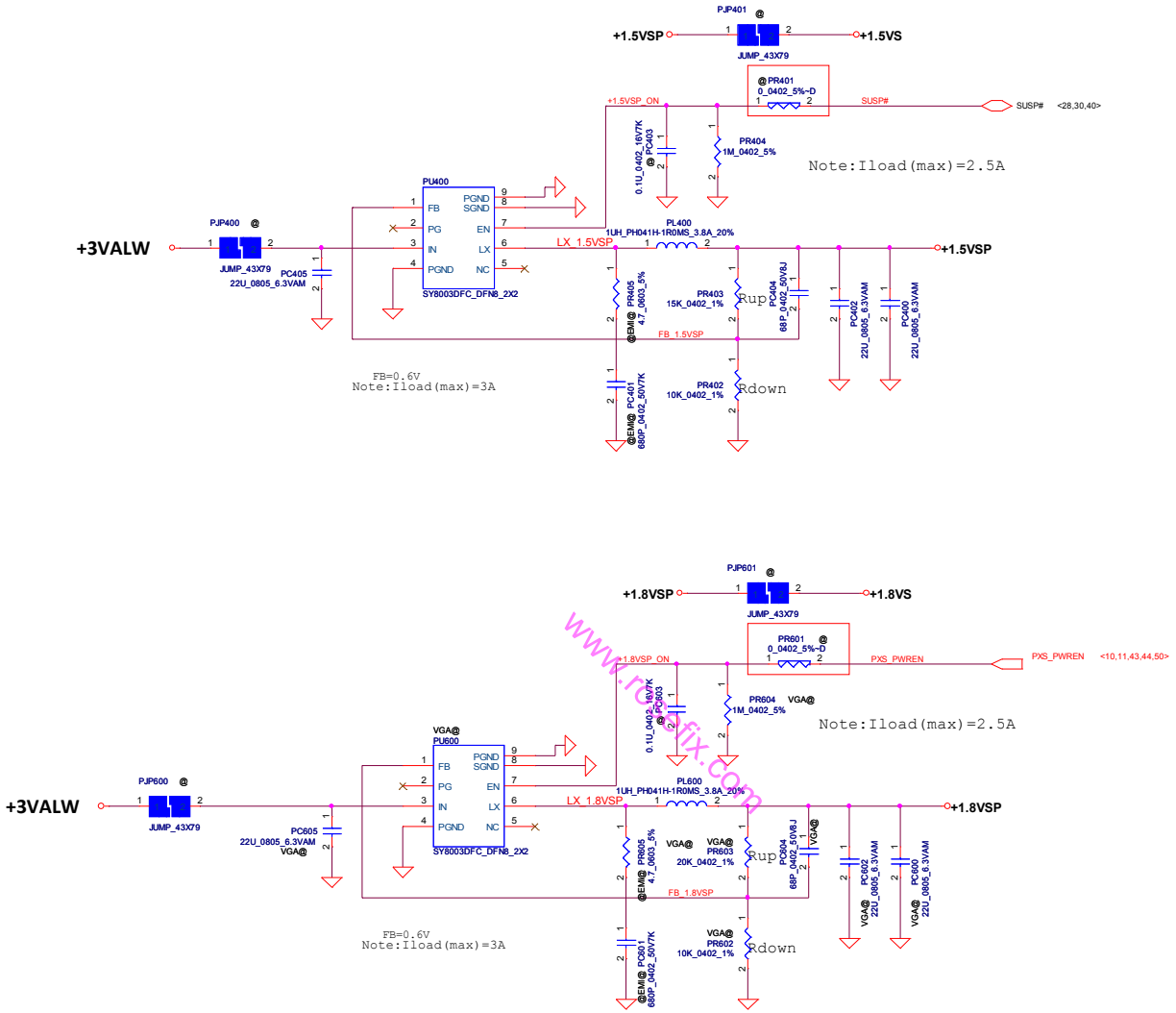

www.vinafix.com

www.vinafix.vn

Security Classification	Compal Secret Data		Compal Electronics, Inc.
Issued Date	2013/05/09	Deciphered Date 2014/06/01	Title: PWR_1.5VSP / 1.8VSP
			Size: Document Number: LA-9982P Rev 3.0
			Date: Wednesday, May 29, 2013 Sheet 39 of 57

THIS SHEET OF ENGINEERING DRAWING IS THE PROPRIETARY PROPERTY OF COMPAL ELECTRONICS, INC. AND CONTAINS CONFIDENTIAL AND TRADE SECRET INFORMATION. THIS SHEET MAY NOT BE TRANSFERED FROM THE CUSTODY OF THE COMPETENT DIVISION OF R&D EXCEPT AS AUTHORIZED BY COMPAL ELECTRONICS, INC. NEITHER THIS SHEET NOR THE INFORMATION IT CONTAINS MAY BE USED BY OR DISCLOSED TO ANY THIRD PARTY WITHOUT PRIOR WRITTEN CONSENT OF COMPAL ELECTRONICS, INC.

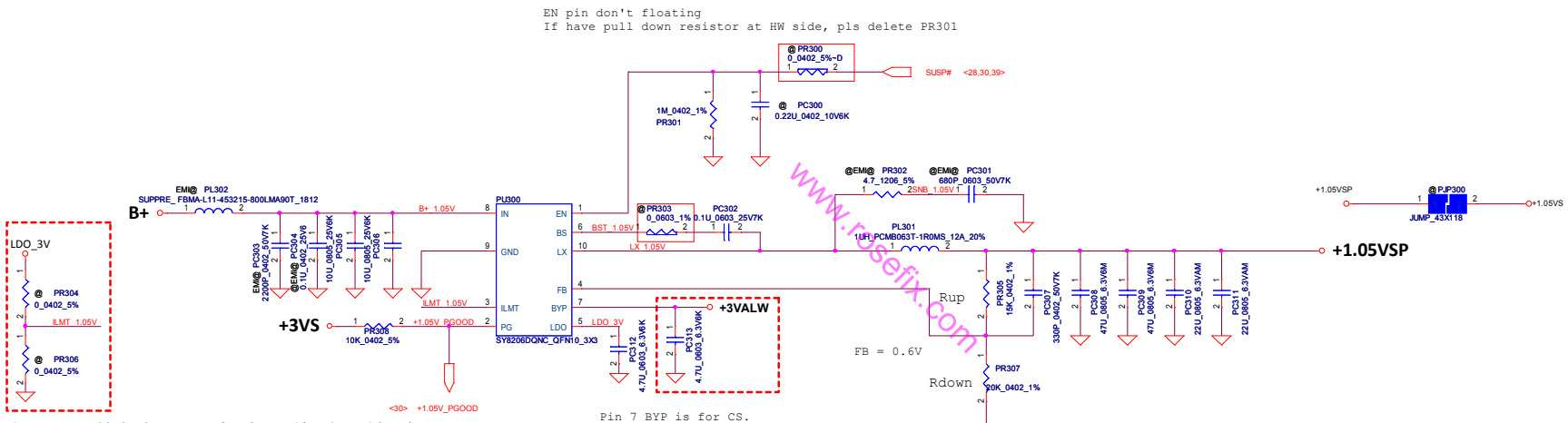

The current limit is set to 6A, 8A or 12A when this pin is pull low, floating or pull high

Pin 7 BYP is for CS.
Common NB can delete +3VALW and PC313

VFB=0.6V
Vout=0.6V* (1+Rup/Rdown)
Vout=1.05V

+1.05VSP
TDC 5A
Peak Current 6.6A
OCP current 8A

www.rosefix.com

Security Classification	Compal Secret Data			Compal Electronics, Inc.
Issued Date	2013/05/29	Deciphered Date	2014/06/01	Title: PWR_+VCCIO
				Size: C; Document Number: ; Rev: 3.0
				Date: Wednesday, May 29, 2013; Sheet 40 of 57

THIS SHEET OF ENGINEERING DRAWING IS THE PROPRIETARY PROPERTY OF COMPAL ELECTRONICS, INC. AND CONTAINS CONFIDENTIAL AND TRADE SECRET INFORMATION. THIS SHEET MAY NOT BE TRANSFERRED FROM THE CUSTODY OF THE COMPETENT DIVISION OF R&D DEPARTMENT EXCEPT AS AUTHORIZED BY COMPAL ELECTRONICS, INC., NEITHER THIS SHEET NOR THE INFORMATION IT CONTAINS MAY BE USED BY OR DISCLOSED TO ANY THIRD PARTY WITHOUT PRIOR WRITTEN CONSENT OF COMPAL ELECTRONICS, INC.

www.rosefix.com

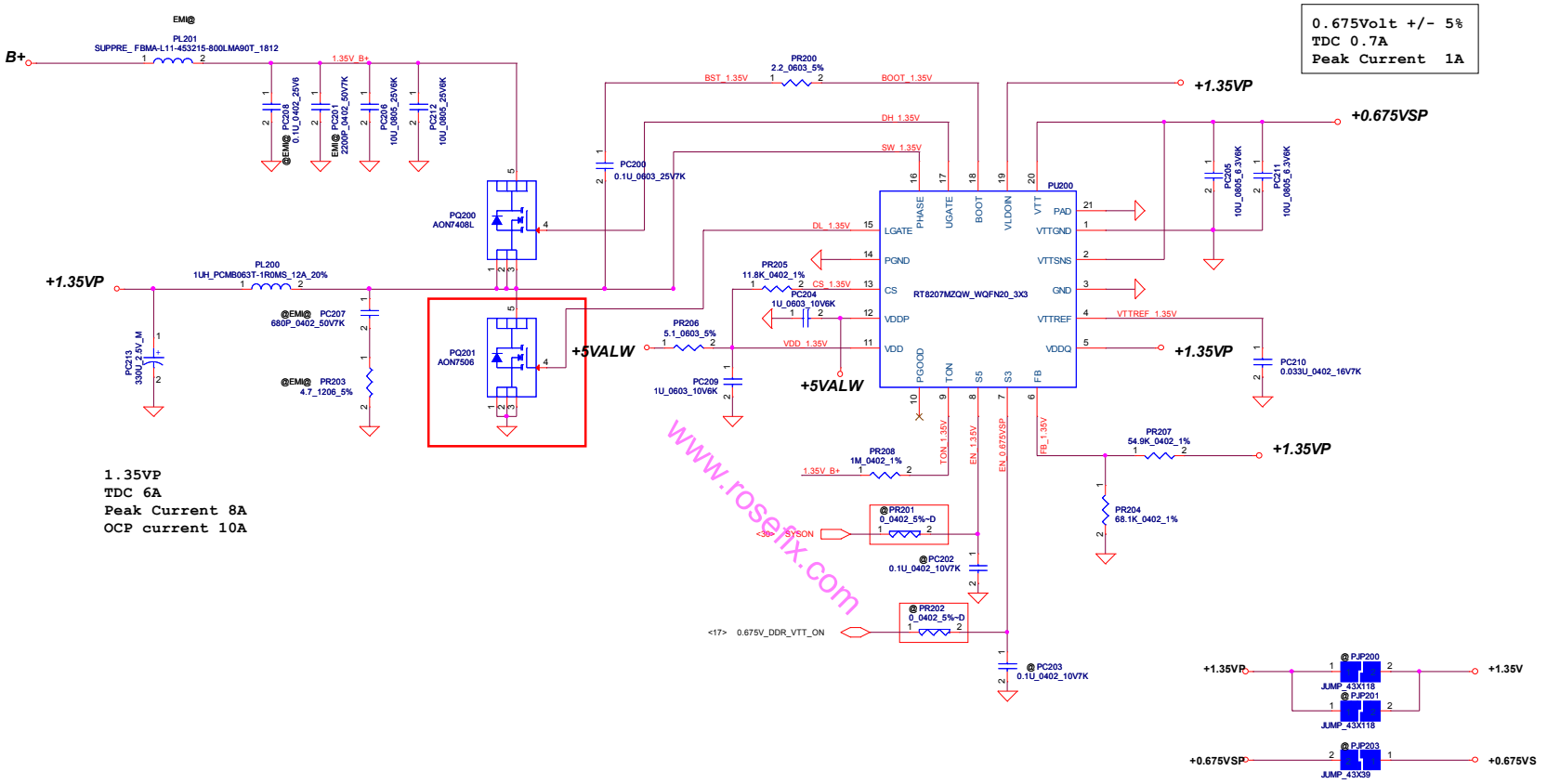

www.rosefix.com

www.vinafix.vn

Security Classification	Compal Secret Data		Compal Electronics, Inc.
Issued Date: 2013/05/29	Deciphered Date 2014/06/01		Title: PWR_+1.35VP/0.675VSP
			Size: Document Number: LA-9982P Rev: 3.0
			Date: Wednesday, May 29, 2013 Sheet 41 of 57

THIS SHEET OF ENGINEERING DRAWING IS THE PROPRIETARY PROPERTY OF COMPAL ELECTRONICS, INC. AND CONTAINS CONFIDENTIAL AND TRADE SECRET INFORMATION. THIS SHEET MAY NOT BE TRANSFERRED FROM THE CUSTODY OF THE COMPETENT DIVISION OF R&D DEPARTMENT EXCEPT AS AUTHORIZED BY COMPAL ELECTRONICS, INC. NEITHER THIS SHEET NOR THE INFORMATION IT CONTAINS MAY BE USED BY OR DISCLOSED TO ANY THIRD PARTY WITHOUT PRIOR WRITTEN CONSENT OF COMPAL ELECTRONICS, INC.

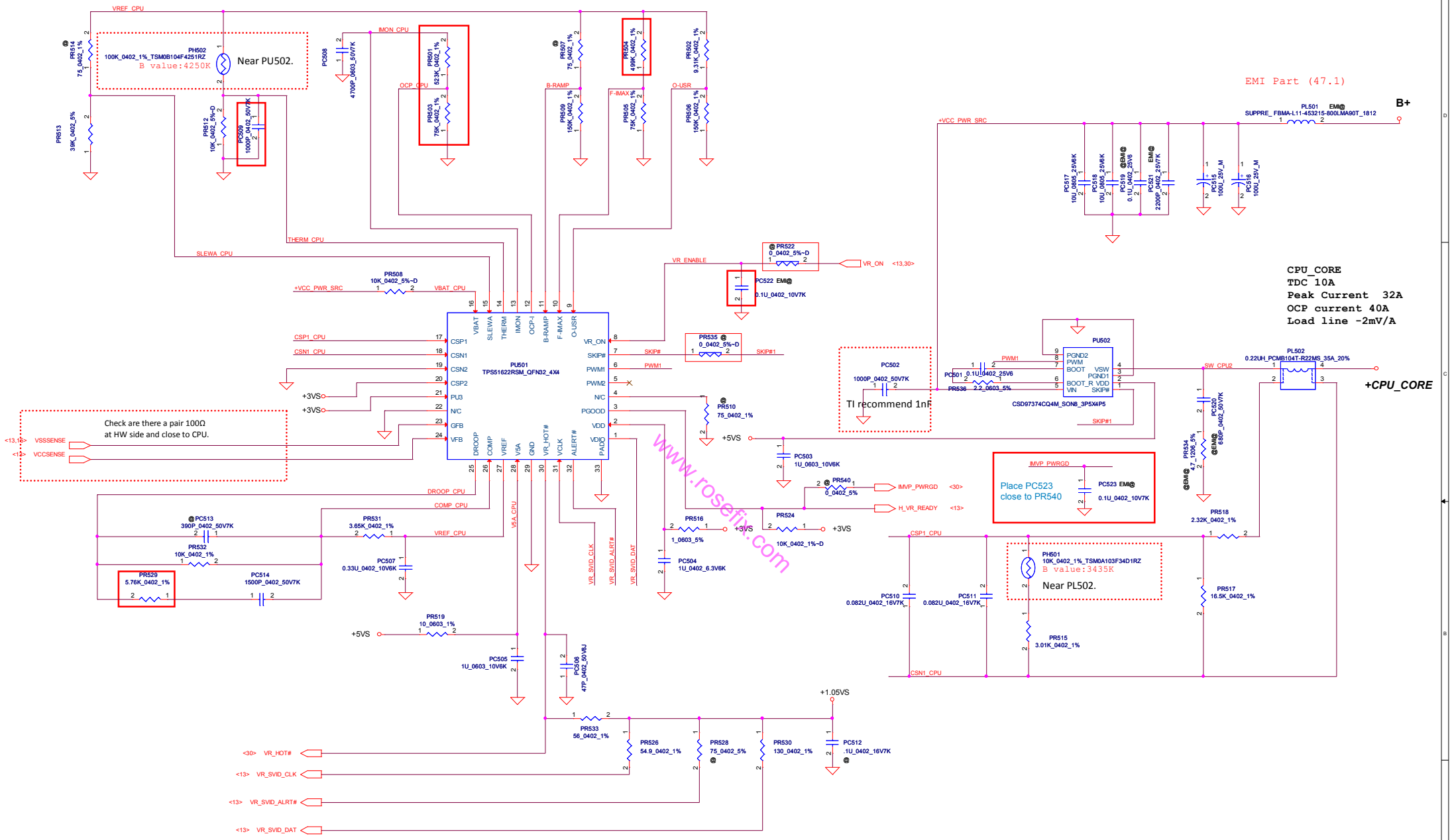
EMI Part (47.1)
B+
CPU_CORE
TDC 10A
Peak Current 32A
OCP current 40A
Load line -2mV/A
+CPU_CORE
PU501
TPS51622RSM_QFN32_4X4
PU502
CSD97374CQ4M_SON8_3P5X4P5
PL501 EMI@
SUPPRE_FBMA-L11-453215-800LMA90T_1812
PL502
0.22UH_PCMB104T-R22MS_35A_20%
PH502
100K_0402_1%_TSM0B104F4251RZ
B value:4250K
Near PU502.
PH501
10K_0402_1%_TSM0A103F34D1RZ
B value:3435K
Near PL502.
TI recommend 1nF
Place PC523 close to PR540
Check are there a pair 100Ω at HW side and close to CPU.
www.rosefix.com
www.vinafix.vn
Compal Electronics, Inc.
Compal Secret Data
Deciphered Date 2014/06/01
Issued Date 2013/05/29
Title PWR_VCORE
Size Document Number LA-9982P Rev 3.0
Date: Wednesday, May 29, 2013 Sheet 42 of 57

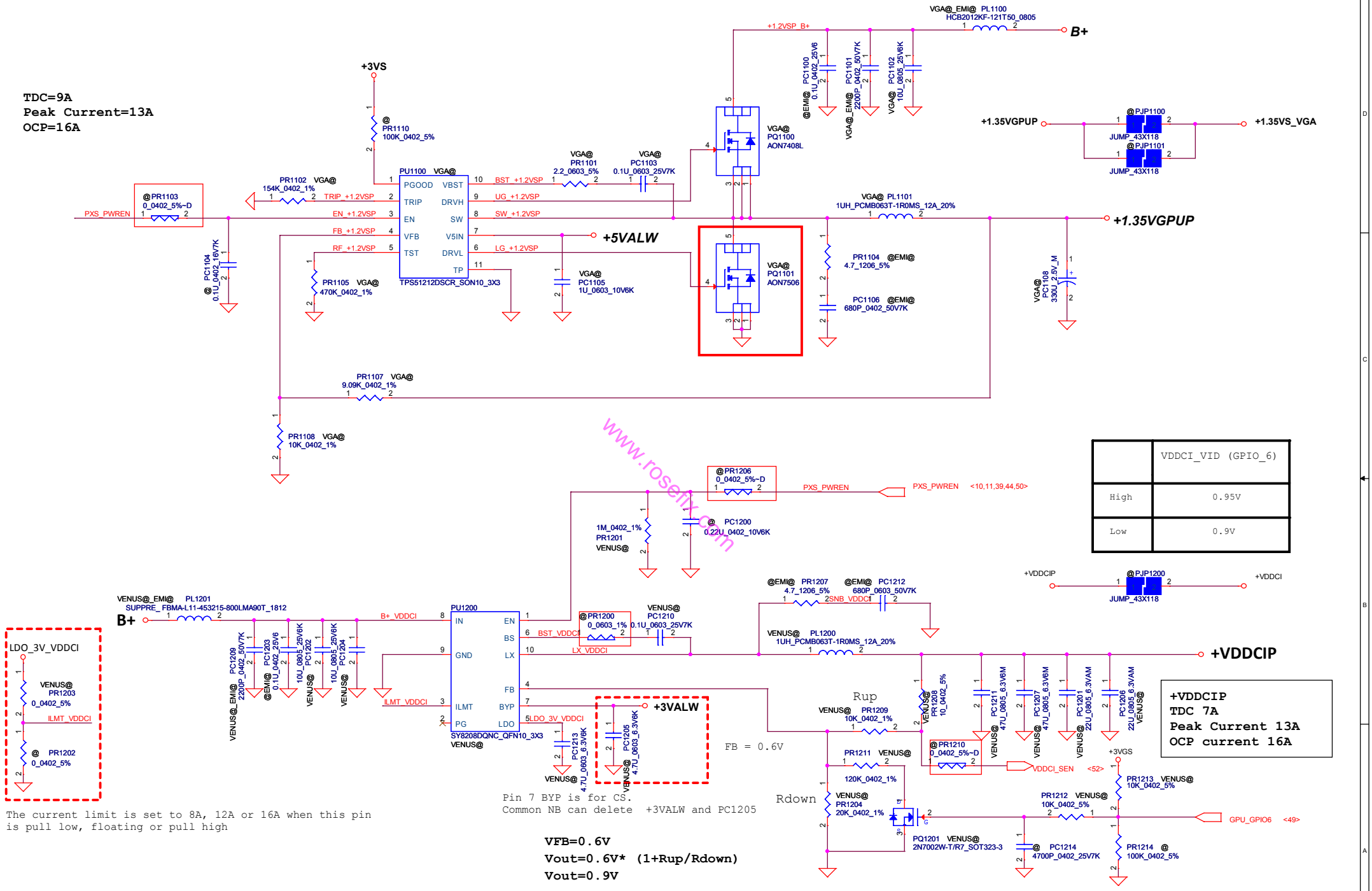

Security Classification	Compal Secret Data		
Issued Date	2013/05/29	Deciphered Date	2014/06/01

THIS SHEET OF ENGINEERING DRAWING IS THE PROPRIETARY PROPERTY OF COMPAL ELECTRONICS, INC. AND CONTAINS CONFIDENTIAL AND TRADE SECRET INFORMATION. THIS SHEET MAY NOT BE TRANSFERRED FROM THE CUSTODY OF THE COMPETENT DIVISION OF R&D DEPARTMENT EXCEPT AS AUTHORIZED BY COMPAL ELECTRONICS, INC. NEITHER THIS SHEET NOR THE INFORMATION IT CONTAINS MAY BE USED BY OR DISCLOSED TO ANY THIRD PARTY WITHOUT PRIOR WRITTEN CONSENT OF COMPAL ELECTRONICS, INC.

Compal Electronics, Inc.

Title: PWR +1.35VGPU/VDDCIP

Size | Document Number: LA-9982P | Rev 3.0

Date: Wednesday, May 29, 2013 | Sheet 43 of 57

www.vinafix.vn

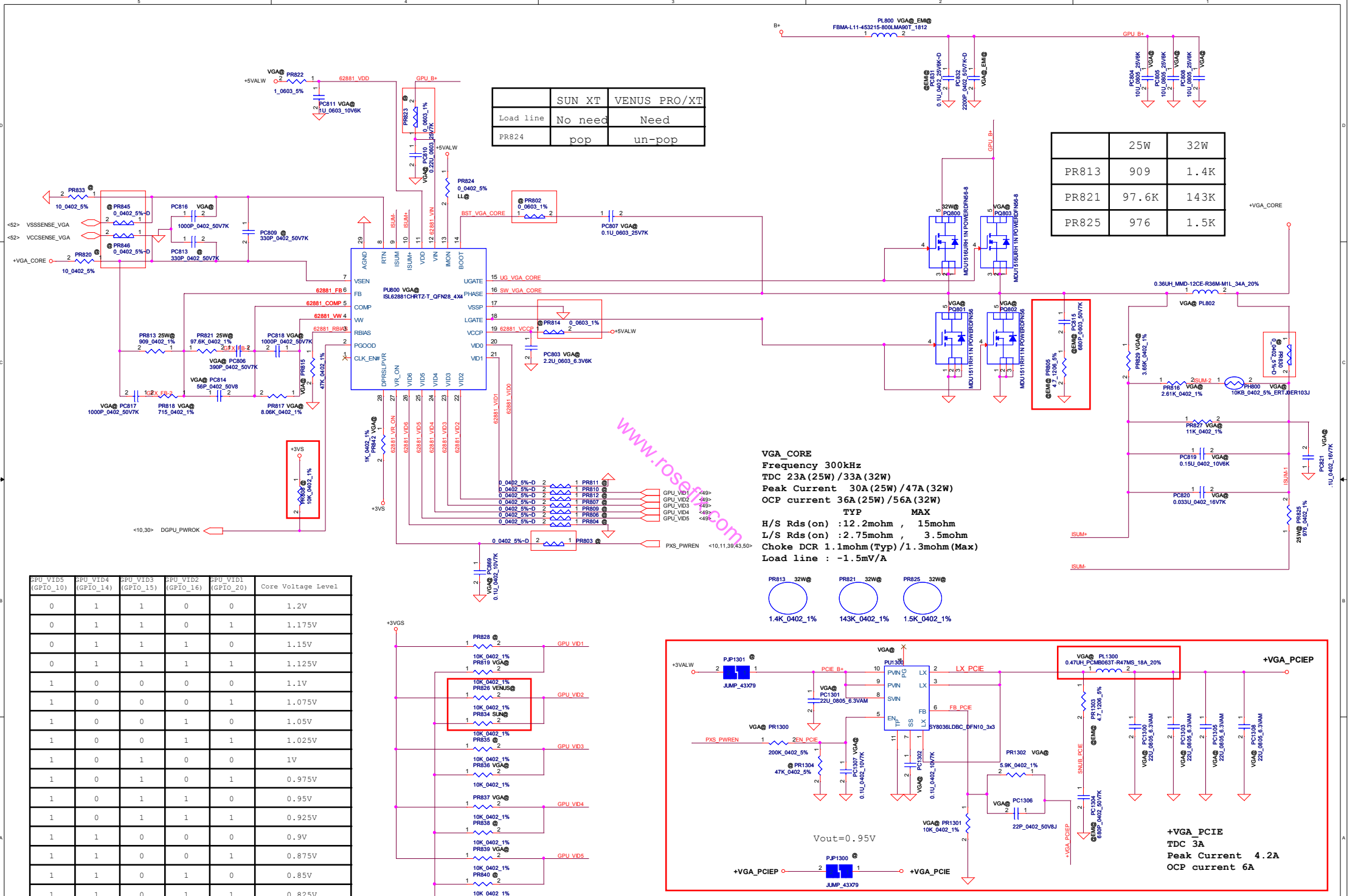

	SUN XT	VENUS PRO/XT
Load line	No need	Need
PR824	pop	un-pop

	25W	32W
PR813	909	1.4K
PR821	97.6K	143K
PR825	976	1.5K

GPU_VID5 (GPIO_10)	GPU_VID4 (GPIO_14)	GPU_VID3 (GPIO_15)	GPU_VID2 (GPIO_16)	GPU_VID1 (GPIO_20)	Core Voltage Level
0	1	1	0	0	1.2V
0	1	1	0	1	1.175V
0	1	1	1	0	1.15V
0	1	1	1	1	1.125V
1	0	0	0	0	1.1V
1	0	0	0	1	1.075V
1	0	0	1	0	1.05V
1	0	0	1	1	1.025V
1	0	1	0	0	1V
1	0	1	0	1	0.975V
1	0	1	1	0	0.95V
1	0	1	1	1	0.925V
1	1	0	0	0	0.9V
1	1	0	0	1	0.875V
1	1	0	1	0	0.85V
1	1	0	1	1	0.825V
1	1	1	0	0	0.8V
1	1	1	0	1	0.775V

Security Classification	Compal Secret Data		
Issued Date	2013/05/29	Deciphered Date	2014/06/01

THIS SHEET OF ENGINEERING DRAWING IS THE PROPRIETARY PROPERTY OF COMPAL ELECTRONICS, INC. AND CONTAINS CONFIDENTIAL AND TRADE SECRET INFORMATION. THIS SHEET MAY NOT BE TRANSFERRED FROM THE CUSTODY OF THE COMPETENT DIVISION OF R&D DEPARTMENT EXCEPT AS AUTHORIZED BY COMPAL ELECTRONICS, INC. NEITHER THIS SHEET NOR THE INFORMATION IT CONTAINS MAY BE USED BY OR DISCLOSED TO ANY THIRD PARTY WITHOUT PRIOR WRITTEN CONSENT OF COMPAL ELECTRONICS, INC.

Compal Electronics, Inc.

Title: PWR_VGA_CORE/PCIE

Size: | Document Number: LA-9982P | Rev: 3.0

Date: Wednesday, May 29, 2013 | Sheet 44 of 57

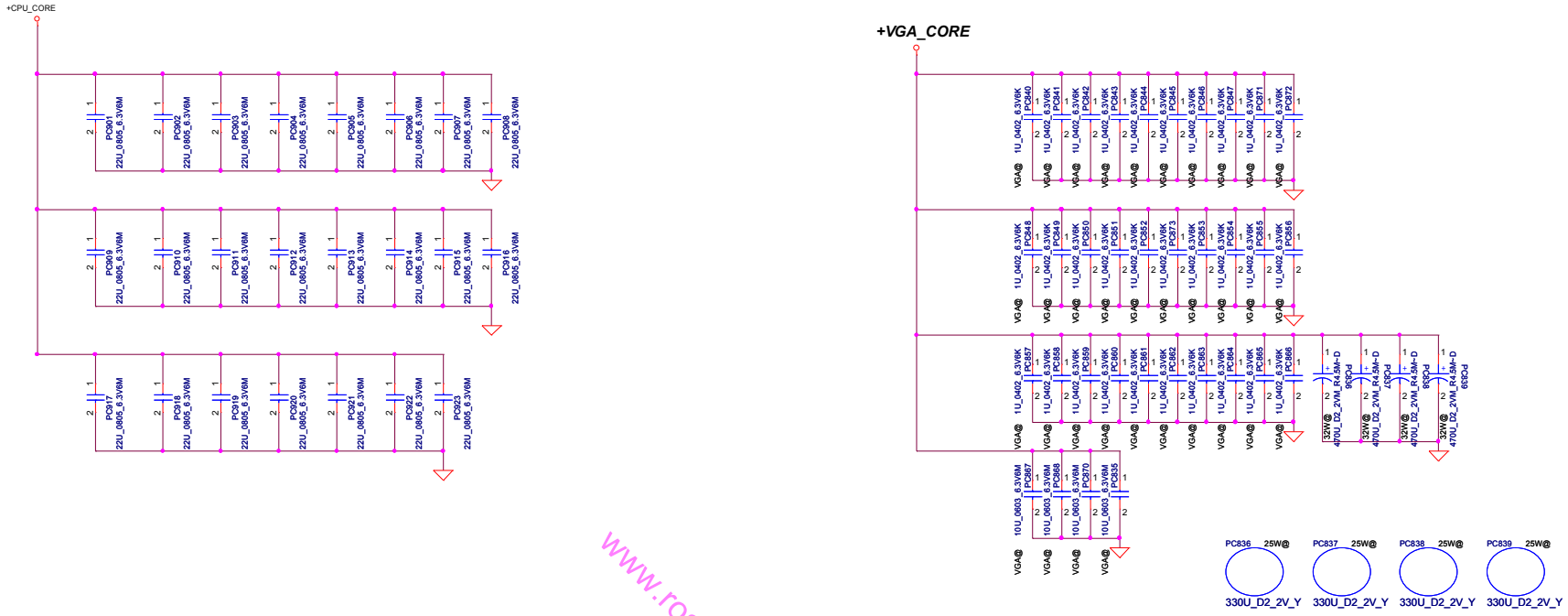

www.rosefix.com

www.vinafix.vn

Security Classification	Compal Secret Data		Compal Electronics, Inc.
Issued Date	2013/05/29	Deciphered Date	2014/06/01
Title	PWR_PROCESSOR DECOUPLING		
Size	Document Number: LA-9982P		Rev 3.0
Date: Wednesday, May 29, 2013	Sheet 45 of 57		

THIS SHEET OF ENGINEERING DRAWING IS THE PROPRIETARY PROPERTY OF COMPAL ELECTRONICS, INC. AND CONTAINS CONFIDENTIAL AND TRADE SECRET INFORMATION. THIS SHEET MAY NOT BE TRANSFERRED FROM THE CUSTODY OF THE COMPETENT DIVISION OF R&D DEPARTMENT EXCEPT AS AUTHORIZED BY COMPAL ELECTRONICS, INC. NEITHER THIS SHEET NOR THE INFORMATION IT CONTAINS MAY BE USED BY OR DISCLOSED TO ANY THIRD PARTY WITHOUT PRIOR WRITTEN CONSENT OF COMPAL ELECTRONICS, INC.

Power block

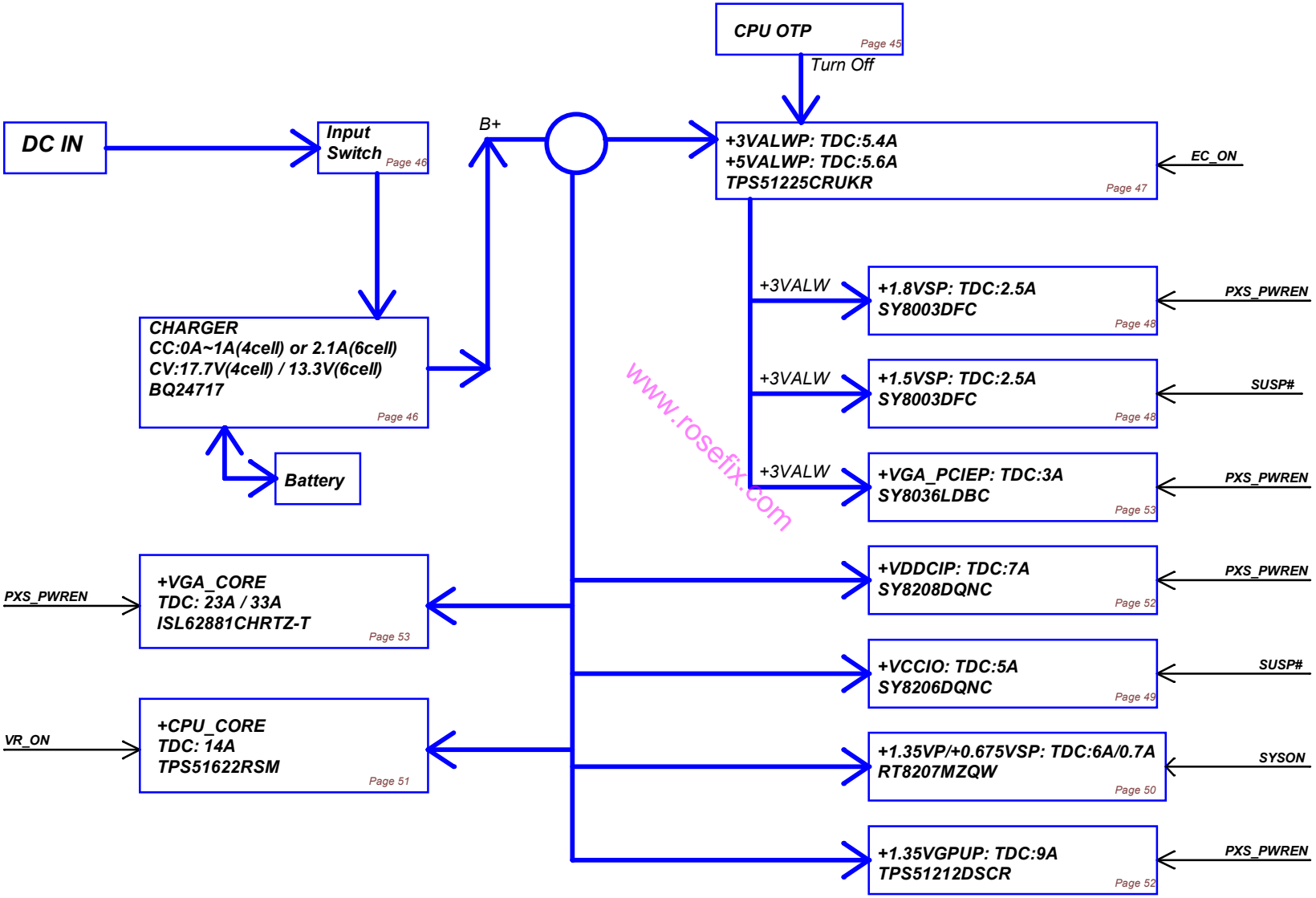

www.rosefix.com

www.vinafix.vn

Security Classification	Compal Secret Data		Compal Electronics, Inc.
Issued Date	2013/05/29	Deciphered Date	2014/06/01
Title	PWR_POWER BLOCK DIAGRAM		
Size	Document Number LA-9982P		Rev 3.0
Date: Wednesday, May 29, 2013	Sheet 46 of 57		

THIS SHEET OF ENGINEERING DRAWING IS THE PROPRIETARY PROPERTY OF COMPAL ELECTRONICS, INC. AND CONTAINS CONFIDENTIAL AND TRADE SECRET INFORMATION. THIS SHEET MAY NOT BE TRANSFERED FROM THE CUSTODY OF THE COMPETENT DIVISION OF R&D DEPARTMENT EXCEPT AS AUTHORIZED BY COMPAL ELECTRONICS, INC. NEITHER THIS SHEET NOR THE INFORMATION IT CONTAINS MAY BE USED BY OR DISCLOSED TO ANY THIRD PARTY WITHOUT PRIOR WRITTEN CONSENT OF COMPAL ELECTRONICS, INC.

Version Change List (P. I. R. List) Page 1

Item	Page#	Title	Date	Request Owner	Issue Description	Solution Description	Rev.
1	37	CHARGER	13/01/30	Morris	adjust design parameter from vendor recommend	delete PD702 change PC712 to unpop change PQ704 to unpop change PC707 from 0.1uF_0402 to 1uF_0603 change PC720 from 0.1uF to 100pF change PC711 from 1000pF to 0.01uF change PQ705 from SB00000SD00 to SB00000WY00	0.3
2	42	VCORE	13/01/30	Morris	adjust design parameter from vendor recommend	change PC509 from 0.1uF to 1000pF change PR529 from 3.83K to 5.76K change PR504 from 523K to 499K	0.3
3	36	DCIN/BATT CONN/OTP	13/01/30	Morris	change from ESD request	change PD1 from SC300002E00 to SC300001G00	0.3
4	38	3.3VALWP/5VALWP	13/02/01	Morris	add ESD diode from ESD request	add PD101(SCA00002A00)	0.3
5	42	VCORE	13/02/21	Morris	adjust design parameter from fine tune result	change PR501 from 422K to 523K change PR503 from 56K to 75K	0.3
6	44	VGA_CORE/PCIE	13/02/21	Morris	unpop from EE request	unpop PR808	0.3
7	44	VGA_CORE/PCIE	13/03/05	Morris	adjust output voltage from vender request	unpop PR826 and pop PR834 (only for Sun XT)	0.4
8	37 38 39 40 41 42	CHARGER 3.3VALWP/5VALWP 1.5VSP/1.8VSP +VCCIO +1.35VP/0.675VSP VCORE	13/03/28	Morris	verify function ok, so delete 0 ohm to short	unpop PR100,PR101,PR201,PR202,PR300,PR303,PR401,PR522,PR535, PR704,PR708,PR710,PR714,PR715,PR717	1.0
9	36	DCIN/BATT CONN/OTP	13/04/09	Morris	design change for solve issue	unpop PR1 and PC5	2.0
10	41 43	+1.35VP/0.675VSP +1.35VGPU/VDDCI	13/04/09	Morris	part shortage issue	change PQ201 and PQ1101 from SB00000T600 to SB000010A00	2.0
11	39 43 44	1.5VSP/1.8VSP +1.35VGPU/VDDCI VGA_CORE/PCIE	13/04/09	Morris	verify function ok, so delete 0 ohm to short	unpop PR601,PR802,PR803,PR814,PR823,PR830,PR845,PR846, PR1103,PR1200,PR1206,PR1210	2.0
12	43	+1.35VGPU/VDDCI	13/04/09	Morris	unpop VDDCI parts from vendor recommend and EEverify ok only for Sun XT	unpop PL1200,PL1201,PU1200,PQ1201,PR1201,PR1203,PR1204,PR1208,PR1209, PR1211,PR1212,PR1213,PC1201,PC1202,PC1204,PC1205,PC1206,PC1207, PC1209,PC1210,PC1211,PC1213 (only for Sun XT)	2.0
13	44	VGA_CORE/PCIE	13/04/12	Morris	part shortage issue	change PL1300 from SH00000GQ00 to SH00000PK00	2.0
14	36	DCIN/BATT CONN/OTP	13/04/12	Morris	customer request	add PR2 10Kohm	2.0
15	42	VCORE	13/04/15	Morris	EMI request	pop PC522 and add PC523 0.1uF	2.0
16	36	DCIN/BATT CONN/OTP	13/05/22	Morris	reserve parts from ESD request	reserve PD2,PD3,PR17 and unpop PR17	3.0

www.rosefix.com

www.vinafix.vn

THIS SHEET OF ENGINEERING DRAWING IS THE PROPRIETARY PROPERTY OF COMPAL ELECTRONICS, INC. AND CONTAINS CONFIDENTIAL AND TRADE SECRET INFORMATION. THIS SHEET MAY NOT BE TRANSFERED FROM THE CUSTODY OF THE COMPETENT DIVISION OF R&D DEPARTMENT EXCEPT AS AUTHORIZED BY COMPAL ELECTRONICS, INC. NEITHER THIS SHEET NOR THE INFORMATION IT CONTAINS MAY BE USED BY OR DISCLOSED TO ANY THIRD PARTY WITHOUT PRIOR WRITTEN CONSENT OF COMPAL ELECTRONICS, INC.

GFX PCIE LANE REVERSAL

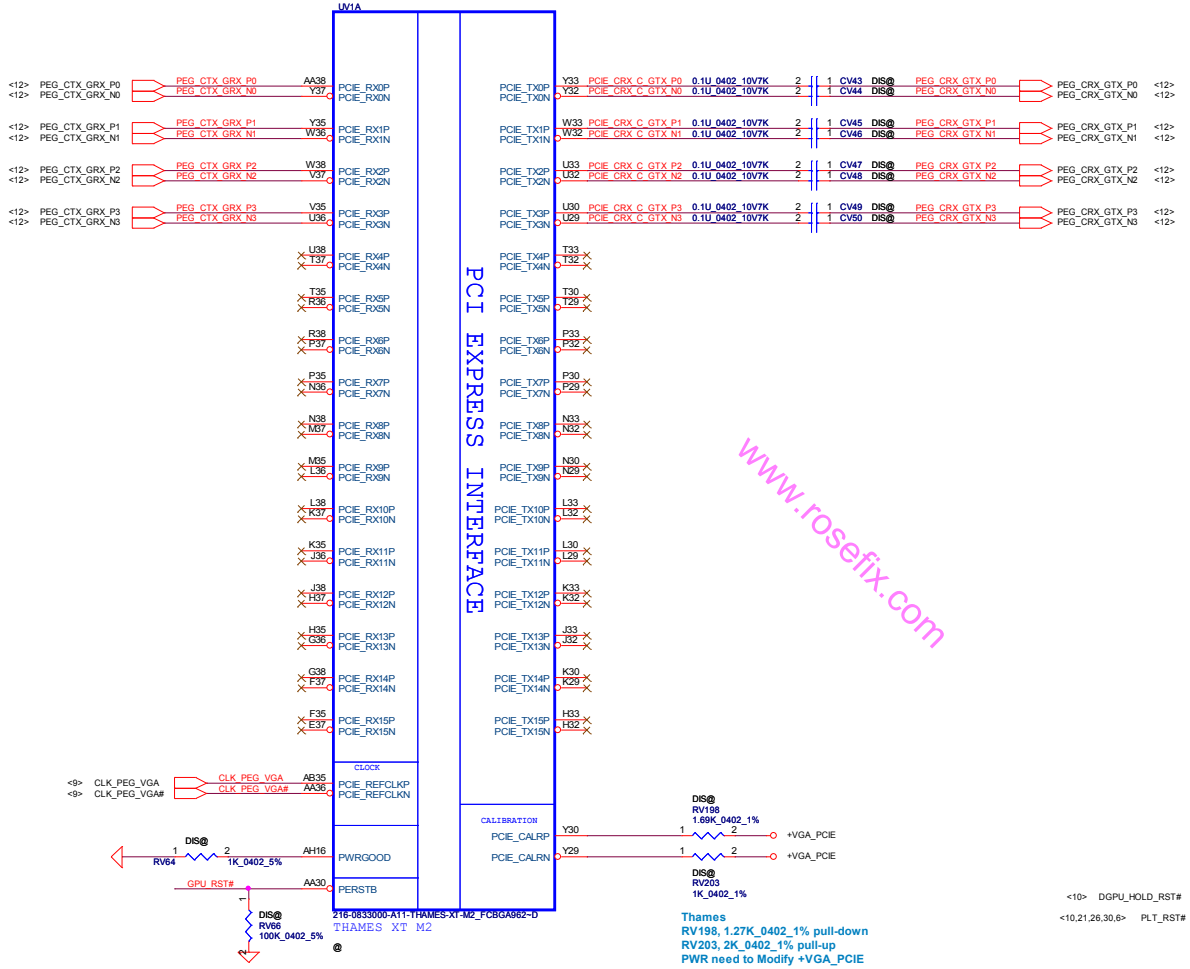

Thames
RV198, 1.27K_0402_1% pull-down
RV203, 2K_0402_1% pull-up
PWR need to Modify +VGA_PCIE

LVDS Interface

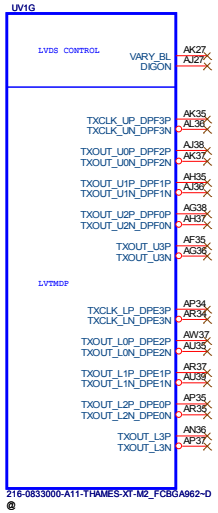

Place CV326 Close to UV13

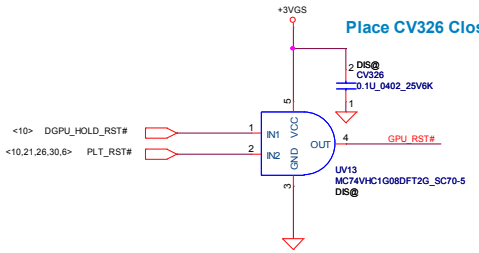

UV1 VENUSXT@

216-0846000 A1 VENUS XT M2 FCBGA 962P 0FD

SA00006KW0L

UV1 VENUSPRO@

216-0846009 A1 VENUS PRO M2 FCBGA 962P 0FD

SA00006MW0L

www.rosefix.com

www.vinafix.vn

Security Classification	Compal Secret Data		Compal Electronics, Inc.
Issued Date	2013/05/29	Deciphered Date 2014/06/01	Title: ATI_Venus Pro_M2_PCIE/LVDS
			Size: Document Number: LA-9982P — Rev: 3.0
			Date: Wednesday, May 29, 2013 — Sheet 48 of 57

THIS SHEET OF ENGINEERING DRAWING IS THE PROPRIETARY PROPERTY OF COMPAL ELECTRONICS, INC. AND CONTAINS CONFIDENTIAL AND TRADE SECRET INFORMATION. THIS SHEET MAY NOT BE TRANSFERED FROM THE CUSTODY OF THE COMPETENT DIVISION OF R&D DEPARTMENT EXCEPT AS AUTHORIZED BY COMPAL ELECTRONICS, INC. NEITHER THIS SHEET NOR THE INFORMATION IT CONTAINS MAY BE USED BY OR DISCLOSED TO ANY THIRD PARTY WITHOUT PRIOR WRITTEN CONSENT OF COMPAL ELECTRONICS, INC.

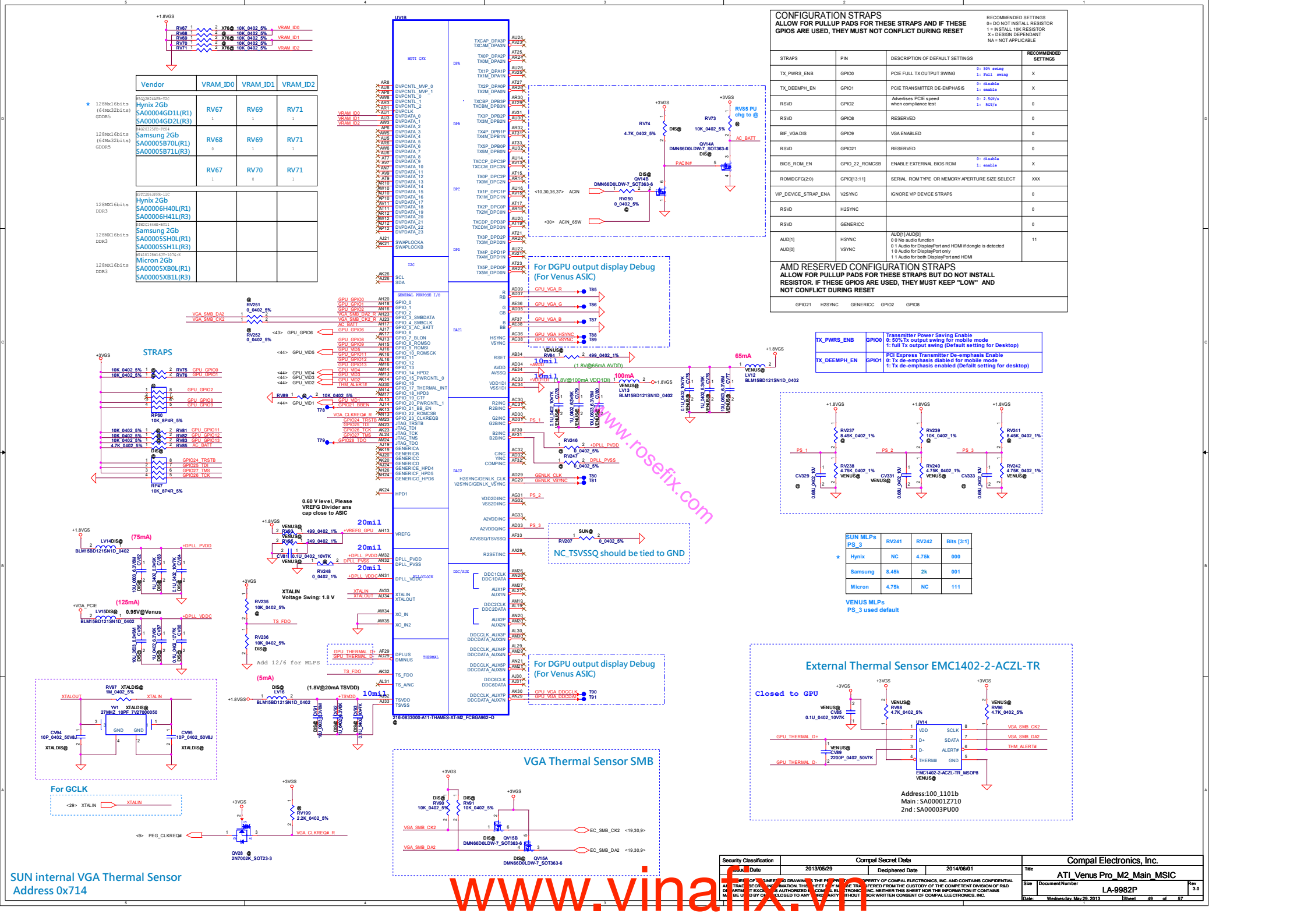
CONFIGURATION STRAPS
ALLOW FOR PULLUP PADS FOR THESE STRAPS AND IF THESE GPIOS ARE USED, THEY MUST NOT CONFLICT DURING RESET
RECOMMENDED SETTINGS
0= DO NOT INSTALL RESISTOR
1 = INSTALL 10K RESISTOR
X = DESIGN DEPENDANT
NA = NOT APPLICABLE
STRAPS | PIN | DESCRIPTION OF DEFAULT SETTINGS | RECOMMENDED SETTINGS
TX_PWRS_ENB | GPIO0 | PCIE FULL TX OUTPUT SWING 0: 50% swing 1: Full swing | X
TX_DEEMPH_EN | GPIO1 | PCIE TRANSMITTER DE-EMPHASIS 0: disable 1: enable | X
RSVD | GPIO2 | Advertises PCIE speed when compliance test 0: 2.5GT/s 1: 5GT/s | 0
RSVD | GPIO8 | RESERVED | 0
BIF_VGA DIS | GPIO9 | VGA ENABLED | 0
RSVD | GPIO21 | RESERVED | 0
BIOS_ROM_EN | GPIO_22_ROMCSB | ENABLE EXTERNAL BIOS ROM 0: disable 1: enable | X
ROMIDCFG(2:0) | GPIO(13:11) | SERIAL ROM TYPE OR MEMORY APERTURE SIZE SELECT | XXX
VIP_DEVICE_STRAP_ENA | V2SYNC | IGNORE VIP DEVICE STRAPS | 0
RSVD | H2SYNC | | 0
RSVD | GENERICC | | 0
AUD[1] AUD[0] | HSYNC VSYNC | AUD[1] AUD[0] 0 0 No audio function 0 1 Audio for DisplayPort and HDMI if dongle is detected 1 0 Audio for DisplayPort only 1 1 Audio for both DisplayPort and HDMI | 11
AMD RESERVED CONFIGURATION STRAPS
ALLOW FOR PULLUP PADS FOR THESE STRAPS BUT DO NOT INSTALL RESISTOR. IF THESE GPIOS ARE USED, THEY MUST KEEP "LOW" AND NOT CONFLICT DURING RESET
GPIO21 H2SYNC GENERICC GPIO2 GPIO8
TX_PWRS_ENB GPIO0 Transmitter Power Saving Enable 0: 50% Tx output swing for mobile mode 1: full Tx output swing (Default setting for Desktop)
TX_DEEMPH_EN GPIO1 PCI Express Transmitter De-emphasis Enable 0: Tx de-emphasis diabled for mobile mode 1: Tx de-emphasis enabled (Defailt setting for desktop)
Vendor | VRAM_ID0 | VRAM_ID1 | VRAM_ID2
128Mx16bits (64Mx32bits) GDDR5
Hynix 2Gb SA00004GD1L(R1) SA00004GD2L(R3) | RV67 | RV69 | RV71
Samsung 2Gb SA00005B70L(R1) SA00005B71L(R3) | RV68 | RV69 | RV71
RV67 | RV70 | RV71
128MX16bits DDR3
Hynix 2Gb SA00006H40L(R1) SA00006H41L(R3)
128MX16bits DDR3
Samsung 2Gb SA00005SH0L(R1) SA00005SH1L(R3)
128MX16bits DDR3
Micron 2Gb SA00005XB0L(R1) SA00005XB1L(R3)
STRAPS
For DGPU output display Debug (For Venus ASIC)
NC_TSVSSQ should be tied to GND
0.60 V level, Please VREFG Divider ans cap close to ASIC
XTALIN Voltage Swing: 1.8 V
Add 12/6 for MLPS
For GCLK
SUN internal VGA Thermal Sensor Address 0x714
VGA Thermal Sensor SMB
External Thermal Sensor EMC1402-2-ACZL-TR
Closed to GPU
Address:100_1101b
Main : SA00001Z710
2nd : SA00003PU00
SUN MLPs PS_3 | RV241 | RV242 | Bits [3:1]
Hynix | NC | 4.75k | 000
Samsung | 8.45k | 2k | 001
Micron | 4.75k | NC | 111
VENUS MLPs PS_3 used default
Compal Electronics, Inc.
ATI_Venus Pro_M2_Main_MSIC
LA-9982P
Rev 3.0
Wednesday, May 29, 2013
Sheet 49 of 57
www.rosefix.com
www.vinafix.vn

PX_MODE=1 for Normal Operation
PX_MODE=0 for BACO mode to shut down power rails expcept VDDR3,PCIE_VDDC and 1.8V rail

Note:

PX4.0 +VGA_CORE,VDDCI,+1.5VGS ON
PX4.0 +3VGS, +1.0VGS,+1.8VGS OFF
PX5.0 +3VGS,+VGA_CORE,VDDCI,+1.5VGV,+1.0VGS,+1.8VGS OFF

Switch circuits in BACO desingns for Thames/Seymour only 55mA@1.0V, in BACO mode

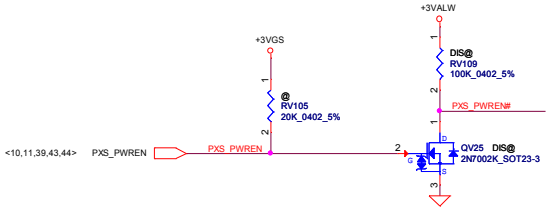

for PX4.0 and PX5.0

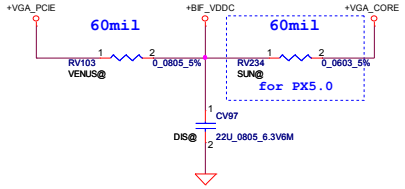

www.rosefix.com

+1.8VS TO +1.8VGS

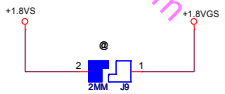

SHORT DEFAULT

+3VS TO +3VGS

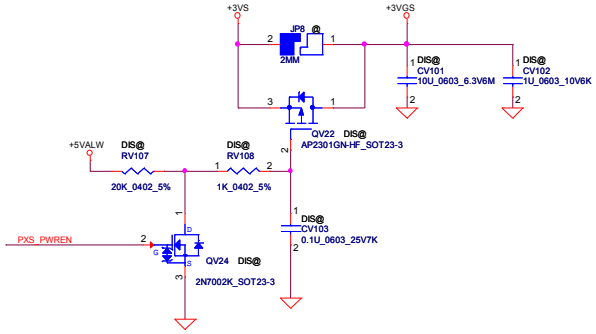

Power seguence of Sun XT,Venus Pro,Venus XT

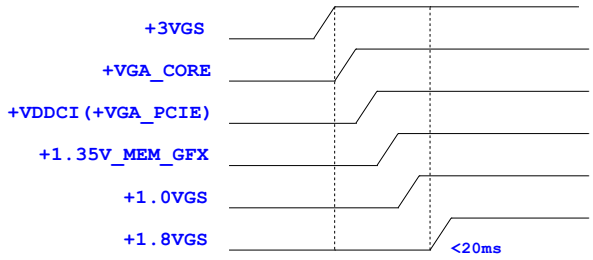

+1.35VS_VGA TO +1.35V_MEM_GFX

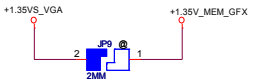

SHORT DEFAULT

Security Classification	Compal Secret Data		Compal Electronics, Inc.
Issued Date	2013/05/29	Deciphered Date 2014/06/01	Title: ATI_Venus Pro_M2_BACO POWER
			Size / Document Number: LA-9982P — Rev 3.0
			Date: Wednesday, May 29, 2013 — Sheet 50 of 57

THIS SHEET OF ENGINEERING DRAWING IS THE PROPRIETARY PROPERTY OF COMPAL ELECTRONICS, INC. AND CONTAINS CONFIDENTIAL AND TRADE SECRET INFORMATION. THIS SHEET MAY NOT BE TRANSFERRED FROM THE CUSTODY OF THE COMPETENT DIVISION OF R&D DEPARTMENT EXCEPT AS AUTHORIZED BY COMPAL ELECTRONICS, INC. NEITHER THIS SHEET NOR THE INFORMATION IT CONTAINS MAY BE USED BY OR DISCLOSED TO ANY THIRD PARTY WITHOUT PRIOR WRITTEN CONSENT OF COMPAL ELECTRONICS, INC.

www.vinafix.vn

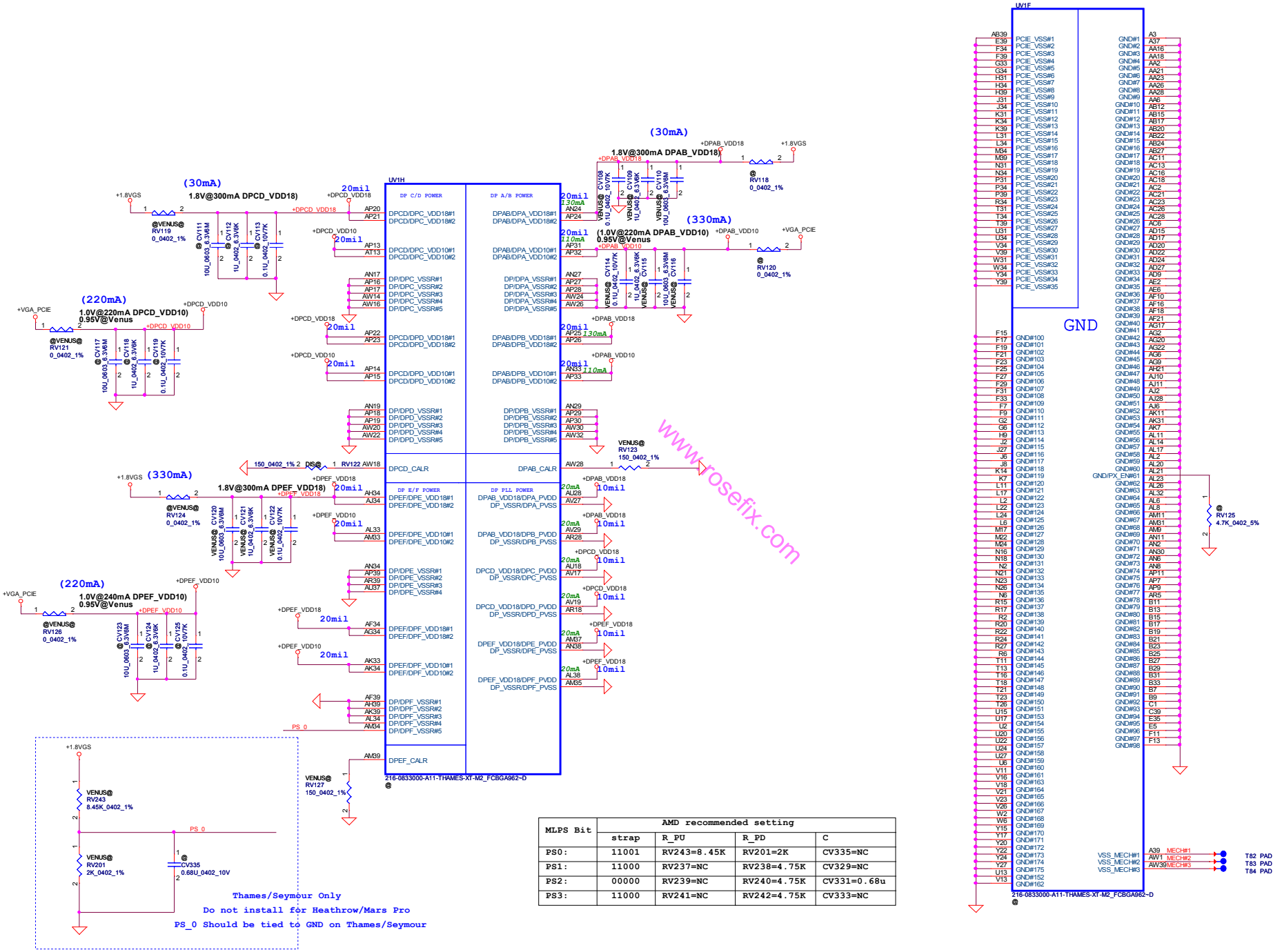

MLPS Bit	AMD recommended setting			
	strap	R_PU	R_PD	C
PS0:	11001	RV243=8.45K	RV201=2K	CV335=NC
PS1:	11000	RV237=NC	RV238=4.75K	CV329=NC
PS2:	00000	RV239=NC	RV240=4.75K	CV331=0.68u
PS3:	11000	RV241=NC	RV242=4.75K	CV333=NC

www.rosefix.com
www.vinafix.vn

Security Classification	Compal Secret Data		
Issued Date	2013/05/29	Deciphered Date	2014/06/01

THIS SHEET OF ENGINEERING DRAWING IS THE PROPRIETARY PROPERTY OF COMPAL ELECTRONICS, INC. AND CONTAINS CONFIDENTIAL AND TRADE SECRET INFORMATION. THIS SHEET MAY NOT BE TRANSFERED FROM THE CUSTODY OF THE COMPETENT DIVISION OF R&D DEPARTMENT EXCEPT AS AUTHORIZED BY COMPAL ELECTRONICS, INC. NEITHER THIS SHEET NOR THE INFORMATION IT CONTAINS MAY BE USED BY OR DISCLOSED TO ANY THIRD PARTY WITHOUT PRIOR WRITTEN CONSENT OF COMPAL ELECTRONICS, INC.

Compal Electronics, Inc.

Title: ATI_Venus Pro_M2_PWR_GND

Size: | Document Number: LA-9982P | Rev: 3.0

Date: Wednesday, May 29, 2013 | Sheet 51 of 57

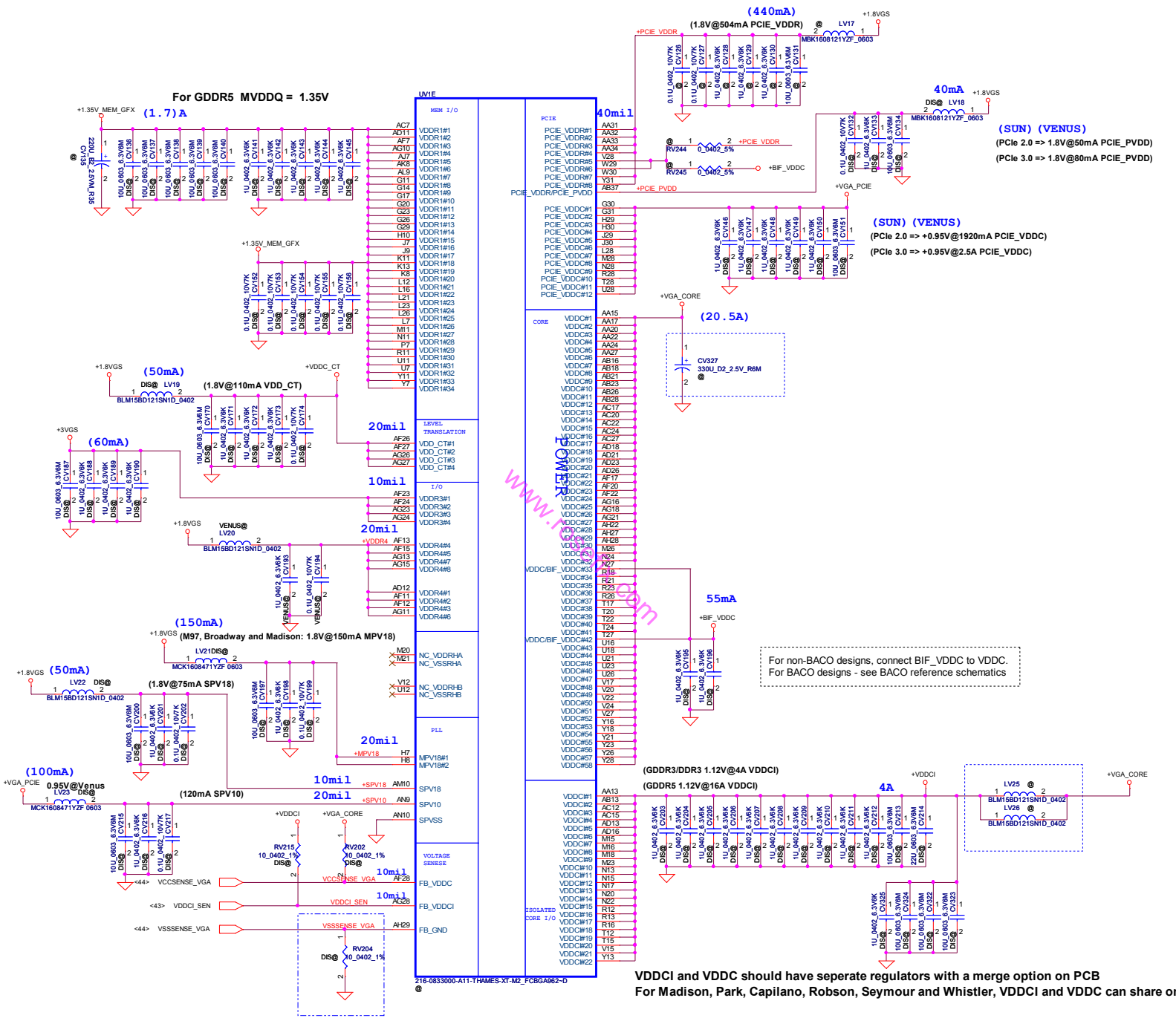

Security Classification	Compal Secret Data			Compal Electronics, Inc.
Issued Date	2013/05/29	Deciphered Date	2014/06/01	Title: ATI_Venus Pro_M2_Power
				Size: Document Number: LA-9982P Rev: 3.0
				Date: Wednesday, May 29, 2013 Sheet 52 of 57

THIS SHEET OF ENGINEERING DRAWING IS THE PROPRIETARY PROPERTY OF COMPAL ELECTRONICS, INC. AND CONTAINS CONFIDENTIAL AND TRADE SECRET INFORMATION. THIS SHEET MAY NOT BE TRANSFERRED FROM THE CUSTODY OF THE COMPETENT DIVISION OF R&D DEPARTMENT EXCEPT AS AUTHORIZED BY COMPAL ELECTRONICS, INC. NEITHER THIS SHEET NOR THE INFORMATION IT CONTAINS MAY BE USED BY OR DISCLOSED TO ANY THIRD PARTY WITHOUT PRIOR WRITTEN CONSENT OF COMPAL ELECTRONICS, INC.

www.vinafix.vn

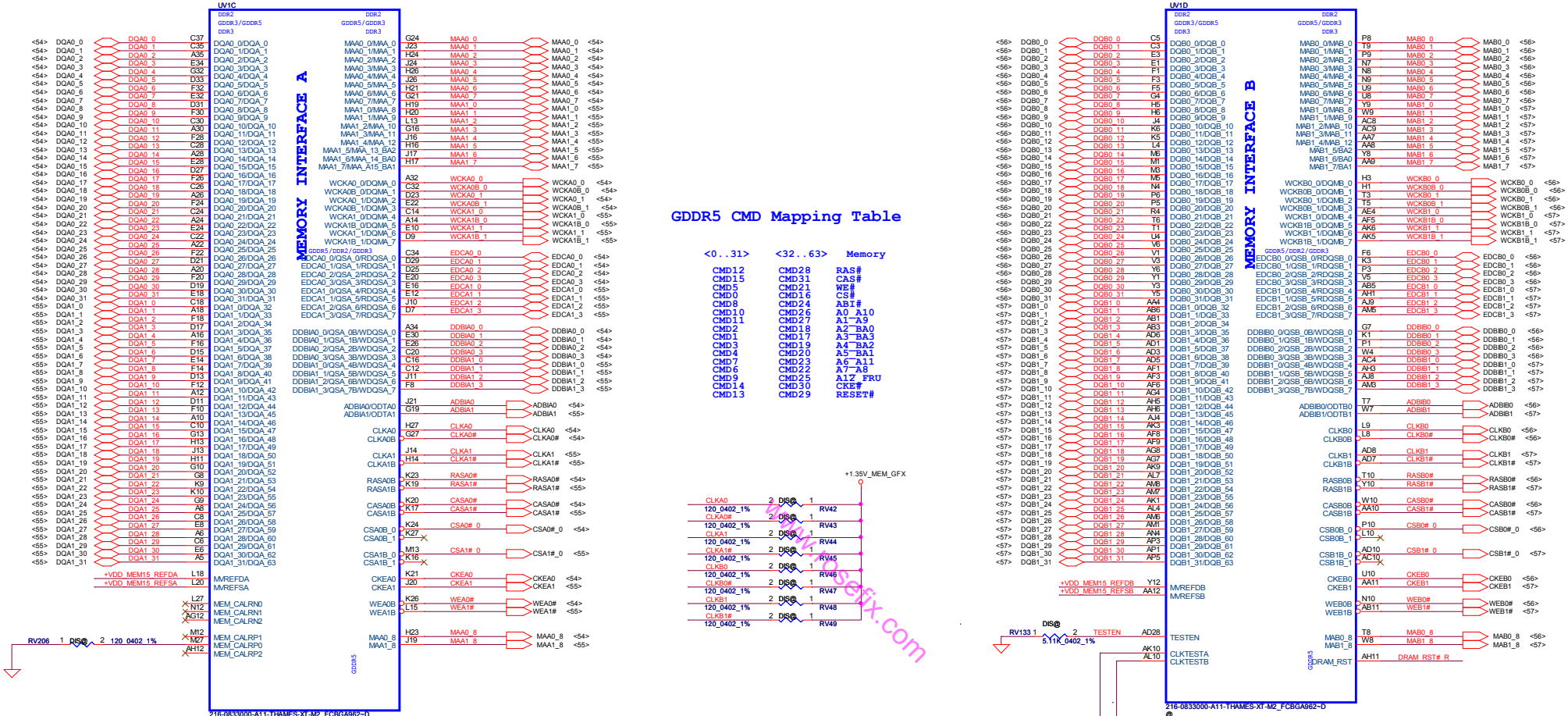

GDDR5 CMD Mapping Table

<0..31>	<32..63>	Memory
CMD12	CMD28	RAS#
CMD15	CMD31	CAS#
CMD5	CMD21	WE#
CMD0	CMD16	CS#
CMD8	CMD24	ABI#
CMD10	CMD26	A0_A10
CMD11	CMD27	A1~A9
CMD2	CMD18	A2~BA0
CMD1	CMD17	A3~BA3
CMD3	CMD19	A4~BA2
CMD4	CMD20	A5~BA1
CMD7	CMD23	A6~A11
CMD6	CMD22	A7~A8
CMD9	CMD25	A1Z FRU
CMD14	CMD30	CKE#
CMD13	CMD29	RESET#

This basic topology should be used for DRAM_RST for DDR3/GDDR5.These Capacitors and Resistor values are an example only. The Series R and || Cap values will depend on the DRAM load and will have to be calculated for different Memory ,DRAM Load and board to pass Reset Signal Spec.
Place all these components very close to GPU (Within 25mm) and keep all component close to each Other (within 5mm) except Rser2

route 50ohms single-ended/100ohms diff and keep short
Debug only, for clock observation, if not needed, DNI 5mil 5mil

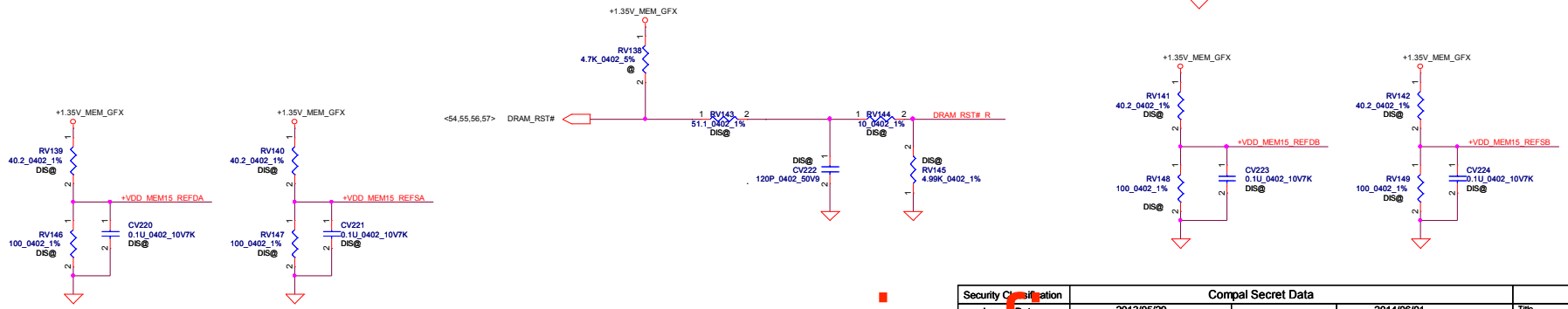

www.vinafix.com
www.vinafix.vn

Security Classification	Compal Secret Data		
Issued Date	2013/05/29	Deciphered Date	2014/06/01

THIS SHEET OF ENGINEERING DRAWING IS THE PROPRIETARY PROPERTY OF COMPAL ELECTRONICS, INC. AND CONTAINS CONFIDENTIAL AND TRADE SECRET INFORMATION. THIS SHEET MAY NOT BE TRANSFERED FROM THE CUSTODY OF THE COMPETENT DIVISION OF R&D DEPARTMENT EXCEPT AS AUTHORIZED BY COMPAL ELECTRONICS, INC. NEITHER THIS SHEET NOR THE INFORMATION IT CONTAINS MAY BE USED BY OR DISCLOSED TO ANY THIRD PARTY WITHOUT PRIOR WRITTEN CONSENT OF COMPAL ELECTRONICS, INC.

Compal Electronics, Inc.

Title: ATI_Venus Pro_M2_MEM IF

Size: | Document Number: LA-9982P | Rev: 3.0

Date: Wednesday, May 29, 2013 | Sheet 53 of 57

Memory Partition A - Lower 16 bits

64X32 GDDR5

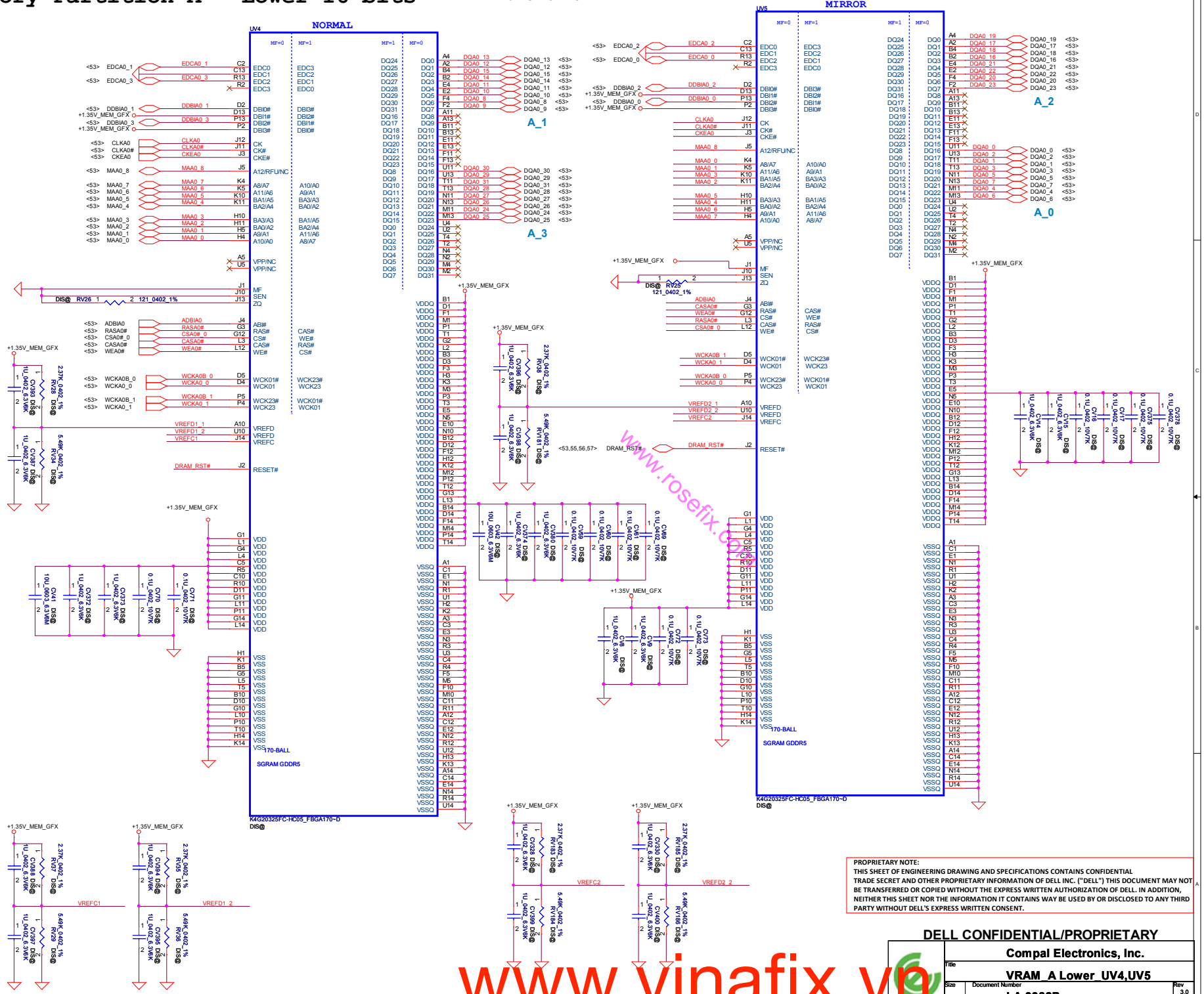

PROPRIETARY NOTE:
THIS SHEET OF ENGINEERING DRAWING AND SPECIFICATIONS CONTAINS CONFIDENTIAL TRADE SECRET AND OTHER PROPRIETARY INFORMATION OF DELL INC. ("DELL") THIS DOCUMENT MAY NOT BE TRANSFERRED OR COPIED WITHOUT THE EXPRESS WRITTEN AUTHORIZATION OF DELL. IN ADDITION, NEITHER THIS SHEET NOR THE INFORMATION IT CONTAINS WAY BE USED BY OR DISCLOSED TO ANY THIRD PARTY WITHOUT DELL'S EXPRESS WRITTEN CONSENT.

DELL CONFIDENTIAL/PROPRIETARY

Compal Electronics, Inc.

Title: VRAM_A Lower_UV4,UV5

Size: | Document Number: LA-9982P | Rev: 3.0

Date: Wednesday, May 29, 2013 | Sheet 54 of 57

www.vinafix.vn

Memory Partition A - Upper 16 bits

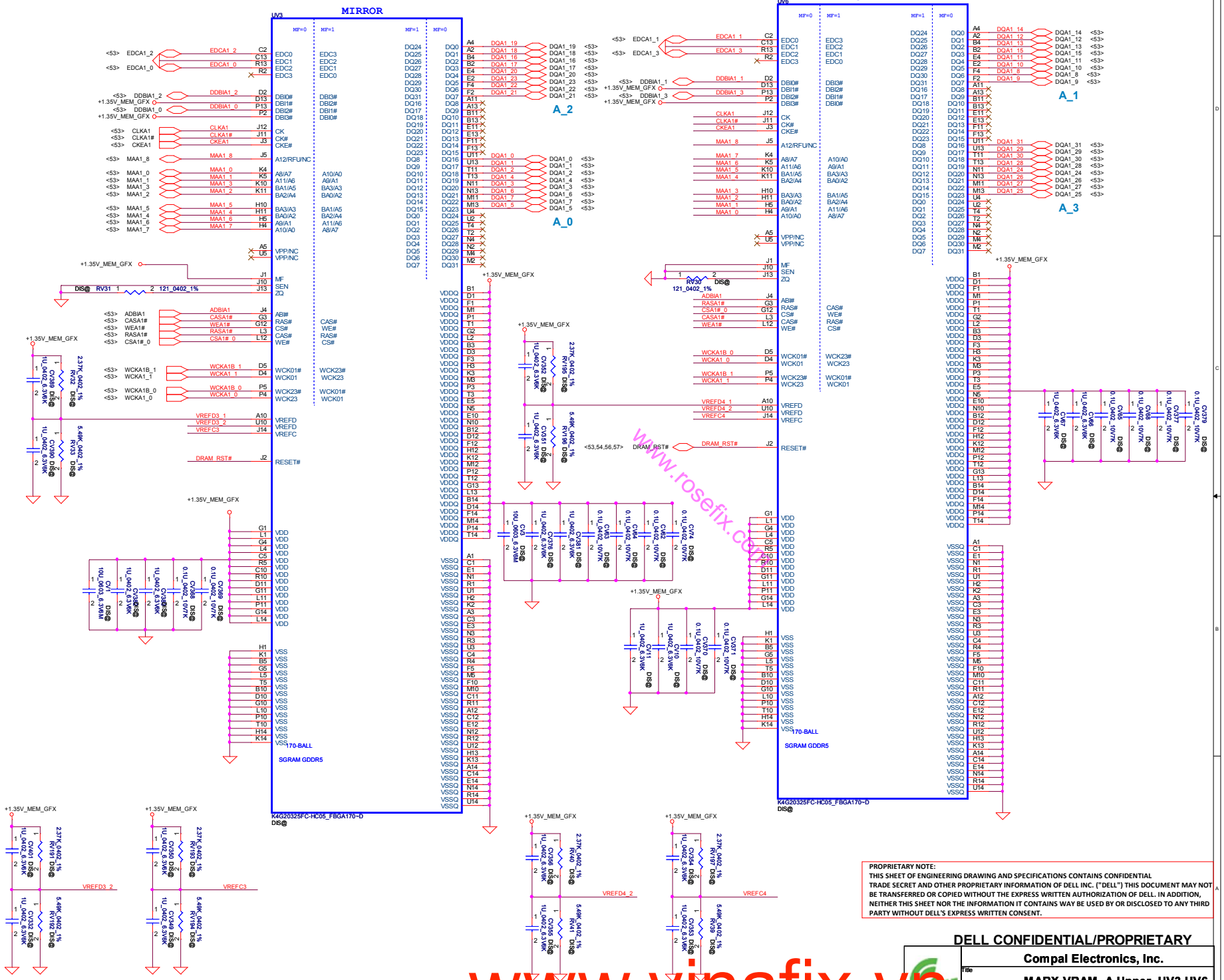

www.rosefix.com

PROPRIETARY NOTE:
THIS SHEET OF ENGINEERING DRAWING AND SPECIFICATIONS CONTAINS CONFIDENTIAL TRADE SECRET AND OTHER PROPRIETARY INFORMATION OF DELL INC. ("DELL") THIS DOCUMENT MAY NOT BE TRANSFERRED OR COPIED WITHOUT THE EXPRESS WRITTEN AUTHORIZATION OF DELL. IN ADDITION, NEITHER THIS SHEET NOR THE INFORMATION IT CONTAINS WAY BE USED BY OR DISCLOSED TO ANY THIRD PARTY WITHOUT DELL'S EXPRESS WRITTEN CONSENT.

DELL CONFIDENTIAL/PROPRIETARY

Compal Electronics, Inc.

Title: MARX-VRAM_A Upper_UV3,UV6

Size: | Document Number: LA-9982P | Rev: 3.0

Date: Wednesday, May 29, 2013 | Sheet 55 of 57

www.vinafix.vn

Memory Partition B - Lower 16 bits

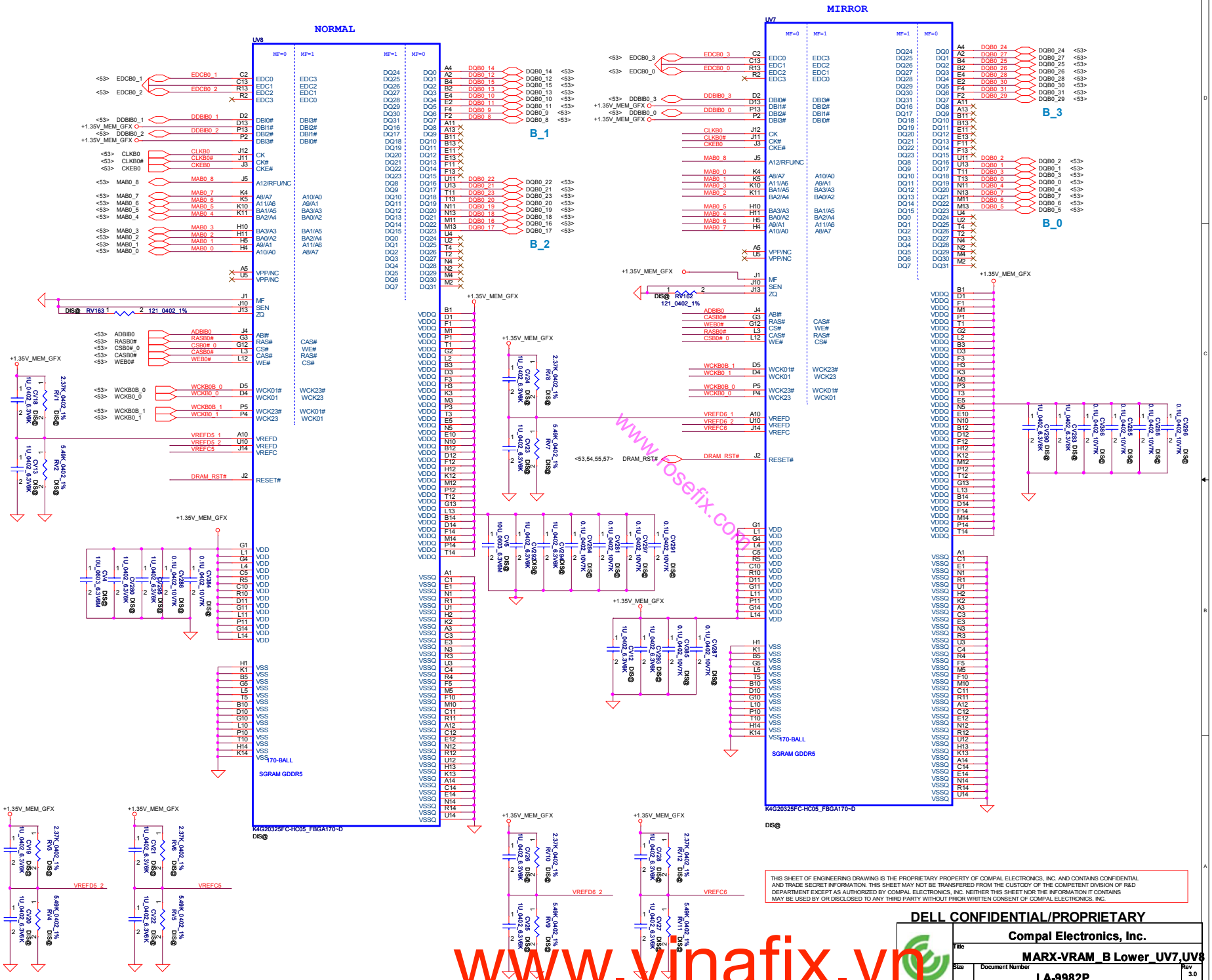

www.vinafix.vn
www.rosefix.com

THIS SHEET OF ENGINEERING DRAWING IS THE PROPRIETARY PROPERTY OF COMPAL ELECTRONICS, INC. AND CONTAINS CONFIDENTIAL AND TRADE SECRET INFORMATION. THIS SHEET MAY NOT BE TRANSFERED FROM THE CUSTODY OF THE COMPETENT DIVISION OF R&D DEPARTMENT EXCEPT AS AUTHORIZED BY COMPAL ELECTRONICS, INC. NEITHER THIS SHEET NOR THE INFORMATION IT CONTAINS MAY BE USED BY OR DISCLOSED TO ANY THIRD PARTY WITHOUT PRIOR WRITTEN CONSENT OF COMPAL ELECTRONICS, INC.

DELL CONFIDENTIAL/PROPRIETARY

	Compal Electronics, Inc.
Title	MARX-VRAM_B Lower_UV7,UV8
Size / Document Number	LA-9982P
Rev	3.0
Date: Wednesday, May 29, 2013	Sheet 56 of 57

Memory Partition B - Upper 16 bits

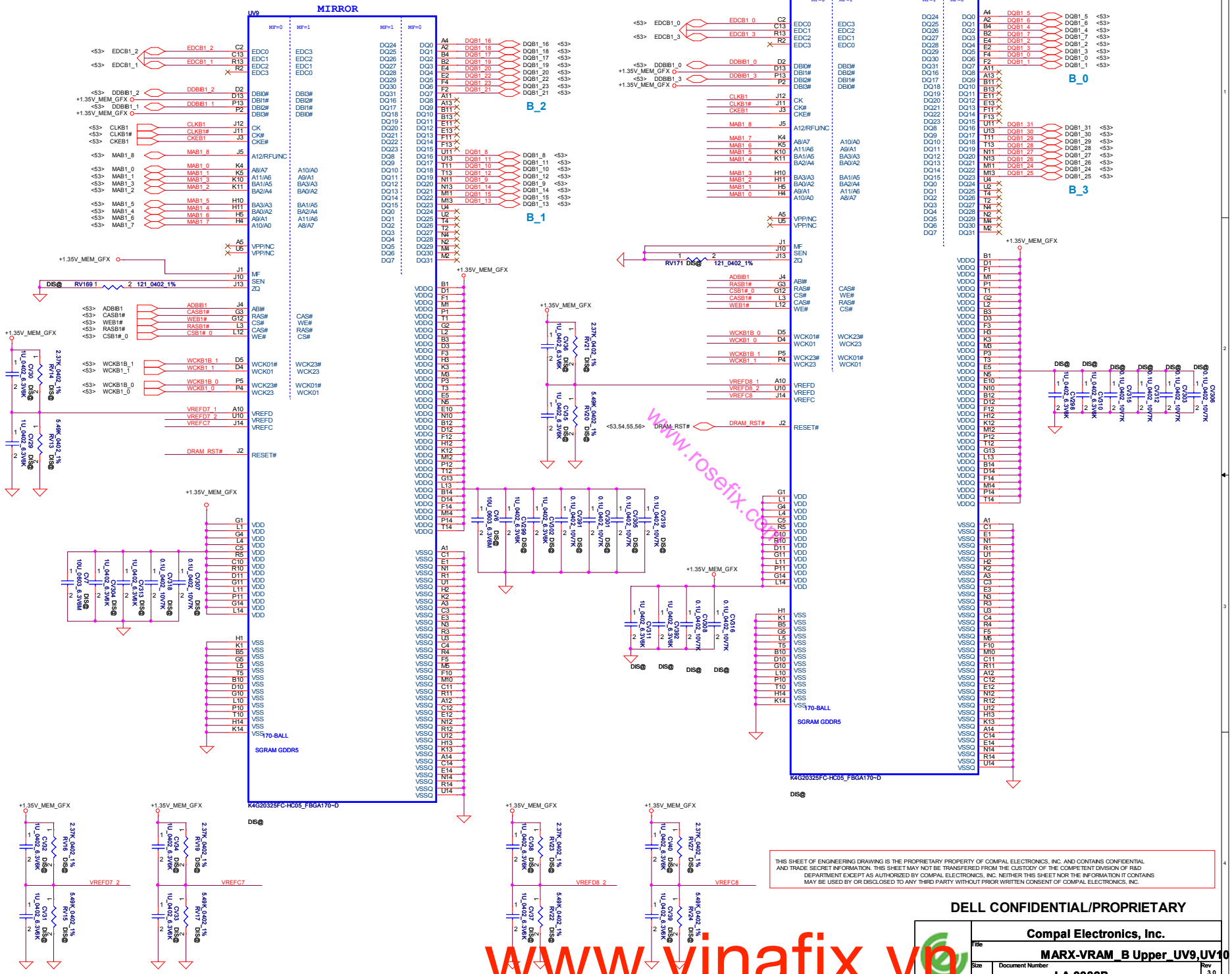

THIS SHEET OF ENGINEERING DRAWING IS THE PROPRIETARY PROPERTY OF COMPAL ELECTRONICS, INC. AND CONTAINS CONFIDENTIAL AND TRADE SECRET INFORMATION. THIS SHEET MAY NOT BE TRANSFERED FROM THE CUSTODY OF THE COMPETENT DIVISION OF R&D DEPARTMENT EXCEPT AS AUTHORIZED BY COMPAL ELECTRONICS, INC. NEITHER THIS SHEET NOR THE INFORMATION IT CONTAINS MAY BE USED BY OR DISCLOSED TO ANY THIRD PARTY WITHOUT PRIOR WRITTEN CONSENT OF COMPAL ELECTRONICS, INC.

DELL CONFIDENTIAL/PROPRIETARY

Compal Electronics, Inc.	
Title	MARX-VRAM_B Upper_UV9,UV10
Size / Document Number	LA-9982P
Rev	3.0
Date: Wednesday, May 29, 2013	Sheet 57 of 57

www.vinafix.vn