Compal Confidential

VIWZ1/VIWZ2 DIS M/B Schematics Document

Intel Ivy Bridge Processor with DDRIII + Panther Point PCH

nVIDIA N13P

2012-11-10

LA-9061P

REV:2.A

CONFIDENTIAL

Security Classification	Compal Secret Data			Compal Electronics, Inc.
Issued Date	2011/06/15	Deciphered Date	2012/07/11	Title: SCHEMATICS,MB A9061
				Size: Custom; Document Number: 4019K3; Rev: C
				Date: Monday, December 17, 2012; Sheet 1 of 63

THIS SHEET OF ENGINEERING DRAWING IS THE PROPRIETARY PROPERTY OF COMPAL ELECTRONICS, INC. AND CONTAINS CONFIDENTIAL AND TRADE SECRET INFORMATION. THIS SHEET MAY NOT BE TRANSFERED FROM THE CUSTODY OF THE COMPETENT DIVISION OF R&D DEPARTMENT EXCEPT AS AUTHORIZED BY COMPAL ELECTRONICS, INC. NEITHER THIS SHEET NOR THE INFORMATION IT CONTAINS MAY BE USED BY OR DISCLOSED TO ANY THIRD PARTY WITHOUT PRIOR WRITTEN CONSENT OF COMPAL ELECTRONICS, INC.

Compal confidential
File Name : VIWZ1/VIWZ2

U4 HM76@ PCH-HM76 SA00005FH70
U4 HM70@ PCH-HM70 SA00005MQ80
ZZZ LA9061 DA_PCB DA80000TU2A

VIWZ1
LS9061P PWR/B
LS9062P USB/B

VIWZ2
LS9061P PWR/B
LS9062P USB/B
LS9063P ODD/B
LS9064P LED/B

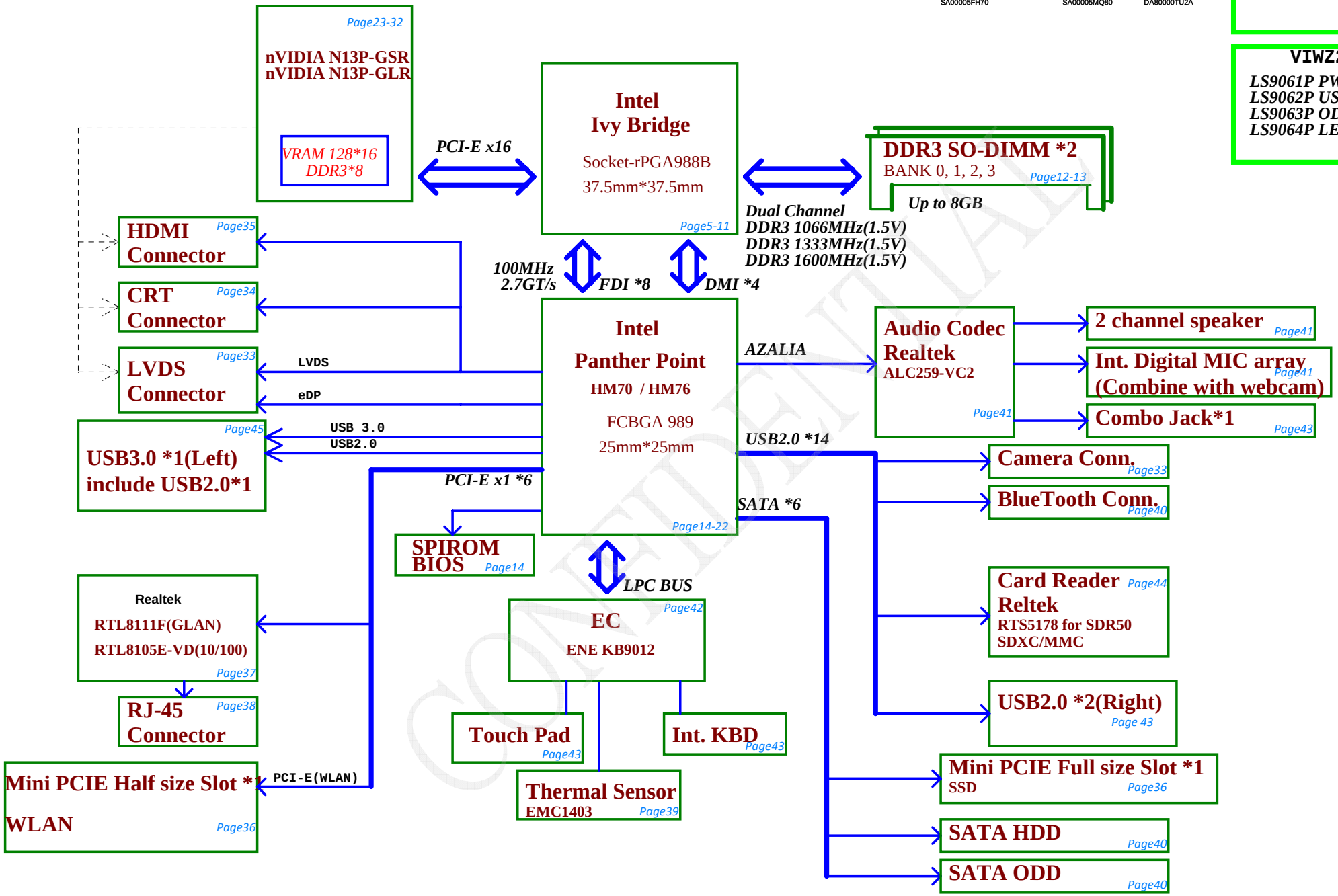

CONFIDENTIAL

Security Classification	Compal Secret Data		Compal Electronics, Inc.
Issued Date	2011/06/15	Deciphered Date 2012/07/11	Title SCHEMATICS,MB A9061
			Size Custom / Document Number 4019K3 / Rev C
			Date: Monday, December 17, 2012 / Sheet 2 of 63

THIS SHEET OF ENGINEERING DRAWING IS THE PROPRIETARY PROPERTY OF COMPAL ELECTRONICS, INC. AND CONTAINS CONFIDENTIAL AND TRADE SECRET INFORMATION. THIS SHEET MAY NOT BE TRANSFERED FROM THE CUSTODY OF THE COMPETENT DIVISION OF R&D DEPARTMENT EXCEPT AS AUTHORIZED BY COMPAL ELECTRONICS, INC. NEITHER THIS SHEET NOR THE INFORMATION IT CONTAINS MAY BE USED BY OR DISCLOSED TO ANY THIRD PARTY WITHOUT PRIOR WRITTEN CONSENT OF COMPAL ELECTRONICS, INC.

Voltage Rails

State \ power plane	+B	+5VALW +3VALW	+1.5V	+5VS +3VS +1.5VS +V1.05S_VCCP +VCC_CORE +VGA_CORE +VCC_GFXCORE_AXG +1.8VS +0.75VS +1.05VS
S0	O	O	O	O
S3	O	O	O	X
S5 S4/AC	O	O	X	X
S5 S4/ Battery only	O	X	X	X
S5 S4/AC & Battery don't exist	X	X	X	X

STATE \ SIGNAL	SLP_S1#	SLP_S3#	SLP_S4#	SLP_S5#	+VALW	+V	+VS	Clock
Full ON	HIGH	HIGH	HIGH	HIGH	ON	ON	ON	ON
S1(Power On Suspend)	LOW	HIGH	HIGH	HIGH	ON	ON	ON	LOW
S3 (Suspend to RAM)	LOW	LOW	HIGH	HIGH	ON	ON	OFF	OFF
S4 (Suspend to Disk)	LOW	LOW	LOW	HIGH	ON	OFF	OFF	OFF
S5 (Soft OFF)	LOW	LOW	LOW	LOW	ON	OFF	OFF	OFF

BOARD ID Table

Board ID	PCB Revision
0	1.0
1	0.3
2	0.2
3	0.1
4	
5	
6	
7	

Board ID / SKU ID Table for AD channel

Vcc	3.3V +/- 5%
Ra/Rc/Re	100K +/- 5%

Board ID	Rb / Rd / Rf	V_{AD_BID} min	V_{AD_BID} typ	V_{AD_BID} max	Porject	Phase
0	0	0 V	0 V	0 V	Z-series	MP
1	8.2K +/- 5%	0.216 V	0.250 V	0.289 V	Z-series	PVT
2	18K +/- 5%	0.436 V	0.503 V	0.538 V	Z-series	DVT
3	33K +/- 5%	0.712 V	0.819 V	0.875 V	Z-series	EVT
4	56K +/- 5%	1.036 V	1.185 V	1.264 V	Reserved	EVT
5	100K +/- 5%	1.453 V	1.650 V	1.759 V	Reserved	DVT
6	200K +/- 5%	1.935 V	2.200 V	2.341 V	Reserved	PVT
7	NC	2.500 V	3.300 V	3.300 V	Reserved	MP

EC SM Bus1 address

Device	Address
Smart Battery	0001 011X b
USB Charger	1010 111X b

EC SM Bus2 address

Device	Address
Thermal Sensor EMC1403	1001_101xb

PCH SM Bus address

Device	Address
DDR DIMM0	1001 000Xb
DDR DIMM2	1001 010Xb

NV-GPU SM Bus address

Device	Address
Internal thermal sensor	1001 111Xb (0x9E)

USB Port Table

	USB 2.0	Port	3 External USB Port
EHCI1 USB3.0	UHCI0	0	USB Port (Left Side) USB3.0
		1	Touch Screen
	UHCI1	2	Blue Tooth
		3	Camera
EHCI1	UHCI2	4	
		5	
	UHCI3	6	
		7	
EHCI2	UHCI4	8	USB Port (Right Side USB-BD)
		9	USB Port (Right Side USB-BD)
	UHCI5	10	Mini Card(WLAN)
		11	Card Reader
	UHCI6	12	
		13	

BOM Structure Table

BTO Item	BOM Structure
GPU:N13P-GS&GL	N13P@
OPTIMUS part	OPT@
integrate Graphic part	UMA@
GPU:N13P-GS&GSR	GS@
GPU:N13P-GL&GLR	GL@
GPU:N13P-GS Strap	GS1@
GPU:N13P-GL Strap	GL1@
GPU:N13P-GSR Strap	GSR@
GPU:N13P-GLR Strap	GLR@
OPTIMUS no support GCLK	OPTNOGCLK@
OPTIMUS support GCLK	OPTGCLK@
Support Green CLK	GCLK@
not Support Green CLK	NOGCLK@
Support Green CLK 244	GCLK244@
Support Green CLK 304	GCLK304@
Cardreader	CR@
Support HP Woofer	woofer@
Gastube	Gastube@
EC RESET function	RESET@
HDMI	HDMI@
BlueTooth	BT@
Connector	ME@
45 LEVEL	45@
10/100 LAN	8105@
GIGA LAN	GIGA@
Deep Sleep S3	DS3@
Not Support Deep Sleep S3	NODS3@
ISCT	AOAC@
ISCT not support	NOAOAC@
Camera	CMOS@
For Z490 (14")	14@
For Z590 (15")	15@
Unpop	@
USB Charger	CHG@
not USBCharger	NOCHG@
Keyboard Back Light	KBL@
Touch Screen	TS@
HM76 by PCH	HM76@
HM70 by PCH	HM70@
Cardreader RTS5178	RTS5178@
Cardreader RTS5170	RTS5170@
for 14" Touch Screen	TS_14@
for 15" Touch Screen	TS_15@

SMBUS Control Table

	SOURCE	VGA	BATT	KB9012	SODIMM	WLAN WWAN	Thermal Sensor	PCH	TP
SMB_EC_CK1 SMB_EC_DA1	KB9012 +3VALW	X	V +3VALW	X	X	X	X	X	X
SMB_EC_CK2 SMB_EC_DA2	KB9012 +3VALW	X	X	X	X	X	X	V +3VS	X
SMBCLK SMBDATA	PCH +3VALW	X	X	X	V +3VS	V +3VS	X	X	V +3VS
SML0CLK SML0DATA	PCH +3VALW	X	X	X	X	X	X	X	X
SML1CLK SML1DATA	PCH +3VALW	V +3VS	X	V +3VS	X	X	V +3VS	X	X

GPU BOM Structure Table

BOM Structure	N13P-GS	N13P-GL	N13P-GSR	N13P-GLR
OPT@	V	V	V	V
OPTNOGCLK@	V	V	V	V
N13P@	V	V	V	V
GS@	V		V	
GL@		V		V
GS1@	V			
GL1@		V		
GSR@			V	
GLR@				V

COMPEL DEVELOPMENT

Security Classification	Compal Secret Data		
Issued Date	2011/06/15	Deciphered Date	2012/07/11

THIS SHEET OF ENGINEERING DRAWING IS THE PROPRIETARY PROPERTY OF COMPAL ELECTRONICS, INC. AND CONTAINS CONFIDENTIAL AND TRADE SECRET INFORMATION. THIS SHEET MAY NOT BE TRANSFERED FROM THE CUSTODY OF THE COMPETENT DIVISION OF R&D DEPARTMENT EXCEPT AS AUTHORIZED BY COMPAL ELECTRONICS, INC. NEITHER THIS SHEET NOR THE INFORMATION IT CONTAINS MAY BE USED BY OR DISCLOSED TO ANY THIRD PARTY WITHOUT PRIOR WRITTEN CONSENT OF COMPAL ELECTRONICS, INC.

Compal Electronics, Inc.

Title: SCHEMATICS,MB A9061

Size: Custom | Document Number: 4019K3 | Rev: C

Date: Monday, December 17, 2012 | Sheet 3 of 63

Hot plug detect for IFP link C

VGA and GDDR3 Voltage Rails (N13x GPIO)

GPIO	I/O	ACTIVE	Function Description
GPIO0	OUT	-	GPU VID4
GPIO1	OUT	-	GPU VID3
GPIO2	OUT	H	Panel Back-Light brightness(PWM capable)
GPIO3	OUT	H	Panel Power Enable
GPIO4	OUT	H	Panel Back-Light On/Off (PWM)
GPIO5	OUT	-	GPU VID1
GPIO6	OUT	-	GPU VID2
GPIO7	OUT	N/A	
GPIO8	I/O	-	Thermal Catastrophic Over Temperature
GPIO9	OUT	-	Thermal Alert
GPIO10	OUT	-	Memory VREF Control
GPIO11	OUT	-	GPU VID0
GPIO12	IN		AC Power Detect Input (10K pull low)
GPIO13	OUT	-	GPU VID5
GPIO14	OUT	N/A	
GPIO15	IN		Hot plug detect for IFP link C
GPIO16	OUT	N/A	
GPIO17	IN	N/A	
GPIO18	IN		Hot Plug Detect for IFPE
GPIO19	IN	N/A	

Performance Mode P0 TDP at Tj = 102 C* (GDDR3)

	GPU (4)	Mem (1,5)	NVCLK /MCLK	NVVDD			FBVDD (1.35V)		FBVDDQ (GPU+Mem) (1.35V)		PCI Express (1.05V) (6)		I/O and PLLVDD (1.8V)		I/O and PLLVDD (1.05V)		Other (3.3V)	
Products	(W)	(W)	(MHz)	(V)	(A)	(W)	(A)	(W)	(A)	(W)	(mA)	(W)	(mA)	(W)	(mA)	(W)	(mA)	(W)
N13P-GL 64bit 1GB GDDR3	TBD	TBD	TBD	TBD	TBD	TBD	TBD	TBD	TBD	TBD	TBD	TBD	TBD	TBD	TBD	TBD	TBD	TBD

Physical Strapping pin	Power Rail	Logical Strapping Bit3	Logical Strapping Bit2	Logical Strapping Bit1	Logical Strapping Bit0
ROM_SCLK	+3VS_VGA	PCI_DEVID[4]	SUB_VENDOR	SLOT_CLK_CFG/PCI_DEVID[5]	PEX_PLL_EN_TERM
ROM_SI	+3VS_VGA	RAM_CFG[3]	RAM_CFG[2]	RAM_CFG[1]	RAM_CFG[0]
ROM_SO	+3VS_VGA	FB[1]	FB[0]	SMB_ALT_ADDR	VGA_DEVICE
STRAP0	+3VS_VGA	USER[3]	USER[2]	USER[1]	USER[0]
STRAP1	+3VS_VGA	3GIO_PAD_CFG_ADR[3]	3GIO_PAD_CFG_ADR[2]	3GIO_PAD_CFG_ADR[1]	3GIO_PAD_CFG_ADR[0]
STRAP2	+3VS_VGA	PCI_DEVID[3]	PCI_DEVID[2]	PCI_DEVID[1]	PCI_DEVID[0]
STRAP3	+3VS_VGA	SOR3_EXPOSED	SOR2_EXPOSED	SOR1_EXPOSED	SOR0_EXPOSED
STRAP4	+3VS_VGA	RESERVED	PCIE_SPEED_CHANGE_GEN3	PCIE_MAX_SPEED	DP_PLL_VDD33V

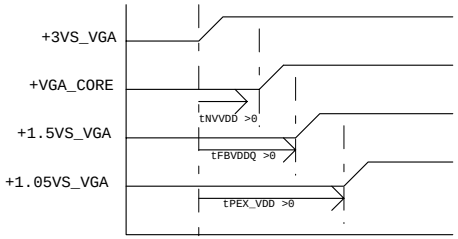

1. all power rail ramp up time should be larger than 40us

2. Optimus system VDD33 avoids drop down earlier than NVDD and FBVDDQ

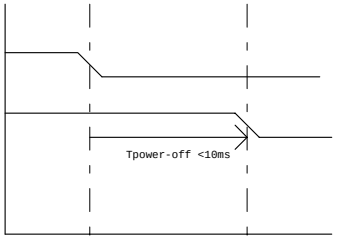

1.all GPU power rails should be turned off within 10ms

CONFIDENTIAL

Security Classification	Compal Secret Data			Compal Electronics, Inc.
Issued Date	2011/06/15	Deciphered Date	2012/07/11	Title: SCHEMATICS,MB A9061

THIS SHEET OF ENGINEERING DRAWING IS THE PROPRIETARY PROPERTY OF COMPAL ELECTRONICS, INC. AND CONTAINS CONFIDENTIAL AND TRADE SECRET INFORMATION. THIS SHEET MAY NOT BE TRANSFERED FROM THE CUSTODY OF THE COMPETENT DIVISION OF R&D DEPARTMENT EXCEPT AS AUTHORIZED BY COMPAL ELECTRONICS, INC. NEITHER THIS SHEET NOR THE INFORMATION IT CONTAINS MAY BE USED BY OR DISCLOSED TO ANY THIRD PARTY WITHOUT PRIOR WRITTEN CONSENT OF COMPAL ELECTRONICS, INC.

Size	Document Number	Rev
Custom	4019K3	C

Date: Monday, December 17, 2012 Sheet 4 of 63

PEG_ICOMPI and RCOMPO signals should be shorted and routed
with - max length = 500 mils - typical impedance = 43 mohms
PEG_ICOMPO signals should be routed with - max length = 500 mils
- typical impedance = 14.5 mohms

+V1.05S_VCCP

R1
24.9_0402_1%

JCPU1A

PEG_ICOMPI J22
PEG_ICOMPO J21
PEG_RCOMPO H22
PEG_COMP

DMI

[16] DMI_CRX_PTX_N0 B27 DMI_RX#[0]
[16] DMI_CRX_PTX_N1 B25 DMI_RX#[1]
[16] DMI_CRX_PTX_N2 A25 DMI_RX#[2]
[16] DMI_CRX_PTX_N3 B24 DMI_RX#[3]

[16] DMI_CRX_PTX_P0 B28 DMI_RX[0]
[16] DMI_CRX_PTX_P1 B26 DMI_RX[1]
[16] DMI_CRX_PTX_P2 A24 DMI_RX[2]
[16] DMI_CRX_PTX_P3 B23 DMI_RX[3]

[16] DMI_CTX_PRX_N0 G21 DMI_TX#[0]
[16] DMI_CTX_PRX_N1 E22 DMI_TX#[1]
[16] DMI_CTX_PRX_N2 F21 DMI_TX#[2]
[16] DMI_CTX_PRX_N3 D21 DMI_TX#[3]

[16] DMI_CTX_PRX_P0 G22 DMI_TX[0]
[16] DMI_CTX_PRX_P1 D22 DMI_TX[1]
[16] DMI_CTX_PRX_P2 F20 DMI_TX[2]
[16] DMI_CTX_PRX_P3 C21 DMI_TX[3]

Intel(R) FDI

[16] FDI_CTX_PRX_N0 A21 FDI0_TX#[0]
[16] FDI_CTX_PRX_N1 H19 FDI0_TX#[1]
[16] FDI_CTX_PRX_N2 E19 FDI0_TX#[2]
[16] FDI_CTX_PRX_N3 F18 FDI0_TX#[3]
[16] FDI_CTX_PRX_N4 B21 FDI1_TX#[0]
[16] FDI_CTX_PRX_N5 C20 FDI1_TX#[1]
[16] FDI_CTX_PRX_N6 D18 FDI1_TX#[2]
[16] FDI_CTX_PRX_N7 E17 FDI1_TX#[3]

[16] FDI_CTX_PRX_P0 A22 FDI0_TX[0]
[16] FDI_CTX_PRX_P1 G19 FDI0_TX[1]
[16] FDI_CTX_PRX_P2 E20 FDI0_TX[2]
[16] FDI_CTX_PRX_P3 G18 FDI0_TX[3]
[16] FDI_CTX_PRX_P4 B20 FDI1_TX[0]
[16] FDI_CTX_PRX_P5 C19 FDI1_TX[1]
[16] FDI_CTX_PRX_P6 D19 FDI1_TX[2]
[16] FDI_CTX_PRX_P7 F17 FDI1_TX[3]

[16] FDI_FSYNC0 J18 FDI0_FSYNC
[16] FDI_FSYNC1 J17 FDI1_FSYNC

[16] FDI_INT H20 FDI_INT

[16] FDI_LSYNC0 J19 FDI0_LSYNC
[16] FDI_LSYNC1 H17 FDI1_LSYNC

eDP_COMPIO and ICOMPO signals should be shorted near balls and routed with typical impedance <25 mohms

+V1.05S_VCCP

R7
24.9_0402_1%

EDP_COMP

eDP

A18 eDP_COMPIO
A17 eDP_ICOMPO
B16 eDP_HPD#

C15 eDP_AUX
D15 eDP_AUX#

C17 eDP_TX[0]
E16 eDP_TX[1]
C16 eDP_TX[2]
G15 eDP_TX[3]

C18 eDP_TX#[0]
E16 eDP_TX#[1]
D16 eDP_TX#[2]
F15 eDP_TX#[3]

TYCO_2013620-2_IVY BRIDGE

PCI EXPRESS* - GRAPHICS

PCIE_CRX_GTX_N[0..15] [23]

PEG_RX#[0]	K33	PCIE_CRX_GTX_N15
PEG_RX#[1]	M35	PCIE_CRX_GTX_N14
PEG_RX#[2]	L34	PCIE_CRX_GTX_N13
PEG_RX#[3]	J35	PCIE_CRX_GTX_N12
PEG_RX#[4]	J32	PCIE_CRX_GTX_N11
PEG_RX#[5]	H34	PCIE_CRX_GTX_N10
PEG_RX#[6]	H31	PCIE_CRX_GTX_N9
PEG_RX#[7]	G33	PCIE_CRX_GTX_N8
PEG_RX#[8]	G30	PCIE_CRX_GTX_N7
PEG_RX#[9]	E35	PCIE_CRX_GTX_N6
PEG_RX#[10]	E34	PCIE_CRX_GTX_N5
PEG_RX#[11]	E32	PCIE_CRX_GTX_N4
PEG_RX#[12]	D33	PCIE_CRX_GTX_N3
PEG_RX#[13]	D31	PCIE_CRX_GTX_N2
PEG_RX#[14]	B33	PCIE_CRX_GTX_N1
PEG_RX#[15]	C32	PCIE_CRX_GTX_N0

PCIE_CRX_GTX_P[0..15] [23]

PEG_RX[0]	J33	PCIE_CRX_GTX_P15
PEG_RX[1]	L35	PCIE_CRX_GTX_P14
PEG_RX[2]	K34	PCIE_CRX_GTX_P13
PEG_RX[3]	H35	PCIE_CRX_GTX_P12
PEG_RX[4]	H32	PCIE_CRX_GTX_P11
PEG_RX[5]	G34	PCIE_CRX_GTX_P10
PEG_RX[6]	G31	PCIE_CRX_GTX_P9
PEG_RX[7]	F33	PCIE_CRX_GTX_P8
PEG_RX[8]	F30	PCIE_CRX_GTX_P7
PEG_RX[9]	E35	PCIE_CRX_GTX_P6
PEG_RX[10]	E33	PCIE_CRX_GTX_P5
PEG_RX[11]	F32	PCIE_CRX_GTX_P4
PEG_RX[12]	D34	PCIE_CRX_GTX_P3
PEG_RX[13]	E31	PCIE_CRX_GTX_P2
PEG_RX[14]	C33	PCIE_CRX_GTX_P1
PEG_RX[15]	B32	PCIE_CRX_GTX_P0

PCIE_CTX_GRX_N[0..15] [23]

PEG_TX#[0]	M29	PCIE_CTX_GRX_C_N15	C1	N13P@	2 0.22U 0402 6.3V K	PCIE_CTX_GRX_N15
PEG_TX#[1]	M32	PCIE_CTX_GRX_C_N14	C2	N13P@	2 0.22U 0402 6.3V K	PCIE_CTX_GRX_N14
PEG_TX#[2]	M31	PCIE_CTX_GRX_C_N13	C3	N13P@	2 0.22U 0402 6.3V K	PCIE_CTX_GRX_N13
PEG_TX#[3]	L32	PCIE_CTX_GRX_C_N12	C4	N13P@	2 0.22U 0402 6.3V K	PCIE_CTX_GRX_N12
PEG_TX#[4]	L29	PCIE_CTX_GRX_C_N11	C5	N13P@	2 0.22U 0402 6.3V K	PCIE_CTX_GRX_N11
PEG_TX#[5]	K31	PCIE_CTX_GRX_C_N10	C6	N13P@	2 0.22U 0402 6.3V K	PCIE_CTX_GRX_N10
PEG_TX#[6]	K28	PCIE_CTX_GRX_C_N9	C7	N13P@	2 0.22U 0402 6.3V K	PCIE_CTX_GRX_N9
PEG_TX#[7]	J30	PCIE_CTX_GRX_C_N8	C8	N13P@	2 0.22U 0402 6.3V K	PCIE_CTX_GRX_N8
PEG_TX#[8]	J28	PCIE_CTX_GRX_C_N7	C9	OPT@1	2 0.22U 0402 6.3V K	PCIE_CTX_GRX_N7
PEG_TX#[9]	H29	PCIE_CTX_GRX_C_N6	C10	OPT@1	2 0.22U 0402 6.3V K	PCIE_CTX_GRX_N6
PEG_TX#[10]	G27	PCIE_CTX_GRX_C_N5	C11	OPT@1	2 0.22U 0402 6.3V K	PCIE_CTX_GRX_N5
PEG_TX#[11]	E29	PCIE_CTX_GRX_C_N4	C12	OPT@1	2 0.22U 0402 6.3V K	PCIE_CTX_GRX_N4
PEG_TX#[12]	F27	PCIE_CTX_GRX_C_N3	C13	OPT@1	2 0.22U 0402 6.3V K	PCIE_CTX_GRX_N3
PEG_TX#[13]	D28	PCIE_CTX_GRX_C_N2	C14	OPT@1	2 0.22U 0402 6.3V K	PCIE_CTX_GRX_N2
PEG_TX#[14]	F26	PCIE_CTX_GRX_C_N1	C15	OPT@1	2 0.22U 0402 6.3V K	PCIE_CTX_GRX_N1
PEG_TX#[15]	E25	PCIE_CTX_GRX_C_N0	C16	OPT@1	2 0.22U 0402 6.3V K	PCIE_CTX_GRX_N0

PCIE_CTX_GRX_P[0..15] [23]

PEG_TX[0]	M28	PCIE_CTX_GRX_C_P15	C17	N13P@	2 0.22U 0402 6.3V K	PCIE_CTX_GRX_P15
PEG_TX[1]	M33	PCIE_CTX_GRX_C_P14	C18	N13P@	2 0.22U 0402 6.3V K	PCIE_CTX_GRX_P14
PEG_TX[2]	M30	PCIE_CTX_GRX_C_P13	C19	N13P@	2 0.22U 0402 6.3V K	PCIE_CTX_GRX_P13
PEG_TX[3]	L31	PCIE_CTX_GRX_C_P12	C20	N13P@	2 0.22U 0402 6.3V K	PCIE_CTX_GRX_P12
PEG_TX[4]	L28	PCIE_CTX_GRX_C_P11	C21	N13P@	2 0.22U 0402 6.3V K	PCIE_CTX_GRX_P11
PEG_TX[5]	K30	PCIE_CTX_GRX_C_P10	C22	N13P@	2 0.22U 0402 6.3V K	PCIE_CTX_GRX_P10
PEG_TX[6]	K27	PCIE_CTX_GRX_C_P9	C23	N13P@	2 0.22U 0402 6.3V K	PCIE_CTX_GRX_P9
PEG_TX[7]	J29	PCIE_CTX_GRX_C_P8	C24	N13P@	2 0.22U 0402 6.3V K	PCIE_CTX_GRX_P8
PEG_TX[8]	J27	PCIE_CTX_GRX_C_P7	C25	OPT@1	2 0.22U 0402 6.3V K	PCIE_CTX_GRX_P7
PEG_TX[9]	H28	PCIE_CTX_GRX_C_P6	C26	OPT@1	2 0.22U 0402 6.3V K	PCIE_CTX_GRX_P6
PEG_TX[10]	G28	PCIE_CTX_GRX_C_P5	C27	OPT@1	2 0.22U 0402 6.3V K	PCIE_CTX_GRX_P5
PEG_TX[11]	E28	PCIE_CTX_GRX_C_P4	C28	OPT@1	2 0.22U 0402 6.3V K	PCIE_CTX_GRX_P4
PEG_TX[12]	E28	PCIE_CTX_GRX_C_P3	C29	OPT@1	2 0.22U 0402 6.3V K	PCIE_CTX_GRX_P3
PEG_TX[13]	D27	PCIE_CTX_GRX_C_P2	C30	OPT@1	2 0.22U 0402 6.3V K	PCIE_CTX_GRX_P2
PEG_TX[14]	E26	PCIE_CTX_GRX_C_P1	C31	OPT@1	2 0.22U 0402 6.3V K	PCIE_CTX_GRX_P1
PEG_TX[15]	D25	PCIE_CTX_GRX_C_P0	C32	OPT@1	2 0.22U 0402 6.3V K	PCIE_CTX_GRX_P0

PEG Static Lane Reversal - CFG2 is for the 16x

CFG2	1: Normal Operation; Lane # definition matches socket pin map definition * 0:Lane Reversed

CONFIDENTIAL

Security Classification	Compal Secret Data		
Issued Date	2011/06/15	Deciphered Date	2012/07/11

THIS SHEET OF ENGINEERING DRAWING IS THE PROPRIETARY PROPERTY OF COMPAL ELECTRONICS, INC. AND CONTAINS CONFIDENTIAL AND TRADE SECRET INFORMATION. THIS SHEET MAY NOT BE TRANSFERED FROM THE CUSTODY OF THE COMPETENT DIVISION OF R&D DEPARTMENT EXCEPT AS AUTHORIZED BY COMPAL ELECTRONICS, INC. NEITHER THIS SHEET NOR THE INFORMATION IT CONTAINS MAY BE USED BY OR DISCLOSED TO ANY THIRD PARTY WITHOUT PRIOR WRITTEN CONSENT OF COMPAL ELECTRONICS, INC.

Title: SCHEMATICS,MB A9061

Size: Custom | Document Number: 4019K3 | Rev: C

Date: Monday, December 17, 2012 | Sheet 5 of 63

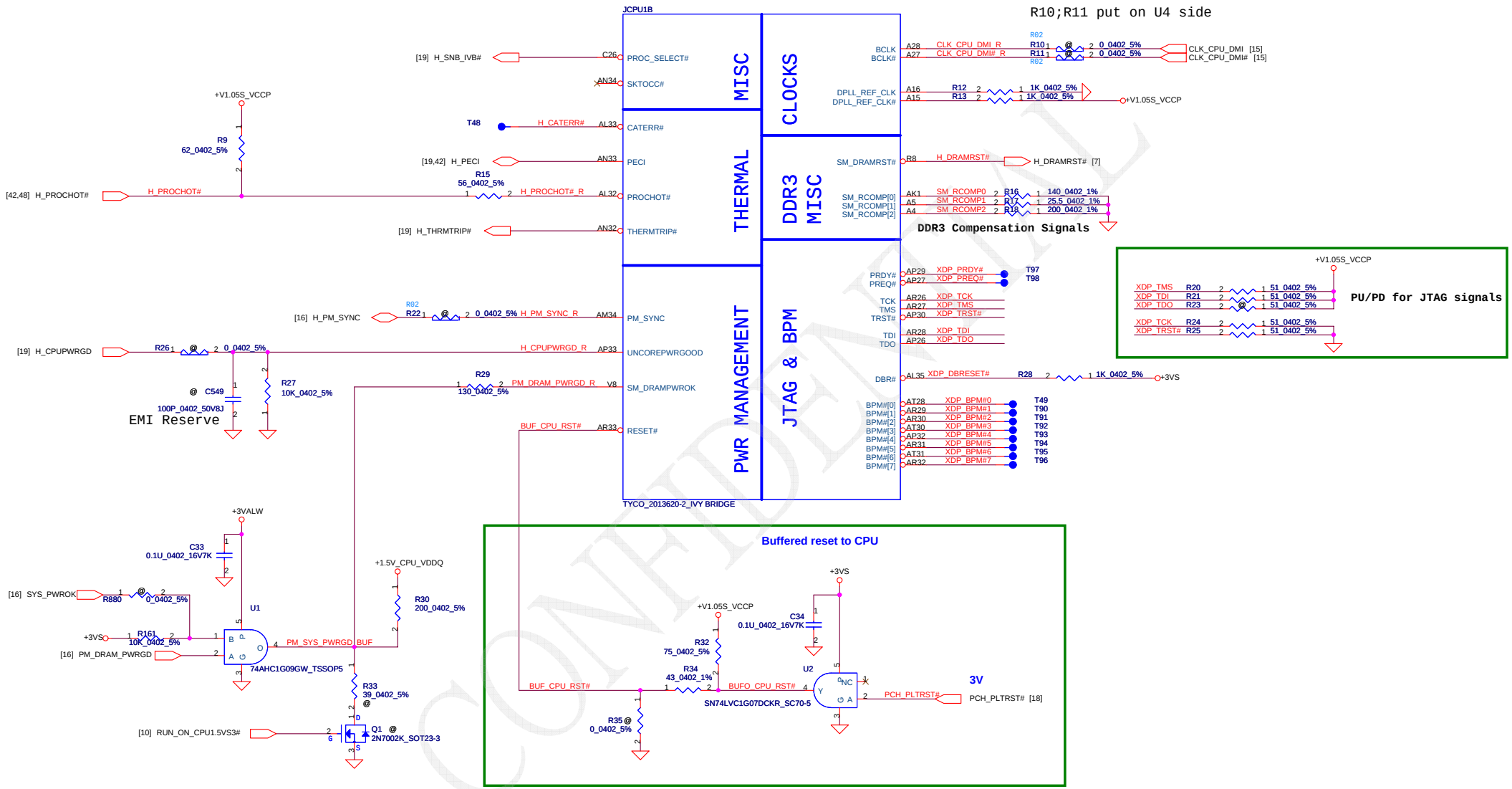

CONFIDENTIAL

Security Classification	Compal Secret Data		
Issued Date	2011/06/15	Deciphered Date	2012/07/11

THIS SHEET OF ENGINEERING DRAWING IS THE PROPRIETARY PROPERTY OF COMPAL ELECTRONICS, INC. AND CONTAINS CONFIDENTIAL AND TRADE SECRET INFORMATION. THIS SHEET MAY NOT BE TRANSFERED FROM THE CUSTODY OF THE COMPETENT DIVISION OF R&D DEPARTMENT EXCEPT AS AUTHORIZED BY COMPAL ELECTRONICS, INC. NEITHER THIS SHEET NOR THE INFORMATION IT CONTAINS MAY BE USED BY OR DISCLOSED TO ANY THIRD PARTY WITHOUT PRIOR WRITTEN CONSENT OF COMPAL ELECTRONICS, INC.

Compal Electronics, Inc.

Title: SCHEMATICS,MB A9061

Size: Custom | Document Number: 4019K3 | Rev: C

Date: Monday, December 17, 2012 | Sheet 6 of 63

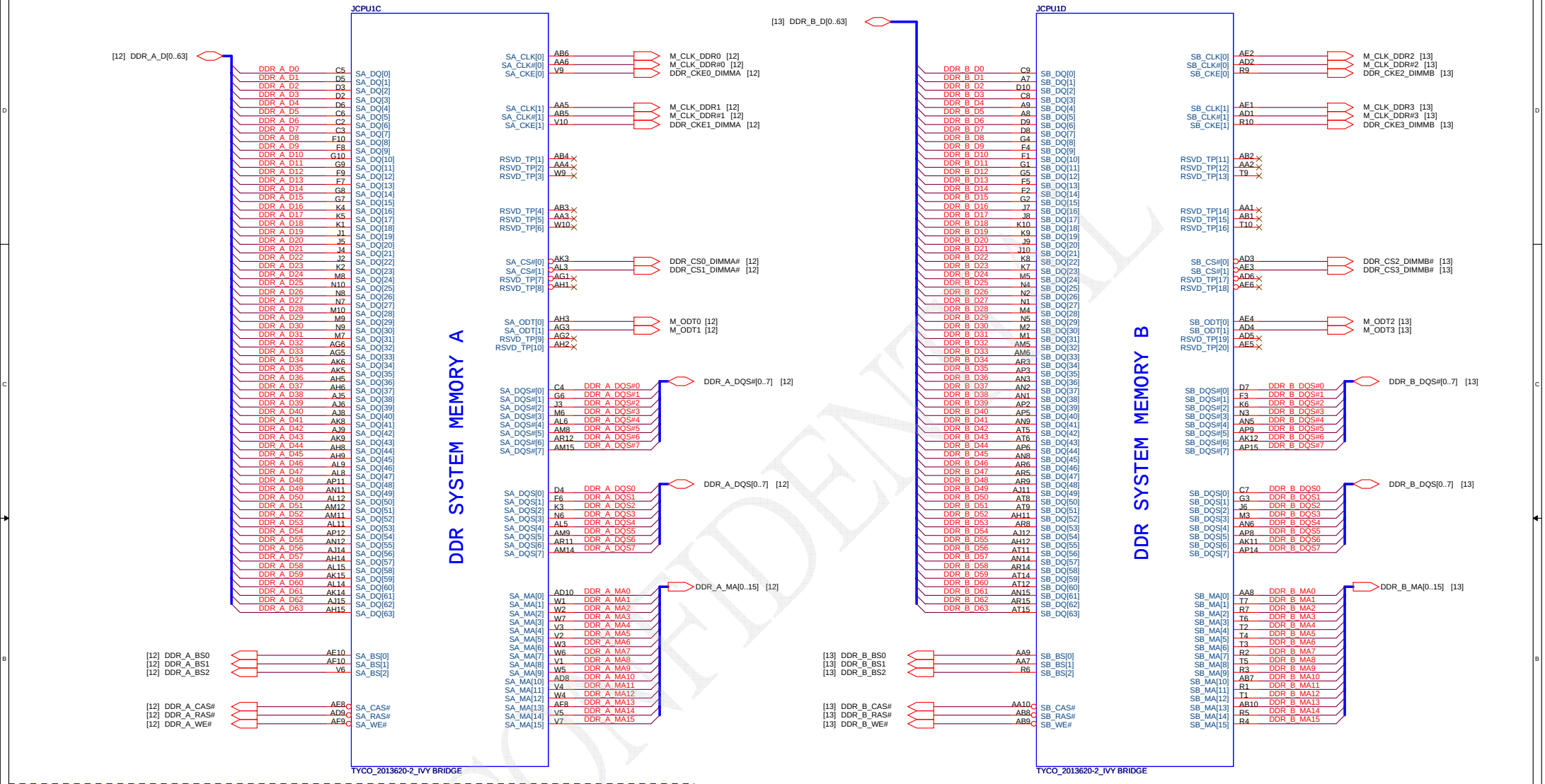

Security Classification	Compal Secret Data			Compal Electronics, Inc.
Issued Date	2011/06/15	Deciphered Date	2012/07/11	Title: SCHEMATICS,MB A9061
				Size: Custom; Document Number: 4019K3; Rev: C
				Date: Monday, December 17, 2012; Sheet 7 of 63

THIS SHEET OF ENGINEERING DRAWING IS THE PROPRIETARY PROPERTY OF COMPAL ELECTRONICS, INC. AND CONTAINS CONFIDENTIAL AND TRADE SECRET INFORMATION. THIS SHEET MAY NOT BE TRANSFERED FROM THE CUSTODY OF THE COMPETENT DIVISION OF R&D DEPARTMENT EXCEPT AS AUTHORIZED BY COMPAL ELECTRONICS, INC. NEITHER THIS SHEET NOR THE INFORMATION IT CONTAINS MAY BE USED BY OR DISCLOSED TO ANY THIRD PARTY WITHOUT PRIOR WRITTEN CONSENT OF COMPAL ELECTRONICS, INC.

CFG Straps for Processor

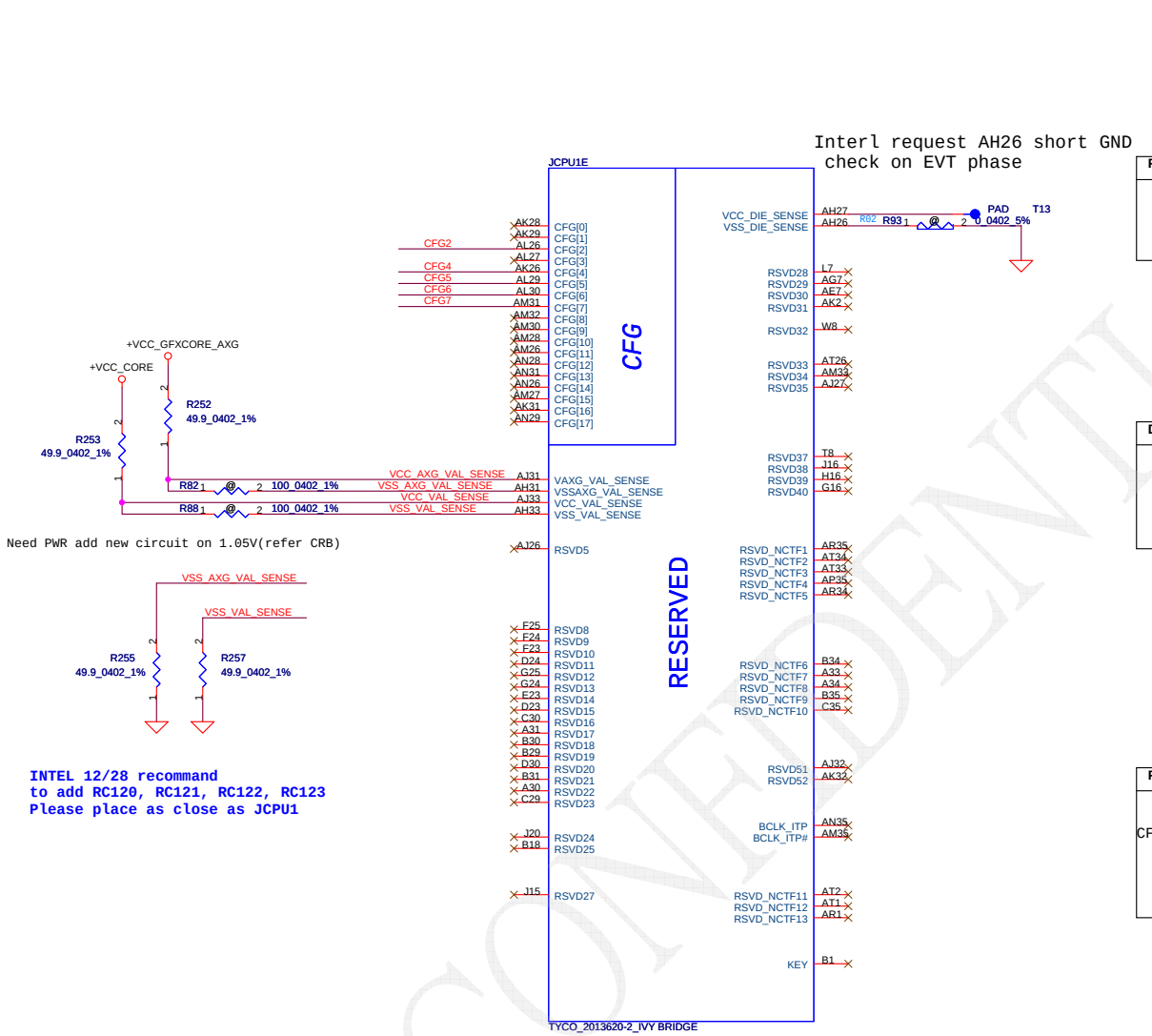

Interl request AH26 short GND check on EVT phase

Need PWR add new circuit on 1.05V(refer CRB)

INTEL 12/28 recommand to add RC120, RC121, RC122, RC123 Please place as close as JCPU1

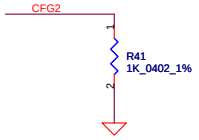

PEG Static Lane Reversal - CFG2 is for the 16x	
CFG2	1: Normal Operation; Lane # definition matches socket pin map definition * 0:Lane Reversed

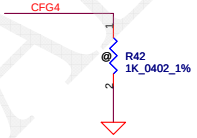

Display Port Presence Strap	
CFG4	* 1 : Disabled; No Physical Display Port attached to Embedded Display Port 0 : Enabled; An external Display Port device is connected to the Embedded Display Port

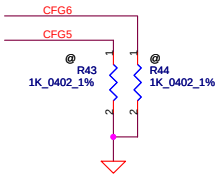

PCIE Port Bifurcation Straps	
CFG[6:5]	*11: (Default) x16 - Device 1 functions 1 and 2 disabled 10: x8, x8 - Device 1 function 1 enabled ; function 2 disabled 01: Reserved - (Device 1 function 1 disabled ; function 2 enabled) 00: x8,x4,x4 - Device 1 functions 1 and 2 enabled

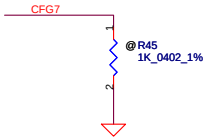

PEG DEFER TRAINING	
CFG7	1: (Default) PEG Train immediately following xxRESETB de assertion 0: PEG Wait for BIOS for training

CONFIDENTIAL

Security Classification	Compal Secret Data		
Issued Date	2011/06/15	Deciphered Date	2012/07/11

THIS SHEET OF ENGINEERING DRAWING IS THE PROPRIETARY PROPERTY OF COMPAL ELECTRONICS, INC. AND CONTAINS CONFIDENTIAL AND TRADE SECRET INFORMATION. THIS SHEET MAY NOT BE TRANSFERRED FROM THE CUSTODY OF THE COMPETENT DIVISION OF R&D DEPARTMENT EXCEPT AS AUTHORIZED BY COMPAL ELECTRONICS, INC. NEITHER THIS SHEET NOR THE INFORMATION IT CONTAINS MAY BE USED BY OR DISCLOSED TO ANY THIRD PARTY WITHOUT PRIOR WRITTEN CONSENT OF COMPAL ELECTRONICS, INC.

Compal Electronics, Inc.

Title: SCHEMATICS,MB A9061

Size: Custom | Document Number: 4019K3 | Rev: C

Date: Monday, December 17, 2012 | Sheet 8 of 63

POWER

JCPU1F

+VCC_CORE

QC=94A
DC=53A

+V1.05S_VCCP

8.5A

CORE SUPPLY

AG35	VCC1
AG34	VCC2
AG33	VCC3
AG32	VCC4
AG31	VCC5
AG30	VCC6
AG29	VCC7
AG28	VCC8
AG27	VCC9
AG26	VCC10
AF35	VCC11
AF34	VCC12
AF33	VCC13
AF32	VCC14
AF31	VCC15
AF30	VCC16
AF29	VCC17
AF28	VCC18
AF27	VCC19
AF26	VCC20
AD35	VCC21
AD34	VCC22
AD33	VCC23
AD32	VCC24
AD31	VCC25
AD30	VCC26
AD29	VCC27
AD28	VCC28
AD27	VCC29
AD26	VCC30
AC35	VCC31
AC34	VCC32
AC33	VCC33
AC32	VCC34
AC31	VCC35
AC30	VCC36
AC29	VCC37
AC28	VCC38
AC27	VCC39
AC26	VCC40
AA35	VCC41
AA34	VCC42
AA33	VCC43
AA32	VCC44
AA31	VCC45
AA30	VCC46
AA29	VCC47
AA28	VCC48
AA27	VCC49
AA26	VCC50
Y35	VCC51
Y34	VCC52
Y33	VCC53
Y32	VCC54
Y31	VCC55
Y30	VCC56
Y29	VCC57
Y28	VCC58
Y27	VCC59
Y26	VCC60
V35	VCC61
V34	VCC62
V33	VCC63
V32	VCC64
V31	VCC65
V30	VCC66
V29	VCC67
V28	VCC68
V26	VCC69
V27	VCC70
U35	VCC71
U34	VCC72
U33	VCC73
U32	VCC74
U31	VCC75
U30	VCC76
U29	VCC77
U28	VCC78
U27	VCC79
U26	VCC80
R35	VCC81
R34	VCC82
R33	VCC83
R32	VCC84
R31	VCC85
R30	VCC86
R29	VCC87
R28	VCC88
R27	VCC89
R26	VCC90
P35	VCC91
P34	VCC92
P33	VCC93
P32	VCC94
P31	VCC95
P30	VCC96
P29	VCC97
P28	VCC98
P27	VCC99
P26	VCC100

PEG AND DDR

VCCIO1	AH13
VCCIO2	AH10
VCCIO3	AG10
VCCIO4	AC10
VCCIO5	Y10
VCCIO6	U10
VCCIO7	P10
VCCIO8	L10
VCCIO9	J14
VCCIO10	J13
VCCIO11	J12
VCCIO12	J11
VCCIO13	H14
VCCIO14	H12
VCCIO15	H11
VCCIO16	G14
VCCIO17	G13
VCCIO18	G12
VCCIO19	F14
VCCIO20	F13
VCCIO21	F12
VCCIO22	F11
VCCIO23	E14
VCCIO24	E12
VCCIO25	E11
VCCIO26	D14
VCCIO27	D13
VCCIO28	D12
VCCIO29	D11
VCCIO30	C14
VCCIO31	C13
VCCIO32	C12
VCCIO33	C11
VCCIO34	B14
VCCIO35	B12
VCCIO36	A14
VCCIO37	A13
VCCIO38	A12
VCCIO39	A11
VCCIO40	J23

SVID

VIDALERT#	AJ29	H_CPU_SVIDALRT#	R47	43_0402_5%	VR_SVID_ALRT# [55]
VIDSCLK	AJ30	H_CPU_SVIDCLK	R02 R48	0_0402_5%	VR_SVID_CLK [55]
VIDSOUT	AJ28	H_CPU_SVIDDAT	R02 R49	0_0402_5%	VR_SVID_DAT [55]

+V1.05S_VCCP

C99
0.1U_0402_16V7K

R46
75_0402_5%

VR_SVID_CLK series-resistors close to VR

R50 130_0402_5% +V1.05S_VCCP 0.1uF on power side

VCC_SENCE 100ohm +-1% pull-up to VCC near processor

SENSE LINES

Trace Impedance =27-33 ohm
Trace Length Matc < 25 mils

+VCC_CORE

R51
100_0402_1%

VCC_SENSE	AJ35	VCCSENSE_R	R02 R52	0_0402_5%
VSS_SENSE	AJ34	VSSSENSE_R	R02 R53	0_0402_5%

VCCSENSE [55]
VSSSENSE [55]

VCCIO_SENSE	B10		
VSS_SENSE_VCCIO	A10	VSSIO_SENSE_L	VSSIO_SENSE

R74
10_0402_1%

R74 & R79 put together

VCCIO_SENSE [53]

R66
100_0402_1%

R54
100_0402_1%

+V1.05S_VCCP

R79
10_0402_1%

VSSIO_SENSE_L [53]

VSS_SENCE 100ohm +-1% pull-down to GND near processor

TYCO_2013620-2_IVY BRIDGE

CONFIDENTIAL

Security Classification	Compal Secret Data		
Issued Date	2011/06/15	Deciphered Date	2012/07/11

THIS SHEET OF ENGINEERING DRAWING IS THE PROPRIETARY PROPERTY OF COMPAL ELECTRONICS, INC. AND CONTAINS CONFIDENTIAL AND TRADE SECRET INFORMATION. THIS SHEET MAY NOT BE TRANSFERED FROM THE CUSTODY OF THE COMPETENT DIVISION OF R&D DEPARTMENT EXCEPT AS AUTHORIZED BY COMPAL ELECTRONICS, INC. NEITHER THIS SHEET NOR THE INFORMATION IT CONTAINS MAY BE USED BY OR DISCLOSED TO ANY THIRD PARTY WITHOUT PRIOR WRITTEN CONSENT OF COMPAL ELECTRONICS, INC.

Title: SCHEMATICS,MB A9061

Size: Custom | Document Number: 4019K3 | Rev: C

Date: Monday, December 17, 2012 | Sheet 9 of 63

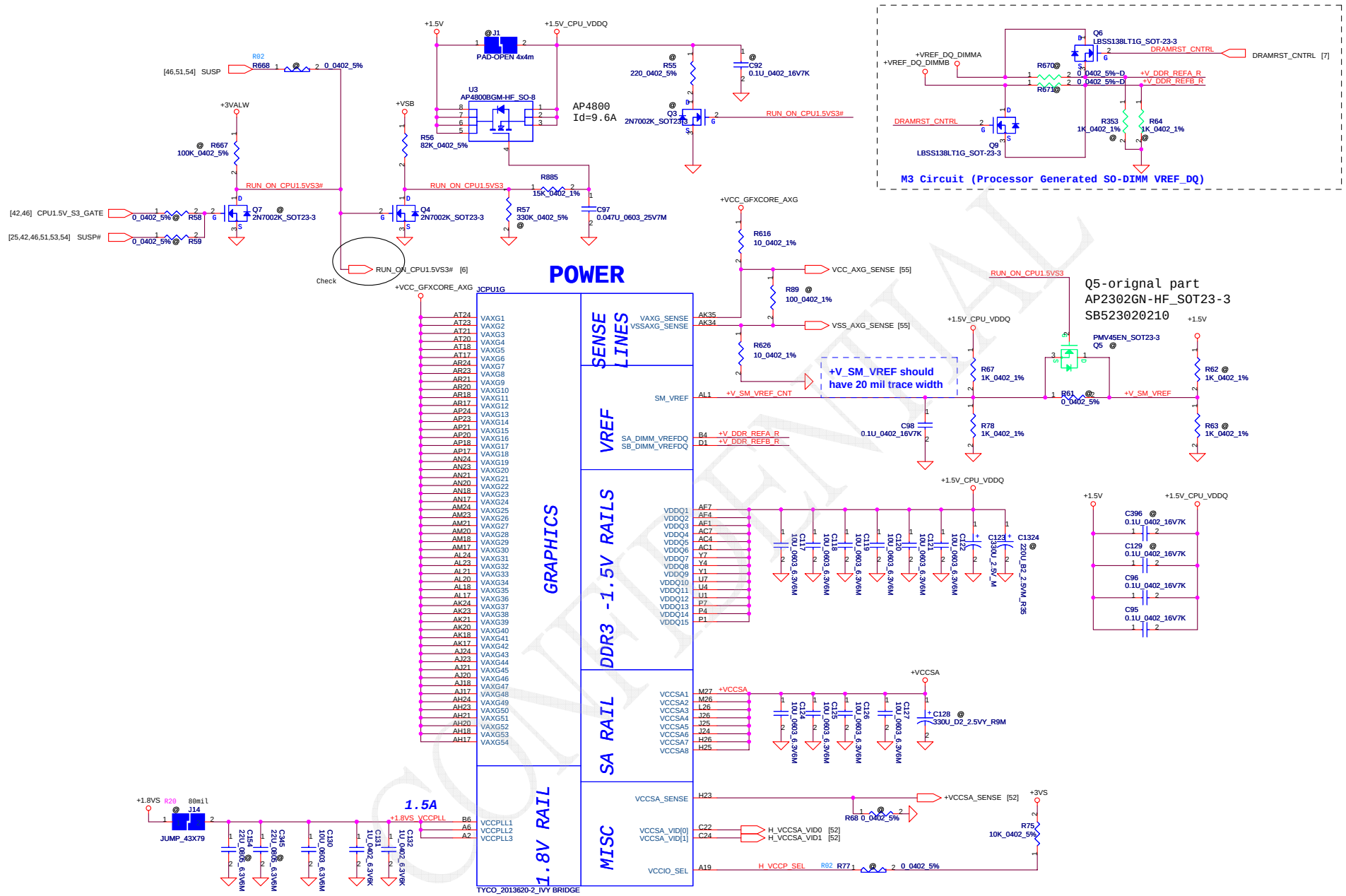

Security Classification	Compal Secret Data		
Issued Date	2011/06/15	Deciphered Date	2012/07/11

THIS SHEET OF ENGINEERING DRAWING IS THE PROPRIETARY PROPERTY OF COMPAL ELECTRONICS, INC. AND CONTAINS CONFIDENTIAL AND TRADE SECRET INFORMATION. THIS SHEET MAY NOT BE TRANSFERED FROM THE CUSTODY OF THE COMPETENT DIVISION OF R&D DEPARTMENT EXCEPT AS AUTHORIZED BY COMPAL ELECTRONICS, INC. NEITHER THIS SHEET NOR THE INFORMATION IT CONTAINS MAY BE USED BY OR DISCLOSED TO ANY THIRD PARTY WITHOUT PRIOR WRITTEN CONSENT OF COMPAL ELECTRONICS, INC.

Title: **SCHEMATICS,MB A9061**

Size: Custom | Document Number: **4019K3** | Rev: C

Date: Monday, December 17, 2012 | Sheet 10 of 63

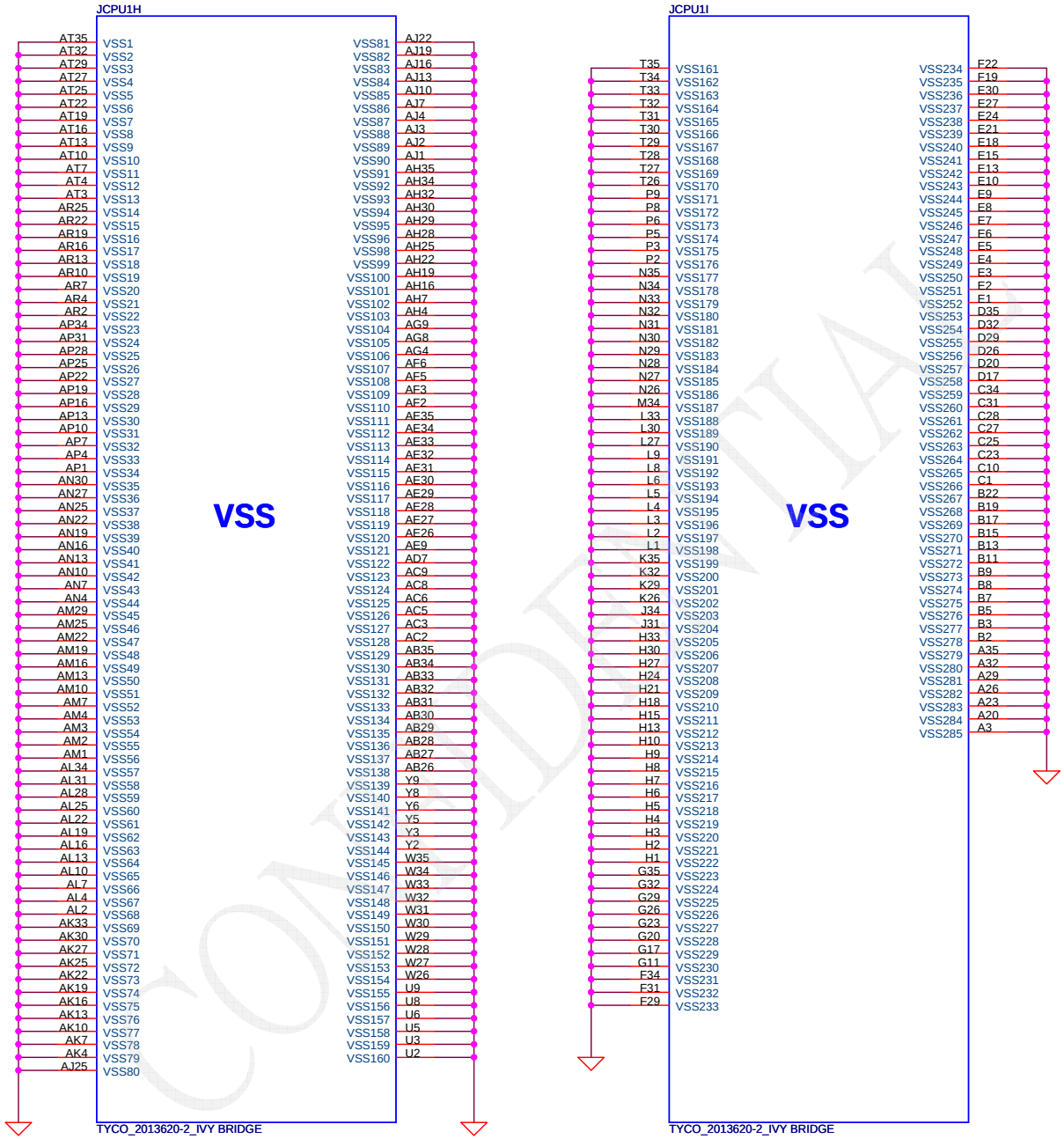

CONFIDENTIAL

Security Classification	Compal Secret Data		
Issued Date	2011/06/15	Deciphered Date	2012/07/11

THIS SHEET OF ENGINEERING DRAWING IS THE PROPRIETARY PROPERTY OF COMPAL ELECTRONICS, INC. AND CONTAINS CONFIDENTIAL AND TRADE SECRET INFORMATION. THIS SHEET MAY NOT BE TRANSFERED FROM THE CUSTODY OF THE COMPETENT DIVISION OF R&D DEPARTMENT EXCEPT AS AUTHORIZED BY COMPAL ELECTRONICS, INC. NEITHER THIS SHEET NOR THE INFORMATION IT CONTAINS MAY BE USED BY OR DISCLOSED TO ANY THIRD PARTY WITHOUT PRIOR WRITTEN CONSENT OF COMPAL ELECTRONICS, INC.

Compal Electronics, Inc.

Title: **SCHEMATICS,MB A9061**

Size: Custom | Document Number: **4019K3** | Rev: C

Date: Monday, December 17, 2012 | Sheet 11 of 63

DDR3 SO-DIMM A

JDIMM1

LCN_DAN06-K4806-0103

ME@

[7] DDR_A_D[0..63]
[7] DDR_A_DQS[0..7]
[7] DDR_A_DQS#[0..7]
[7] DDR_A_MA[0..15]

+VREF_DQ_DIMMA: R70 1K_0402_1%, R71 1K_0402_1%, C134 2.2U_0603_6.3V6K, C133 0.1U_0402_16V7K

+1.5V

DDR3_DRAMRST# [13,7]

[7] DDR_CKE0_DIMMA
[7] DDR_A_BS2
[7] M_CLK_DDR0
[7] M_CLK_DDR#0
[7] DDR_A_BS0
[7] DDR_A_WE#
[7] DDR_A_CAS#
[7] DDR_CS1_DIMMA#

DDR_CKE1_DIMMA [7]
M_CLK_DDR1 [7]
M_CLK_DDR#1 [7]
DDR_A_BS1 [7]
DDR_A_RAS# [7]
DDR_CS0_DIMMA# [7]
M_ODT0 [7]
M_ODT1 [7]

+VREF_CA: R72 1K_0402_1%, R73 1K_0402_1%, C135 0.1U_0402_16V7K, C136 2.2U_0603_6.3V6K

+3VS: C155 2.2U_0603_6.3V6K, C156 0.1U_0402_16V7K, R83 10K_0402_5%, R81 10K_0402_5%

SMB_DATA_S3 [13,15,36,43]
SMB_CLK_S3 [13,15,36,43]

+0.75VS

0.65A@0.75V

VDDQ(1.5V) =
3*330uf / 12m ohm (TOTAL FOR 2 SO-DIMMs)
6*0603 10uf (PER CONNECTOR)

VTT(0.75V) =
3*0805 10uf 4*0402 1uf

VREF =
1*0402 0.1uf 1*0402 2.2uf

VDDSPD (3.3V)=
1*0402 0.1uf 1*0402 2.2uf

OSCAN (220uF_6.3V_4.2L_ESR17m)*1=(SF000002Y00)
(10uF_0603_6.3V)*8
(0.1uF_402_10V)*4

Layout Note:
Place near DIMM

C137 10U_0603_6.3V6M @, C138 10U_0603_6.3V6M @, C139 10U_0603_6.3V6M, C140 10U_0603_6.3V6M, C141 10U_0603_6.3V6M, C142 10U_0603_6.3V6M, C143 10U_0603_6.3V6M, C144 10U_0603_6.3V6M, C145 0.1U_0402_16V7K, C146 0.1U_0402_16V7K, C147 0.1U_0402_16V7K, C148 0.1U_0402_16V7K, C149 @ 220U_6.3V_M

EVT Check

Layout Note:
Place near DIMM

C150 1U_0402_6.3V6K, C151 @ 1U_0402_6.3V6K, C152 1U_0402_6.3V6K, C153 @ 1U_0402_6.3V6K

7/28 Update connect GND directly

DDR_A_DM0, DDR_A_DM1, DDR_A_DM2, DDR_A_DM3, DDR_A_DM4, DDR_A_DM5, DDR_A_DM6, DDR_A_DM7

Layout Note:
Place near DIMM

CONFIDENTIAL

Security Classification	Compal Secret Data		
Issued Date	2011/06/15	Deciphered Date	2012/07/11

THIS SHEET OF ENGINEERING DRAWING IS THE PROPRIETARY PROPERTY OF COMPAL ELECTRONICS, INC. AND CONTAINS CONFIDENTIAL AND TRADE SECRET INFORMATION. THIS SHEET MAY NOT BE TRANSFERED FROM THE CUSTODY OF THE COMPETENT DIVISION OF R&D DEPARTMENT EXCEPT AS AUTHORIZED BY COMPAL ELECTRONICS, INC. NEITHER THIS SHEET NOR THE INFORMATION IT CONTAINS MAY BE USED BY OR DISCLOSED TO ANY THIRD PARTY WITHOUT PRIOR WRITTEN CONSENT OF COMPAL ELECTRONICS, INC.

Compal Electronics, Inc.

Title: SCHEMATICS,MB A9061

Size: Custom | Document Number: 4019K3 | Rev: C

Date: Monday, December 17, 2012 | Sheet 12 of 63

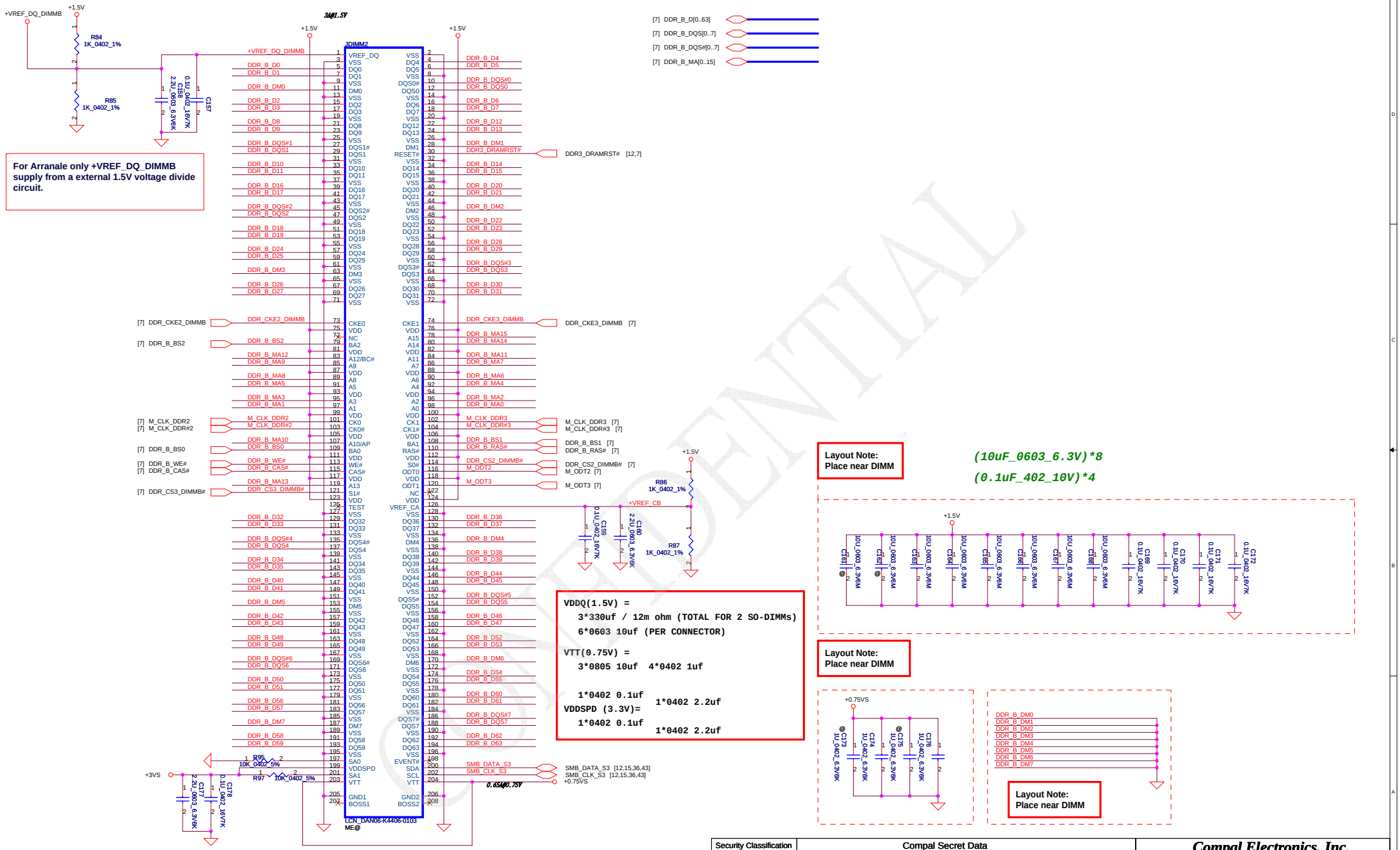

Layout Note:
Place near DIMM

*(10uF_0603_6.3V)*8*

*(0.1uF_402_10V)*4*

Layout Note:
Place near DIMM

Layout Note:
Place near DIMM

```
VDDQ(1.5V) =
   3*330uf / 12m ohm (TOTAL FOR 2 SO-DIMMs)
   6*0603 10uf (PER CONNECTOR)

VTT(0.75V) =
   3*0805 10uf  4*0402 1uf

   1*0402 0.1uf     1*0402 2.2uf
VDDSPD (3.3V)=
   1*0402 0.1uf
                    1*0402 2.2uf
```

CONFIDENTIAL

Security Classification	Compal Secret Data		
Issued Date	2011/06/15	Deciphered Date	2012/07/11

THIS SHEET OF ENGINEERING DRAWING IS THE PROPRIETARY PROPERTY OF COMPAL ELECTRONICS, INC. AND CONTAINS CONFIDENTIAL AND TRADE SECRET INFORMATION. THIS SHEET MAY NOT BE TRANSFERED FROM THE CUSTODY OF THE COMPETENT DIVISION OF R&D DEPARTMENT EXCEPT AS AUTHORIZED BY COMPAL ELECTRONICS, INC. NEITHER THIS SHEET NOR THE INFORMATION IT CONTAINS MAY BE USED BY OR DISCLOSED TO ANY THIRD PARTY WITHOUT PRIOR WRITTEN CONSENT OF COMPAL ELECTRONICS, INC.

Compal Electronics, Inc.

Title: **SCHEMATICS,MB A9061**

Size | Document Number: **4019K3** | Rev: C

Date: Monday, December 17, 2012 | Sheet 13 of 63

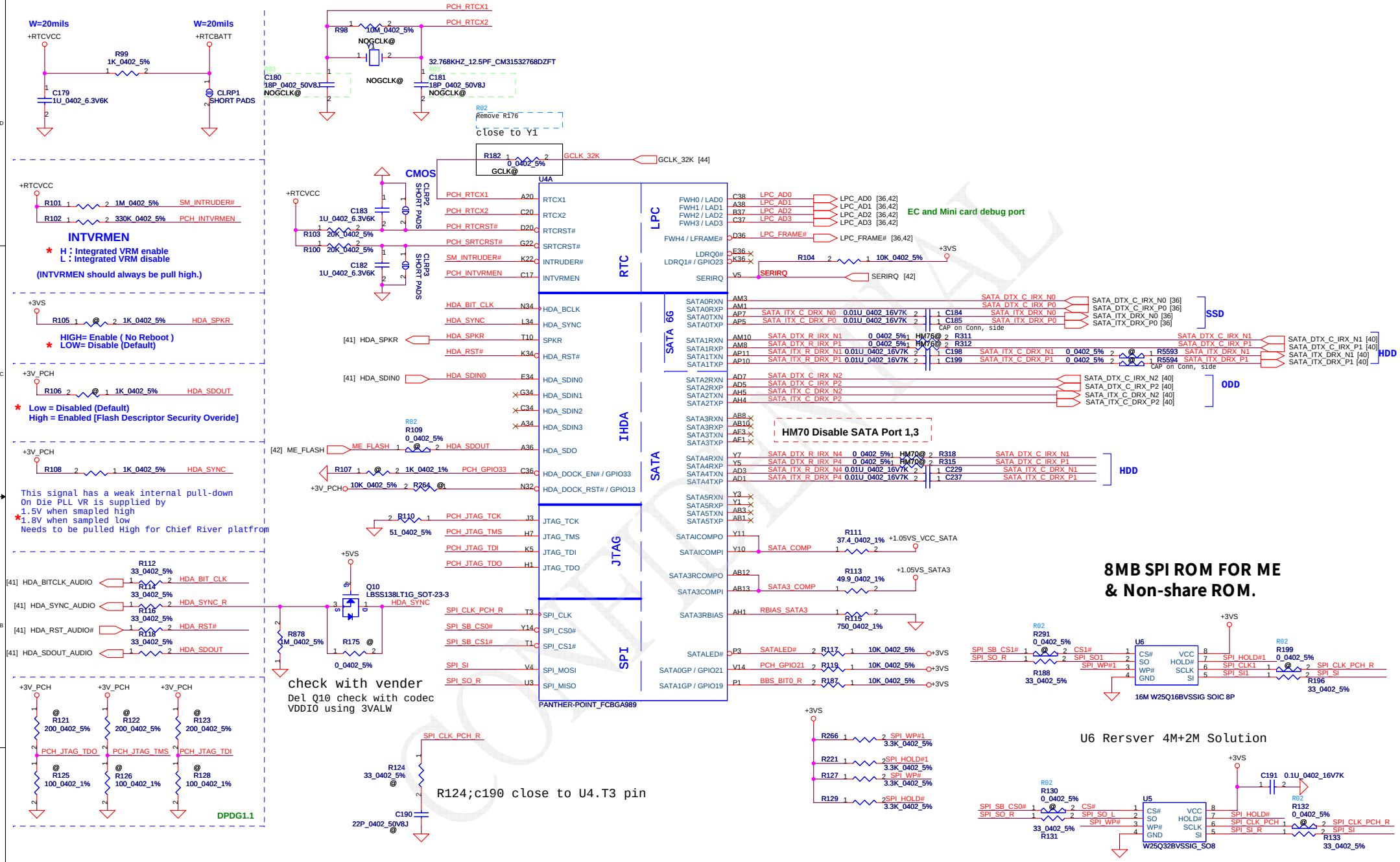

Security Classification	Compal Secret Data		
Issued Date	2011/06/15	Deciphered Date	2012/07/11

THIS SHEET OF ENGINEERING DRAWING IS THE PROPRIETARY PROPERTY OF COMPAL ELECTRONICS, INC. AND CONTAINS CONFIDENTIAL AND TRADE SECRET INFORMATION. THIS SHEET MAY NOT BE TRANSFERED FROM THE CUSTODY OF THE COMPETENT DIVISION OF R&D DEPARTMENT EXCEPT AS AUTHORIZED BY COMPAL ELECTRONICS, INC. NEITHER THIS SHEET NOR THE INFORMATION IT CONTAINS MAY BE USED BY OR DISCLOSED TO ANY THIRD PARTY WITHOUT PRIOR WRITTEN CONSENT OF COMPAL ELECTRONICS, INC.

Compal Electronics, Inc.

Title: SCHEMATICS,MB A9061

Size: Custom | Document Number: 4019K3 | Rev: C

Date: Monday, December 17, 2012 | Sheet 14 of 63

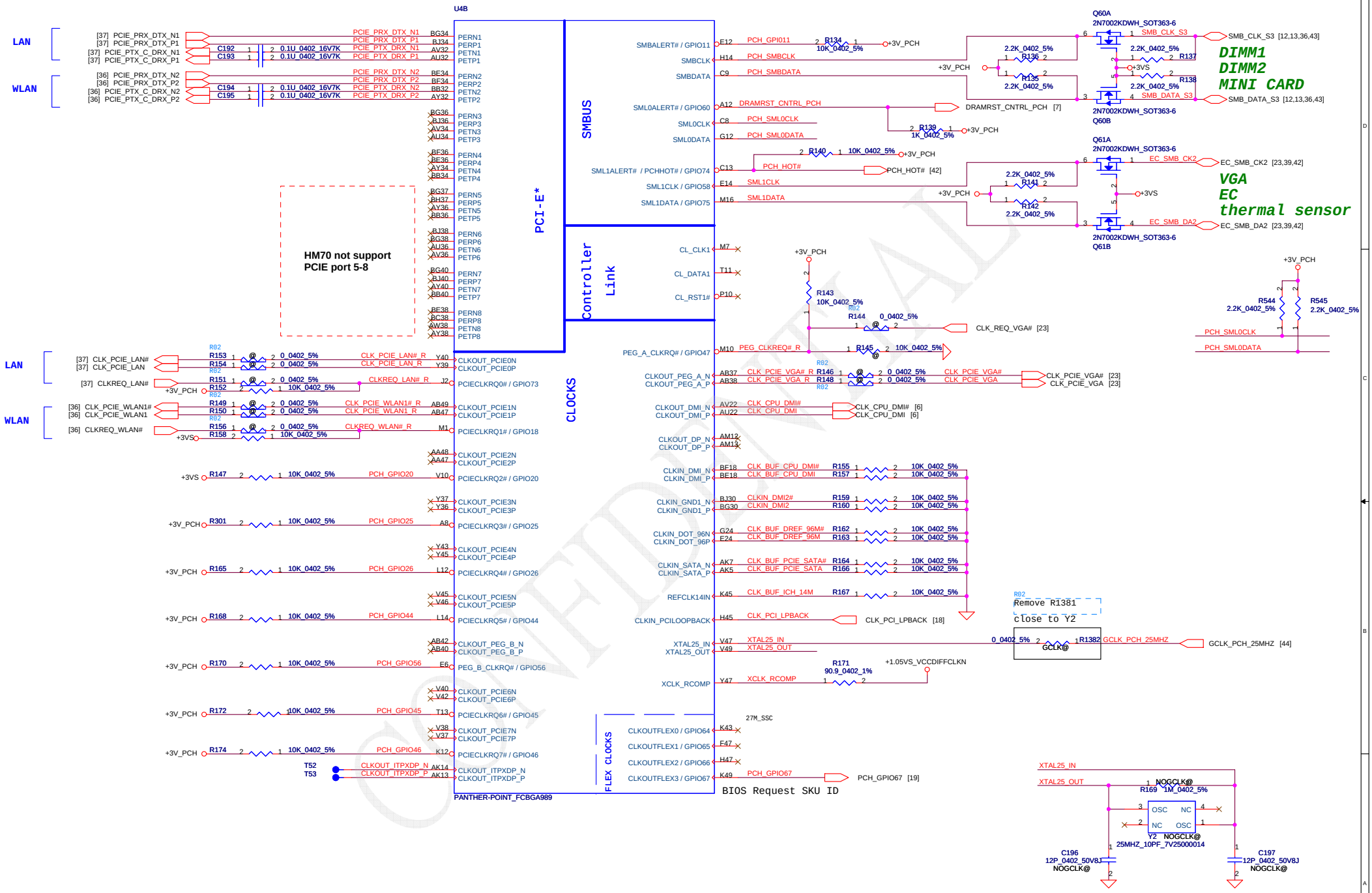

Security Classification	Compal Secret Data		
Issued Date	2011/06/15	Deciphered Date	2012/07/11

THIS SHEET OF ENGINEERING DRAWING IS THE PROPRIETARY PROPERTY OF COMPAL ELECTRONICS, INC. AND CONTAINS CONFIDENTIAL AND TRADE SECRET INFORMATION. THIS SHEET MAY NOT BE TRANSFERRED FROM THE CUSTODY OF THE COMPETENT DIVISION OF R&D DEPARTMENT EXCEPT AS AUTHORIZED BY COMPAL ELECTRONICS, INC. NEITHER THIS SHEET NOR THE INFORMATION IT CONTAINS MAY BE USED BY OR DISCLOSED TO ANY THIRD PARTY WITHOUT PRIOR WRITTEN CONSENT OF COMPAL ELECTRONICS, INC.

Compal Electronics, Inc.

Title: SCHEMATICS,MB A9061

Size: Custom | Document Number: 4019K3 | Rev: C

Date: Monday, December 17, 2012 | Sheet 15 of 63

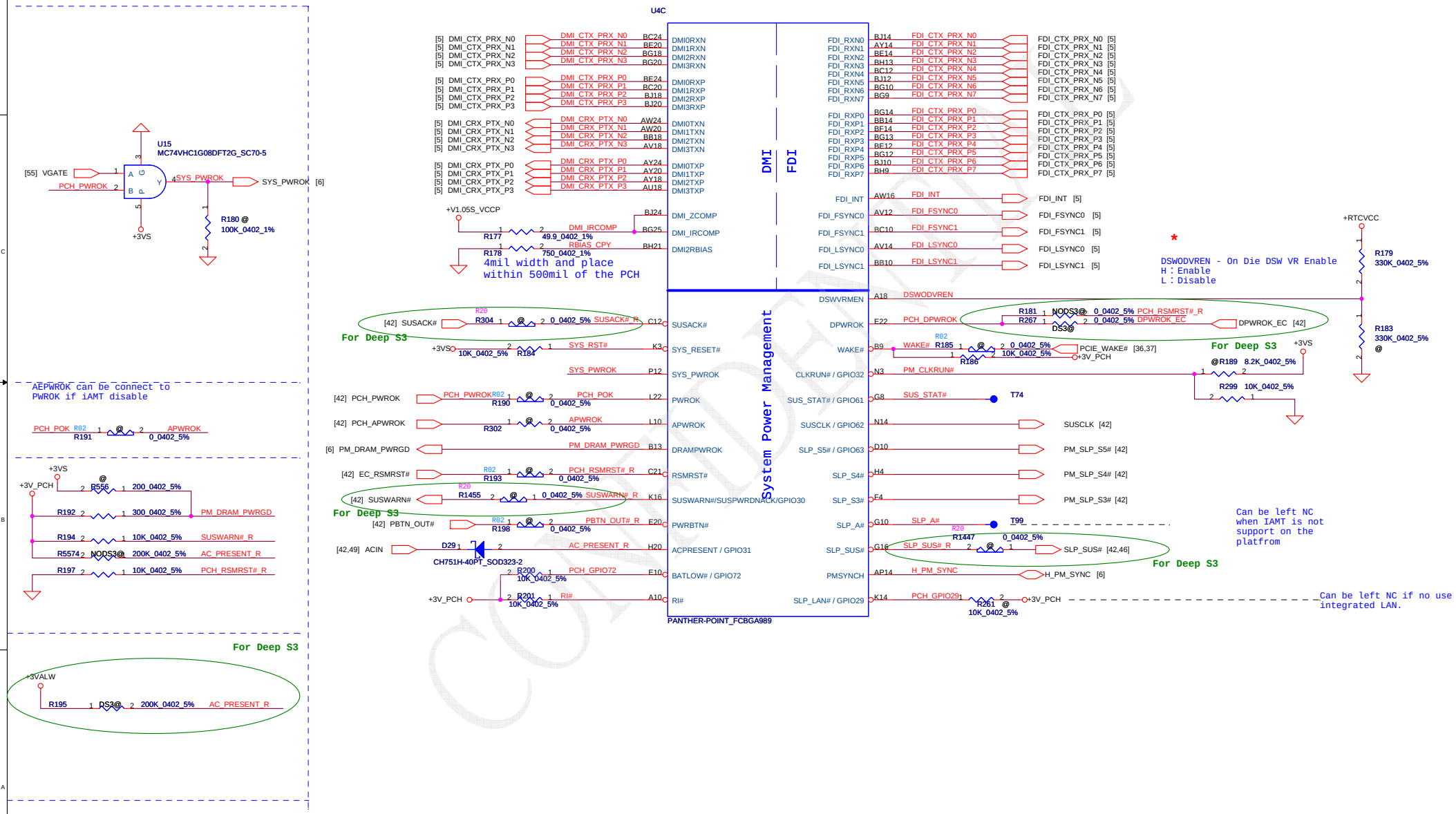

Security Classification	Compal Secret Data		
Issued Date	2011/06/15	Deciphered Date	2012/07/11

THIS SHEET OF ENGINEERING DRAWING IS THE PROPRIETARY PROPERTY OF COMPAL ELECTRONICS, INC. AND CONTAINS CONFIDENTIAL AND TRADE SECRET INFORMATION. THIS SHEET MAY NOT BE TRANSFERED FROM THE CUSTODY OF THE COMPETENT DIVISION OF R&D DEPARTMENT EXCEPT AS AUTHORIZED BY COMPAL ELECTRONICS, INC. NEITHER THIS SHEET NOR THE INFORMATION IT CONTAINS MAY BE USED BY OR DISCLOSED TO ANY THIRD PARTY WITHOUT PRIOR WRITTEN CONSENT OF COMPAL ELECTRONICS, INC.

Compal Electronics, Inc.

Title: **SCHEMATICS,MB A9061**

Size: Custom | Document Number: **4019K3** | Rev: C

Date: Monday, December 17, 2012 | Sheet 16 of 63

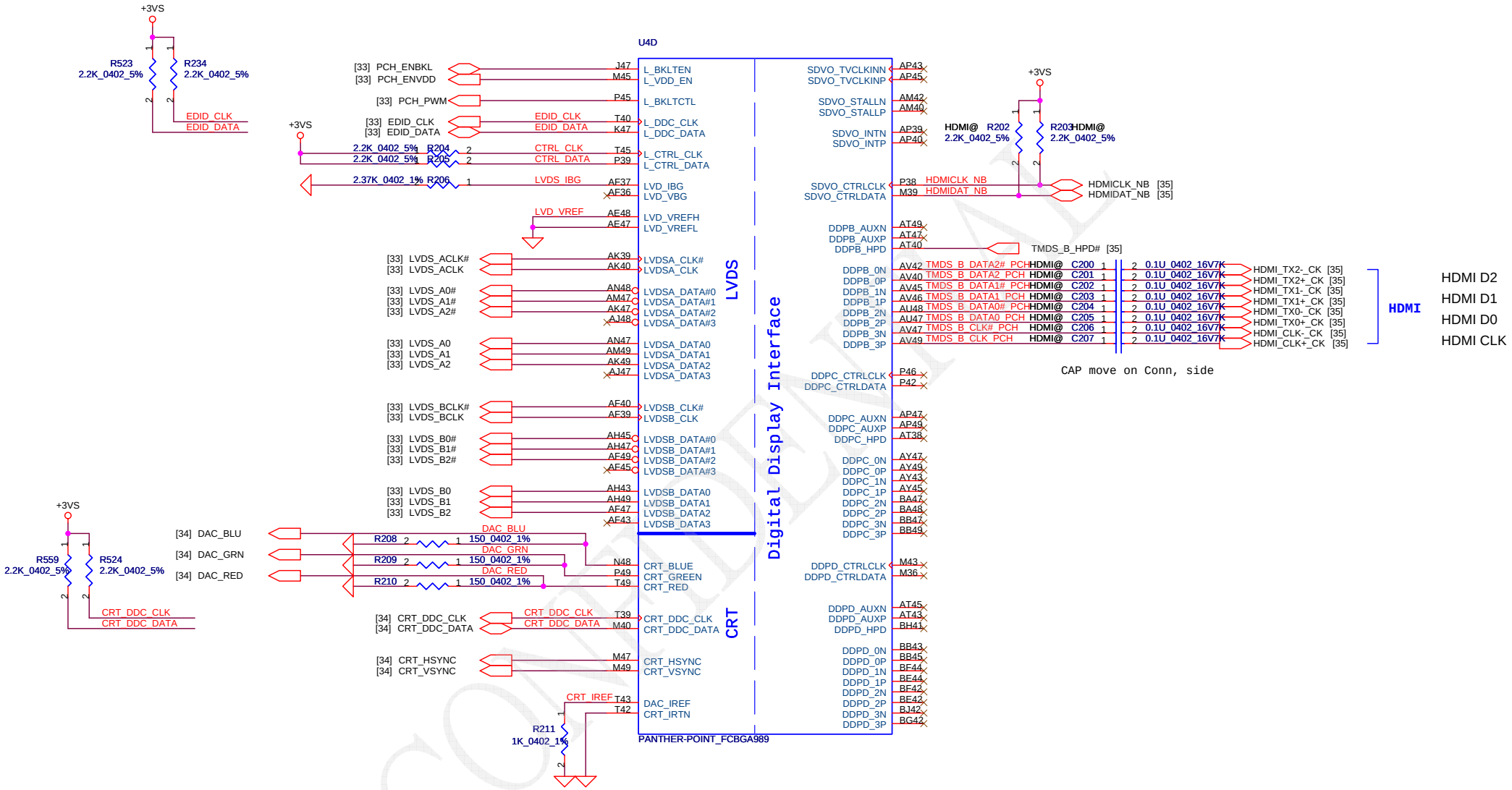

CONFIDENTIAL

Security Classification	Compal Secret Data		
Issued Date	2011/06/15	Deciphered Date	2012/07/11

THIS SHEET OF ENGINEERING DRAWING IS THE PROPRIETARY PROPERTY OF COMPAL ELECTRONICS, INC. AND CONTAINS CONFIDENTIAL AND TRADE SECRET INFORMATION. THIS SHEET MAY NOT BE TRANSFERED FROM THE CUSTODY OF THE COMPETENT DIVISION OF R&D DEPARTMENT EXCEPT AS AUTHORIZED BY COMPAL ELECTRONICS, INC. NEITHER THIS SHEET NOR THE INFORMATION IT CONTAINS MAY BE USED BY OR DISCLOSED TO ANY THIRD PARTY WITHOUT PRIOR WRITTEN CONSENT OF COMPAL ELECTRONICS, INC.

Title: **SCHEMATICS,MB A9061**

Size: B | Document Number: **4019K3** | Rev: C

Date: Monday, December 17, 2012 | Sheet 17 of 63

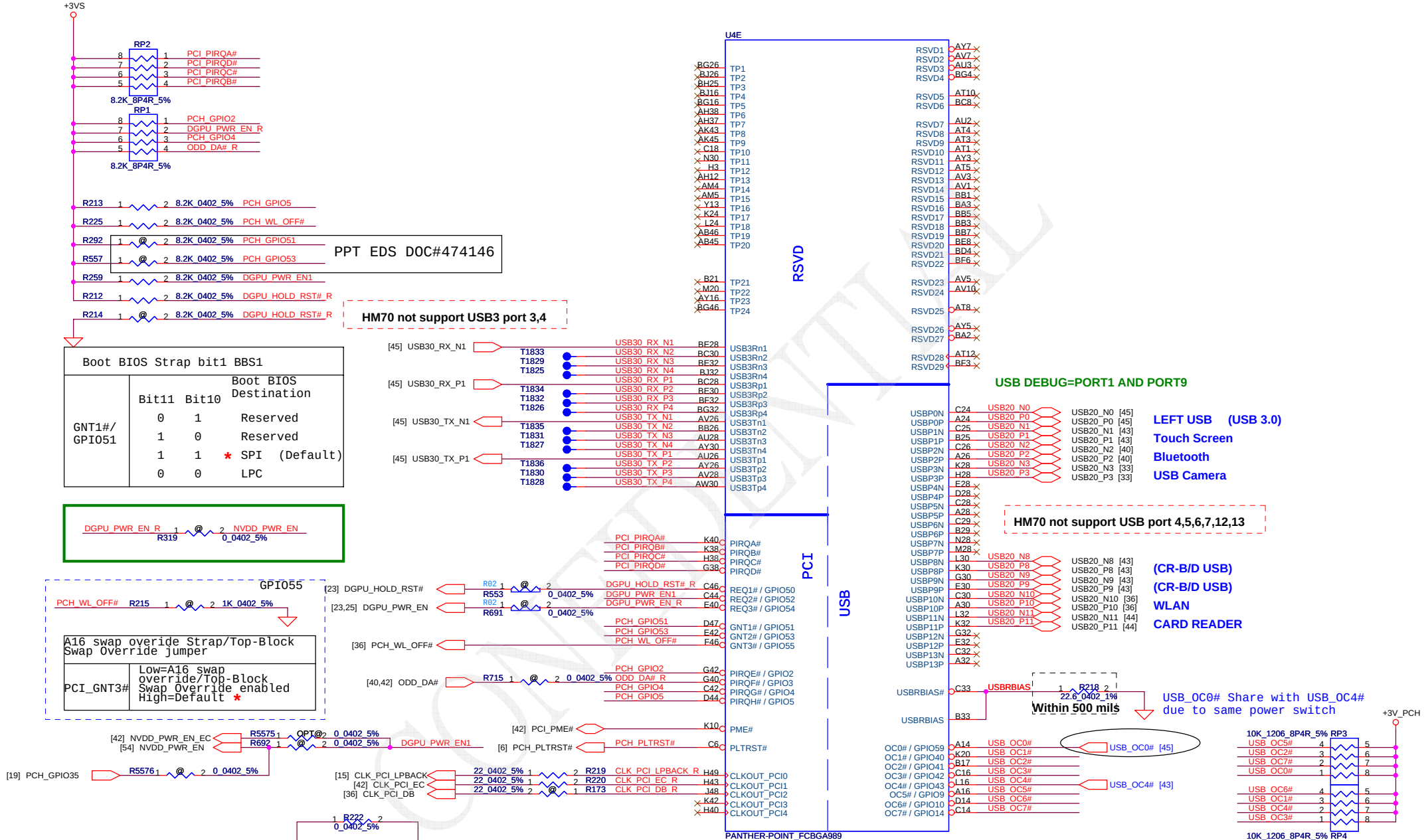

Security Classification	Compal Secret Data		
Issued Date	2011/06/15	Deciphered Date	2012/07/11

THIS SHEET OF ENGINEERING DRAWING IS THE PROPRIETARY PROPERTY OF COMPAL ELECTRONICS, INC. AND CONTAINS CONFIDENTIAL AND TRADE SECRET INFORMATION. THIS SHEET MAY NOT BE TRANSFERED FROM THE CUSTODY OF THE COMPETENT DIVISION OF R&D DEPARTMENT EXCEPT AS AUTHORIZED BY COMPAL ELECTRONICS, INC. NEITHER THIS SHEET NOR THE INFORMATION IT CONTAINS MAY BE USED BY OR DISCLOSED TO ANY THIRD PARTY WITHOUT PRIOR WRITTEN CONSENT OF COMPAL ELECTRONICS, INC.

Title: **SCHEMATICS,MB A9061**

Size: Custom | Document Number: **4019K3** | Rev: C

Date: Monday, December 17, 2012 | Sheet 18 of 63

PCH_GPIO69	Function
0	HM76 by PCH
1	HM70 by PCH

PCH_GPIO70	Function
0	14/15"
1	17"

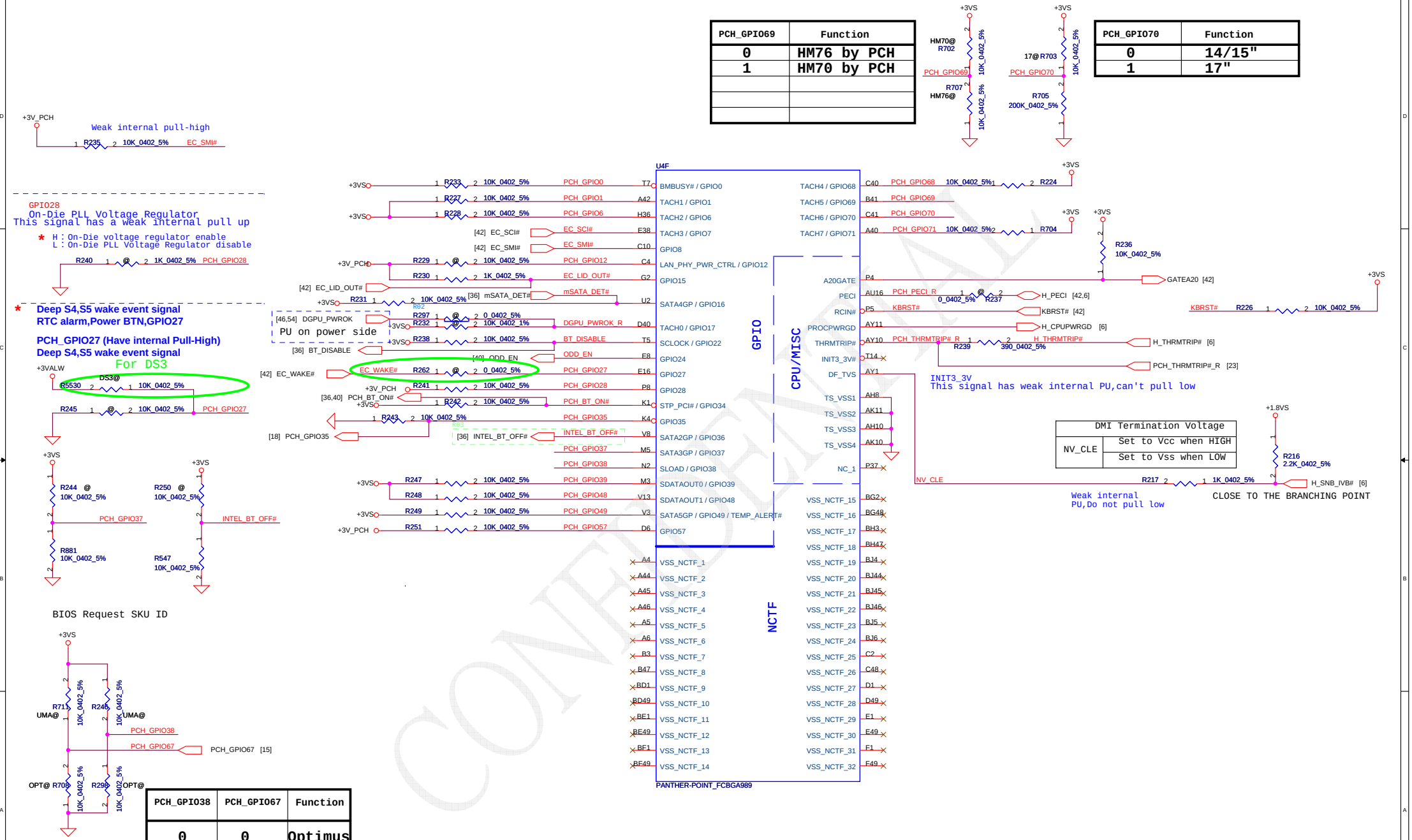

PCH_GPIO38	PCH_GPIO67	Function
0	0	Optimus
1	1	UMA

CONFIDENTIAL

Security Classification	Compal Secret Data		
Issued Date	2011/06/15	Deciphered Date	2012/07/11

THIS SHEET OF ENGINEERING DRAWING IS THE PROPRIETARY PROPERTY OF COMPAL ELECTRONICS, INC. AND CONTAINS CONFIDENTIAL AND TRADE SECRET INFORMATION. THIS SHEET MAY NOT BE TRANSFERED FROM THE CUSTODY OF THE COMPETENT DIVISION OF R&D DEPARTMENT EXCEPT AS AUTHORIZED BY COMPAL ELECTRONICS, INC. NEITHER THIS SHEET NOR THE INFORMATION IT CONTAINS MAY BE USED BY OR DISCLOSED TO ANY THIRD PARTY WITHOUT PRIOR WRITTEN CONSENT OF COMPAL ELECTRONICS, INC.

Compal Electronics, Inc.

Title: SCHEMATICS,MB A9061

Size: Custom | Document Number: 4019K3 | Rev: C

Date: Monday, December 17, 2012 | Sheet 19 of 63

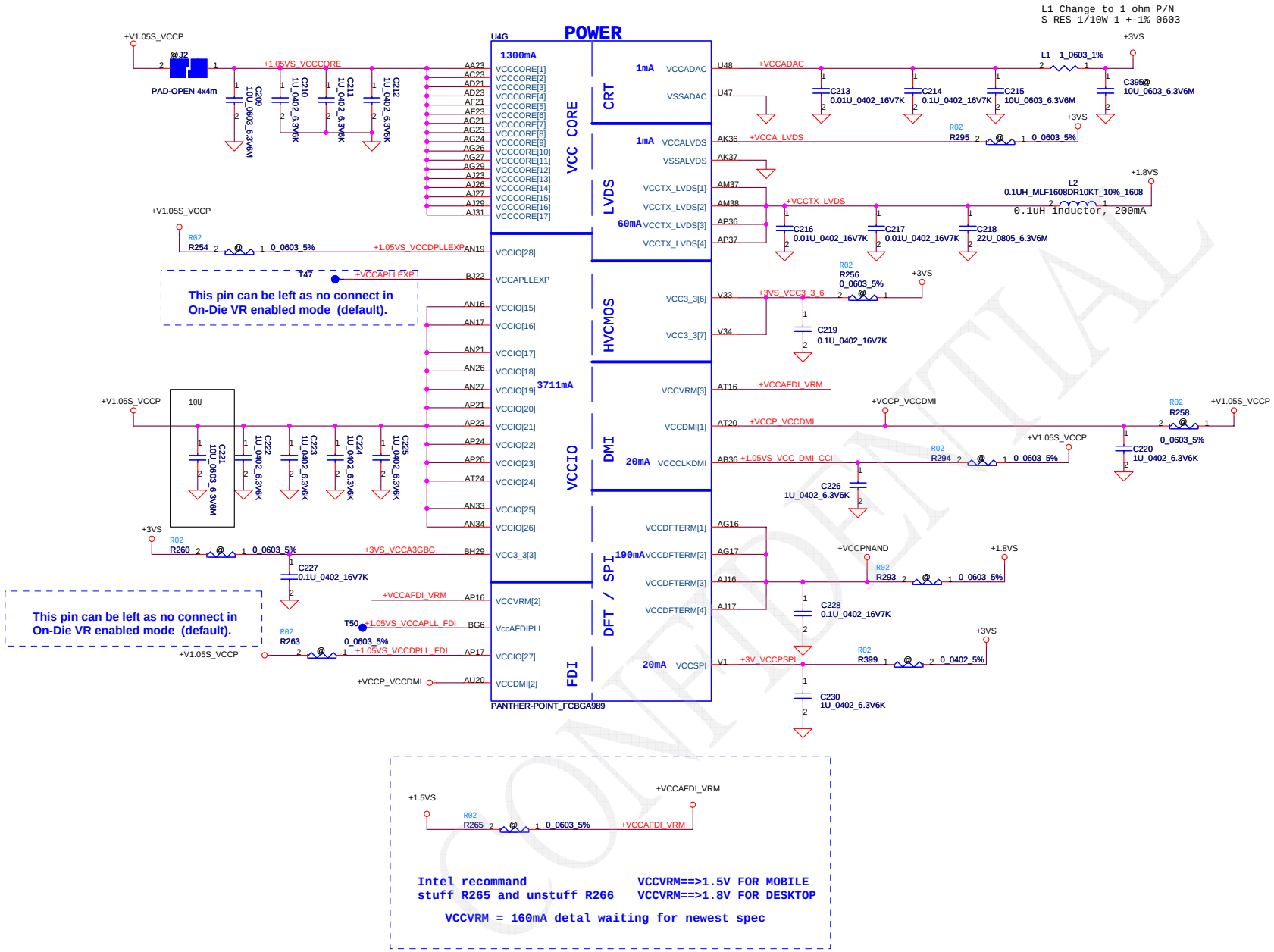

PCH Power Rail Table
Refer to CPU EDS R1.5

Voltage Rail	Voltage	S0 Iccmax Current (A)
V_PROC_IO	1.05	0.001
V5REF	5	0.001
V5REF_Sus	5	0.001
Vcc3_3	3.3	0.228
VccADAC	3.3	0.001
VccADPLLA	1.05	0.075
VccADPLLB	1.05	0.075
VccCore	1.05	1.3
VccDMI	1.05	0.042
VccIO	1.05	3.709
VccASW	1.05	0.903
VccSPI	3.3	0.01
VccDSW	3.3	0.001
VccDFTERM	1.8	0.002
VccRTC	3.3	6 uA
VccSus3_3	3.3	0.065
VccSusHDA	3.3 / 1.5	0.01
VccVRM	1.8 / 1.5	0.167
VccCLKDMI	1.05	0.075
VccSSC	1.05	0.095
VccDIFFCLKN	1.05	0.055
VccALVDS	3.3	0.001
VccTX_LVDS	1.8	0.04

CONFIDENTIAL

Security Classification	Compal Secret Data		
Issued Date	2011/06/15	Deciphered Date	2012/07/11

THIS SHEET OF ENGINEERING DRAWING IS THE PROPRIETARY PROPERTY OF COMPAL ELECTRONICS, INC. AND CONTAINS CONFIDENTIAL AND TRADE SECRET INFORMATION. THIS SHEET MAY NOT BE TRANSFERED FROM THE CUSTODY OF THE COMPETENT DIVISION OF R&D DEPARTMENT EXCEPT AS AUTHORIZED BY COMPAL ELECTRONICS, INC. NEITHER THIS SHEET NOR THE INFORMATION IT CONTAINS MAY BE USED BY OR DISCLOSED TO ANY THIRD PARTY WITHOUT PRIOR WRITTEN CONSENT OF COMPAL ELECTRONICS, INC.

Compal Electronics, Inc.

Title: SCHEMATICS,MB A9061

Size: Custom | Document Number: 4019K3 | Rev: C

Date: Monday, December 17, 2012 | Sheet 20 of 63

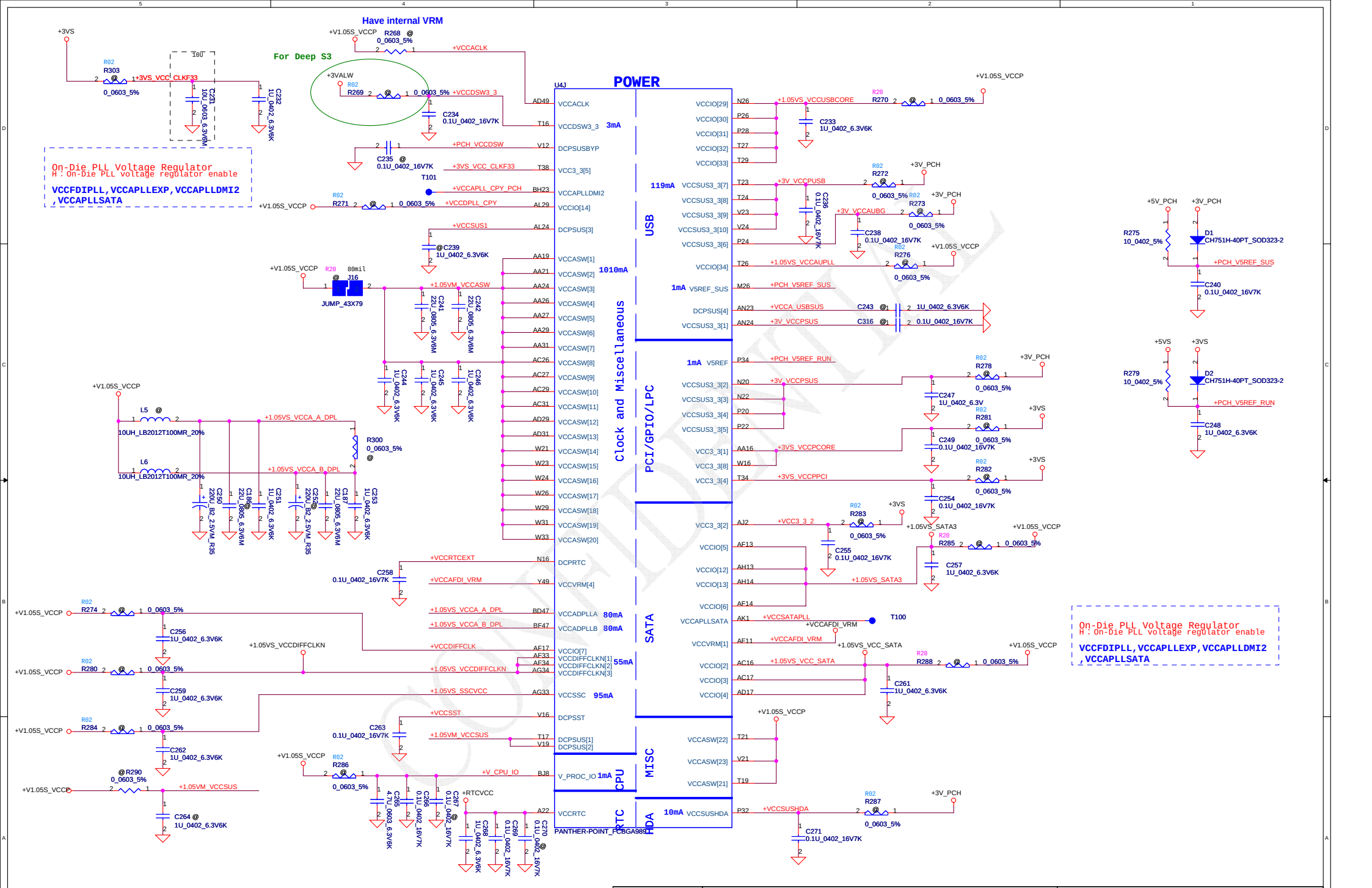

Security Classification	Compal Secret Data		
Issued Date	2011/06/15	Deciphered Date	2012/07/11

THIS SHEET OF ENGINEERING DRAWING IS THE PROPRIETARY PROPERTY OF COMPAL ELECTRONICS, INC. AND CONTAINS CONFIDENTIAL AND TRADE SECRET INFORMATION. THIS SHEET MAY NOT BE TRANSFERED FROM THE CUSTODY OF THE COMPETENT DIVISION OF R&D DEPARTMENT EXCEPT AS AUTHORIZED BY COMPAL ELECTRONICS, INC. NEITHER THIS SHEET NOR THE INFORMATION IT CONTAINS MAY BE USED BY OR DISCLOSED TO ANY THIRD PARTY WITHOUT PRIOR WRITTEN CONSENT OF COMPAL ELECTRONICS, INC.

Title: **Compal Electronics, Inc.**
SCHEMATICS,MB A9061

Size: Custom | Document Number: **4019K3** | Rev: C

Date: Monday, December 17, 2012 | Sheet 21 of 63

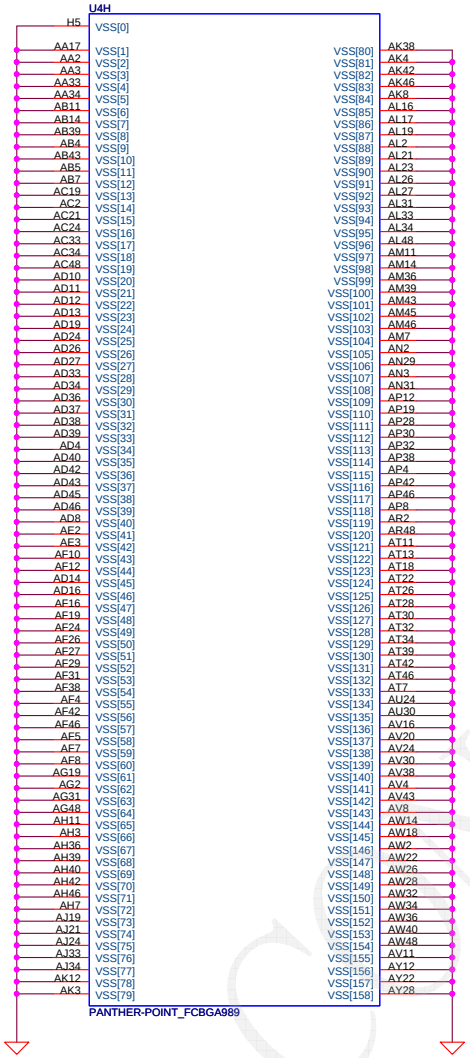

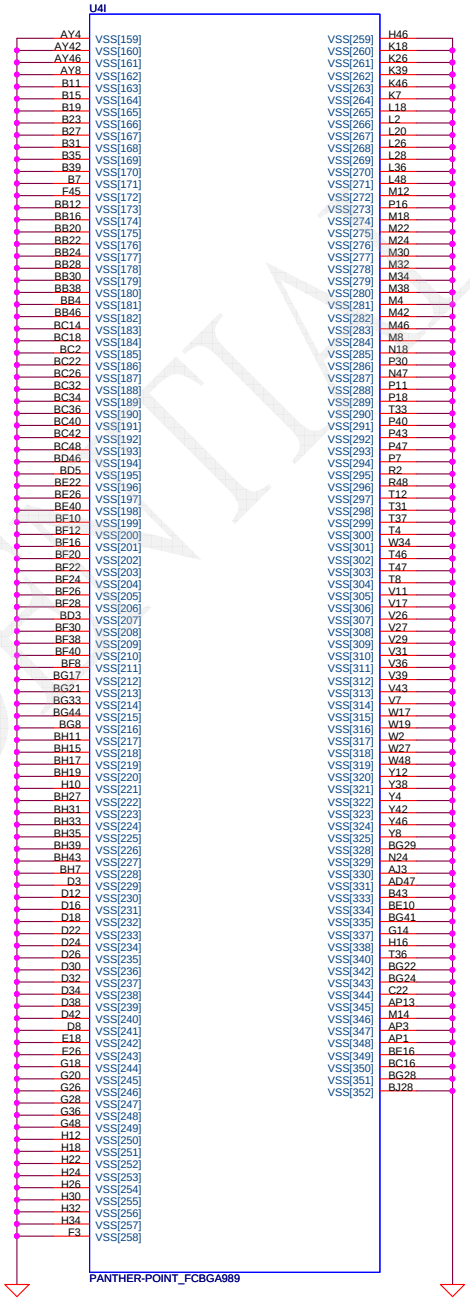

CONFIDENTIAL

Security Classification	Compal Secret Data		
Issued Date	2011/06/15	Deciphered Date	2012/07/11

THIS SHEET OF ENGINEERING DRAWING IS THE PROPRIETARY PROPERTY OF COMPAL ELECTRONICS, INC. AND CONTAINS CONFIDENTIAL AND TRADE SECRET INFORMATION. THIS SHEET MAY NOT BE TRANSFERED FROM THE CUSTODY OF THE COMPETENT DIVISION OF R&D DEPARTMENT EXCEPT AS AUTHORIZED BY COMPAL ELECTRONICS, INC. NEITHER THIS SHEET NOR THE INFORMATION IT CONTAINS MAY BE USED BY OR DISCLOSED TO ANY THIRD PARTY WITHOUT PRIOR WRITTEN CONSENT OF COMPAL ELECTRONICS, INC.

Compal Electronics, Inc.

Title: SCHEMATICS,MB A9061

Size: Custom | Document Number: 4019K3 | Rev: C

Date: Monday, December 17, 2012 | Sheet 22 of 63

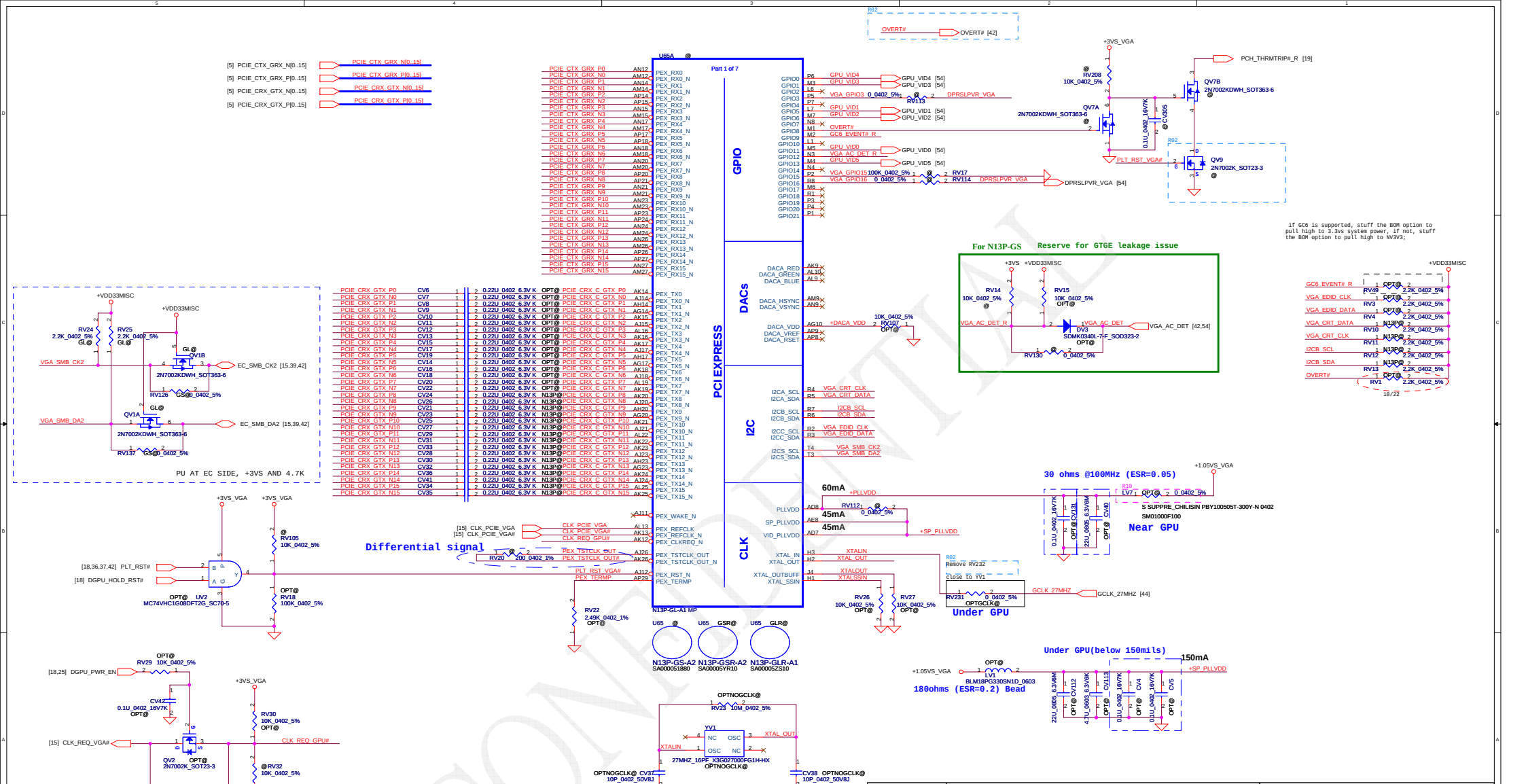

Security Classification	Compal Secret Data		
Issued Date	2011/06/15	Deciphered Date	2012/07/11

THIS SHEET OF ENGINEERING DRAWING IS THE PROPRIETARY PROPERTY OF COMPAL ELECTRONICS, INC. AND CONTAINS CONFIDENTIAL AND TRADE SECRET INFORMATION. THIS SHEET MAY NOT BE TRANSFERED FROM THE CUSTODY OF THE COMPETENT DIVISION OF R&D DEPARTMENT EXCEPT AS AUTHORIZED BY COMPAL ELECTRONICS, INC. NEITHER THIS SHEET NOR THE INFORMATION IT CONTAINS MAY BE USED BY OR DISCLOSED TO ANY THIRD PARTY WITHOUT PRIOR WRITTEN CONSENT OF COMPAL ELECTRONICS, INC.

Compal Electronics, Inc.

Title: SCHEMATICS,MB A9061

Document Number: 4019K3

Rev: C

Date: Monday, December 17, 2012 | Sheet 23 of 63

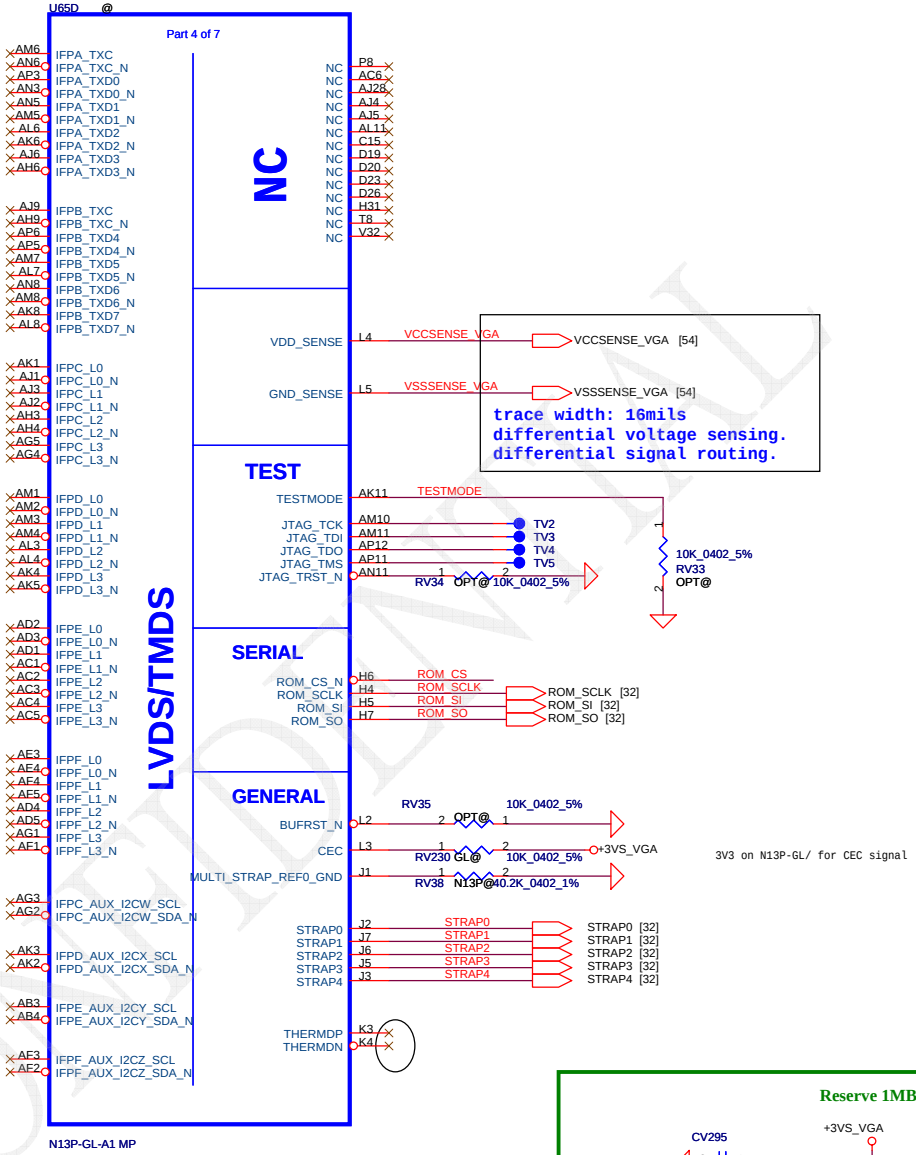

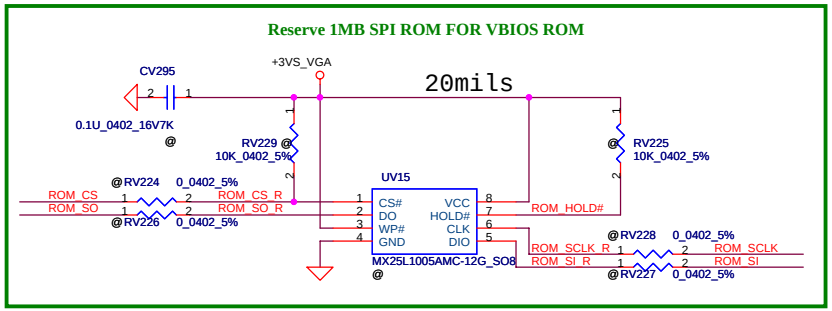

Security Classification	Compal Secret Data		
Issued Date	2011/06/15	Deciphered Date	2012/07/11

THIS SHEET OF ENGINEERING DRAWING IS THE PROPRIETARY PROPERTY OF COMPAL ELECTRONICS, INC. AND CONTAINS CONFIDENTIAL AND TRADE SECRET INFORMATION. THIS SHEET MAY NOT BE TRANSFERED FROM THE CUSTODY OF THE COMPETENT DIVISION OF R&D DEPARTMENT EXCEPT AS AUTHORIZED BY COMPAL ELECTRONICS, INC. NEITHER THIS SHEET NOR THE INFORMATION IT CONTAINS MAY BE USED BY OR DISCLOSED TO ANY THIRD PARTY WITHOUT PRIOR WRITTEN CONSENT OF COMPAL ELECTRONICS, INC.

Compal Electronics, Inc.

Title: **SCHEMATICS,MB A9061**

Size | Document Number: **4019K3** | Rev: C

Date: Monday, December 17, 2012 | Sheet 24 of 63

CONFIDENTIAL

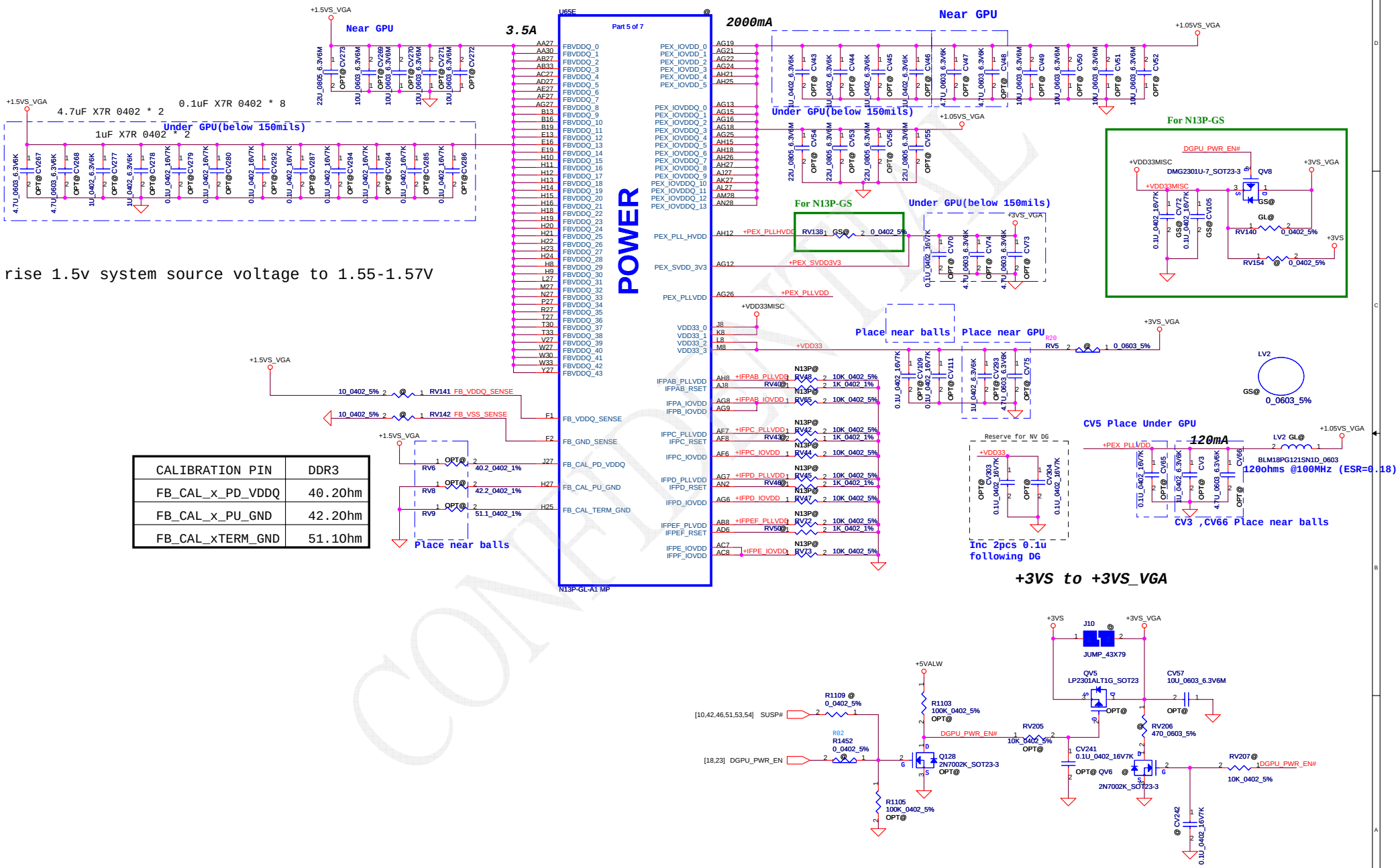

CALIBRATION PIN	DDR3
FB_CAL_x_PD_VDDQ	40.2Ohm
FB_CAL_x_PU_GND	42.2Ohm
FB_CAL_xTERM_GND	51.1Ohm

CONFIDENTIAL

Security Classification	Compal Secret Data		
Issued Date	2011/06/15	Deciphered Date	2012/07/11

THIS SHEET OF ENGINEERING DRAWING IS THE PROPRIETARY PROPERTY OF COMPAL ELECTRONICS, INC. AND CONTAINS CONFIDENTIAL AND TRADE SECRET INFORMATION. THIS SHEET MAY NOT BE TRANSFERED FROM THE CUSTODY OF THE COMPETENT DIVISION OF R&D DEPARTMENT EXCEPT AS AUTHORIZED BY COMPAL ELECTRONICS, INC. NEITHER THIS SHEET NOR THE INFORMATION IT CONTAINS MAY BE USED BY OR DISCLOSED TO ANY THIRD PARTY WITHOUT PRIOR WRITTEN CONSENT OF COMPAL ELECTRONICS, INC.

Compal Electronics, Inc.

Title: **SCHEMATICS,MB A9061**

Size | Document Number: **4019K3** | Rev: C

Date: Monday, December 17, 2012 | Sheet 25 of 63

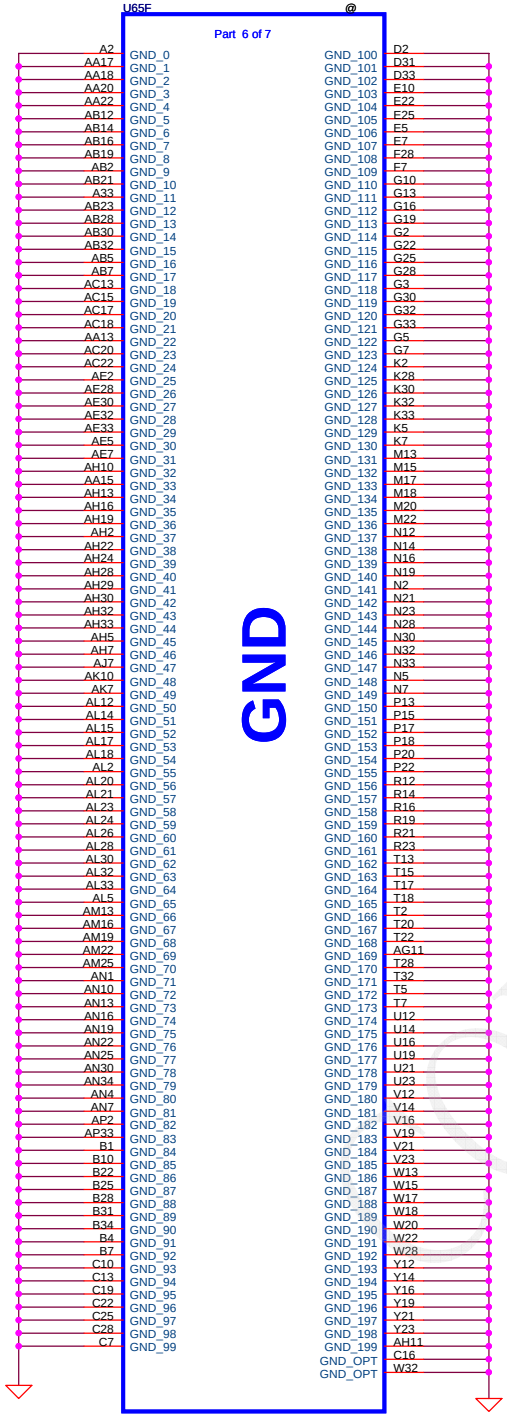

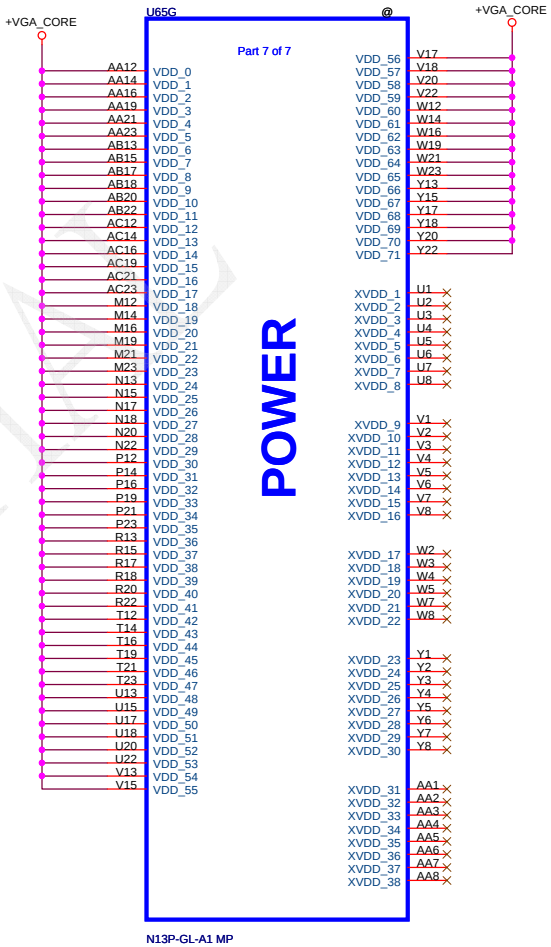

CONFIDENTIAL

Security Classification	Compal Secret Data			Compal Electronics, Inc.
Issued Date	2011/06/15	Deciphered Date	2012/07/11	Title: SCHEMATICS,MB A9061
				Size / Document Number: 4019K3 / Rev: C
				Date: Monday, December 17, 2012 / Sheet 26 of 63

THIS SHEET OF ENGINEERING DRAWING IS THE PROPRIETARY PROPERTY OF COMPAL ELECTRONICS, INC. AND CONTAINS CONFIDENTIAL AND TRADE SECRET INFORMATION. THIS SHEET MAY NOT BE TRANSFERED FROM THE CUSTODY OF THE COMPETENT DIVISION OF R&D DEPARTMENT EXCEPT AS AUTHORIZED BY COMPAL ELECTRONICS, INC. NEITHER THIS SHEET NOR THE INFORMATION IT CONTAINS MAY BE USED BY OR DISCLOSED TO ANY THIRD PARTY WITHOUT PRIOR WRITTEN CONSENT OF COMPAL ELECTRONICS, INC.

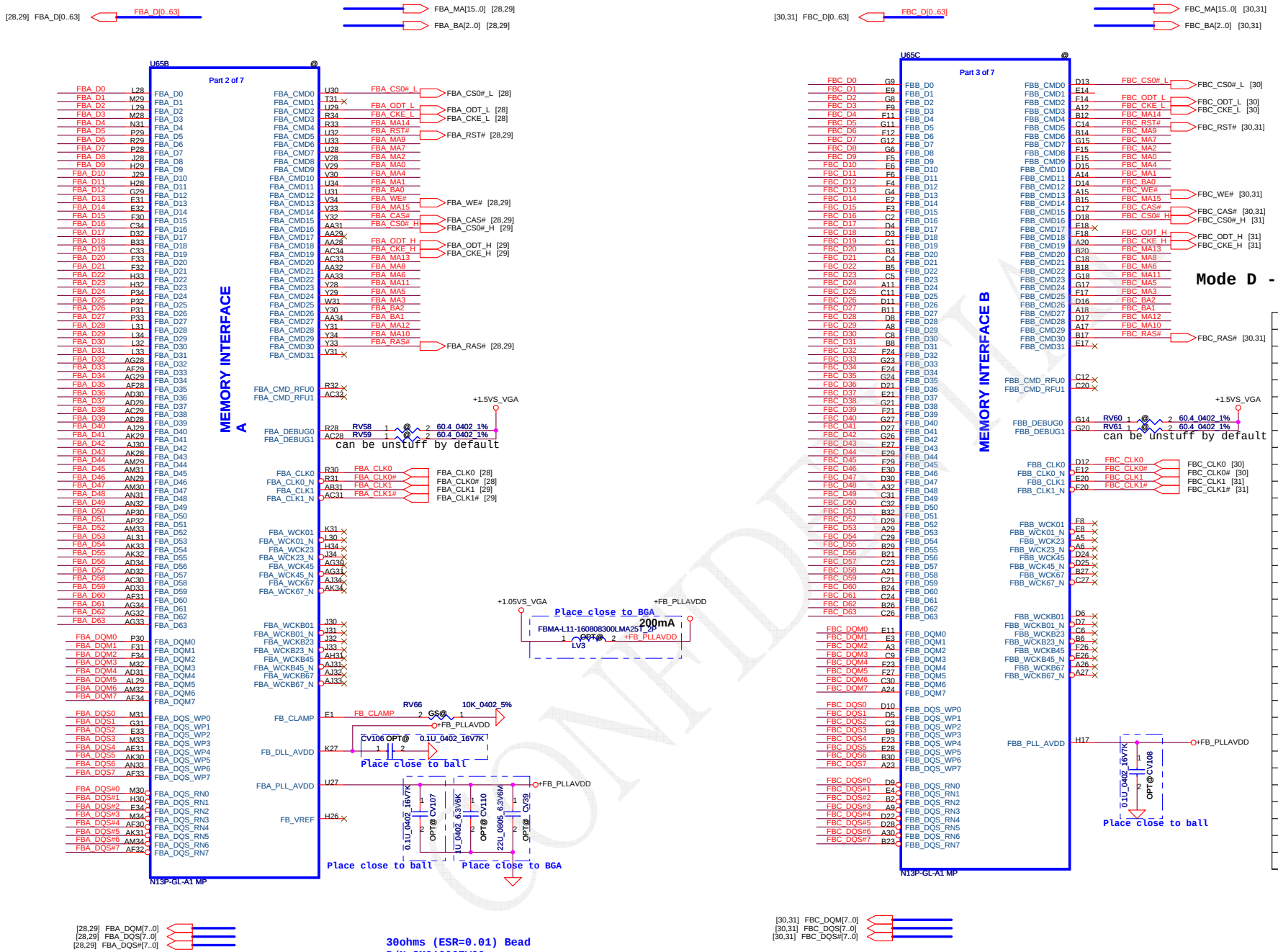

Mode D - Mirror Mode Mapping

Address	DATA Bus 0..31	DATA Bus 32..63
FBx_CMD0	CS0#_L	
FBx_CMD1		
FBx_CMD2	ODT_L	
FBx_CMD3	CKE_L	
FBx_CMD4	A14	A14
FBx_CMD5	RST	RST
FBx_CMD6	A9	A9
FBx_CMD7	A7	A7
FBx_CMD8	A2	A2
FBx_CMD9	A0	A0
FBx_CMD10	A4	A4
FBx_CMD11	A1	A1
FBx_CMD12	BA0	BA0
FBx_CMD13	WE#	WE#
FBx_CMD14	A15	A15
FBx_CMD15	CAS#	CAS#
FBx_CMD16		CS0#_H
FBx_CMD17		
FBx_CMD18		ODT_H
FBx_CMD19		CKE_H
FBx_CMD20	A13	A13
FBx_CMD21	A8	A8
FBx_CMD22	A6	A6
FBx_CMD23	A11	A11
FBx_CMD24	A5	A5
FBx_CMD25	A3	A3
FBx_CMD26	BA2	BA2
FBx_CMD27	BA1	BA1
FBx_CMD28	A12	A12
FBx_CMD29	A10	A10
FBx_CMD30	RAS#	RAS#

CONFIDENTIAL

Security Classification	Compal Secret Data		
Issued Date	2011/06/15	Deciphered Date	2012/07/11

THIS SHEET OF ENGINEERING DRAWING IS THE PROPRIETARY PROPERTY OF COMPAL ELECTRONICS, INC. AND CONTAINS CONFIDENTIAL AND TRADE SECRET INFORMATION. THIS SHEET MAY NOT BE TRANSFERED FROM THE CUSTODY OF THE COMPETENT DIVISION OF R&D DEPARTMENT EXCEPT AS AUTHORIZED BY COMPAL ELECTRONICS, INC. NEITHER THIS SHEET NOR THE INFORMATION IT CONTAINS MAY BE USED BY OR DISCLOSED TO ANY THIRD PARTY WITHOUT PRIOR WRITTEN CONSENT OF COMPAL ELECTRONICS, INC.

Compal Electronics, Inc.

Title: **SCHEMATICS,MB A9061**

Size | Document Number: **4019K3** | Rev: C

Date: Monday, December 17, 2012 | Sheet 27 of 63

Memory Partition A - Lower 32 bits

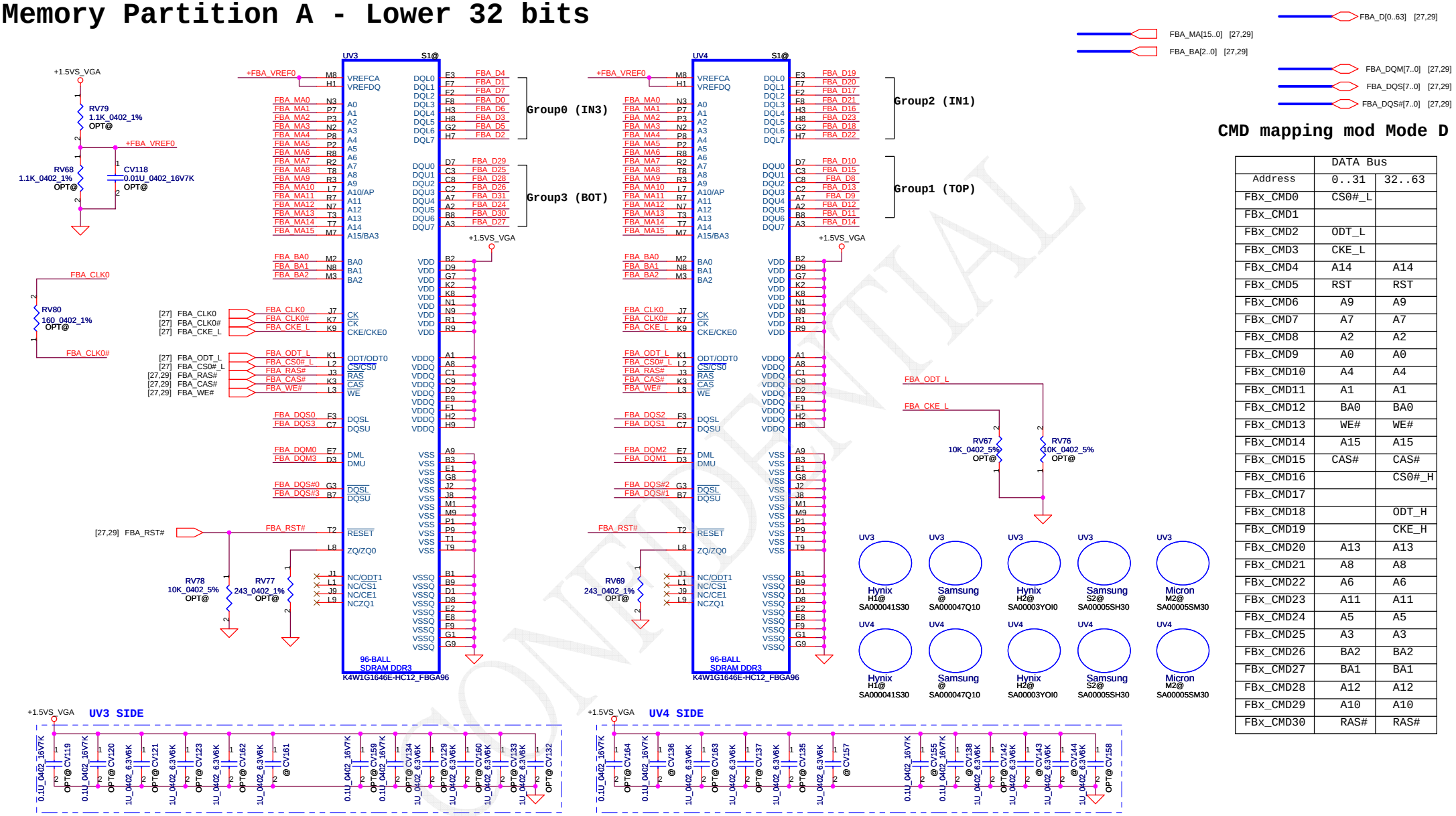

CMD mapping mod Mode D

	DATA Bus	
Address	0..31	32..63
FBx_CMD0	CS0#_L	
FBx_CMD1		
FBx_CMD2	ODT_L	
FBx_CMD3	CKE_L	
FBx_CMD4	A14	A14
FBx_CMD5	RST	RST
FBx_CMD6	A9	A9
FBx_CMD7	A7	A7
FBx_CMD8	A2	A2
FBx_CMD9	A0	A0
FBx_CMD10	A4	A4
FBx_CMD11	A1	A1
FBx_CMD12	BA0	BA0
FBx_CMD13	WE#	WE#
FBx_CMD14	A15	A15
FBx_CMD15	CAS#	CAS#
FBx_CMD16		CS0#_H
FBx_CMD17		
FBx_CMD18		ODT_H
FBx_CMD19		CKE_H
FBx_CMD20	A13	A13
FBx_CMD21	A8	A8
FBx_CMD22	A6	A6
FBx_CMD23	A11	A11
FBx_CMD24	A5	A5
FBx_CMD25	A3	A3
FBx_CMD26	BA2	BA2
FBx_CMD27	BA1	BA1
FBx_CMD28	A12	A12
FBx_CMD29	A10	A10
FBx_CMD30	RAS#	RAS#

CONFIDENTIAL

Security Classification	Compal Secret Data		
Issued Date	2011/06/15	Deciphered Date	2012/07/11

THIS SHEET OF ENGINEERING DRAWING IS THE PROPRIETARY PROPERTY OF COMPAL ELECTRONICS, INC. AND CONTAINS CONFIDENTIAL AND TRADE SECRET INFORMATION. THIS SHEET MAY NOT BE TRANSFERED FROM THE CUSTODY OF THE COMPETENT DIVISION OF R&D DEPARTMENT EXCEPT AS AUTHORIZED BY COMPAL ELECTRONICS, INC. NEITHER THIS SHEET NOR THE INFORMATION IT CONTAINS MAY BE USED BY OR DISCLOSED TO ANY THIRD PARTY WITHOUT PRIOR WRITTEN CONSENT OF COMPAL ELECTRONICS, INC.

Compal Electronics, Inc.

Title: SCHEMATICS,MB A9061

Size | Document Number: 4019K3 | Rev: C

Date: Monday, December 17, 2012 | Sheet 28 of 63

Memory Partition A - Upper 32 bits

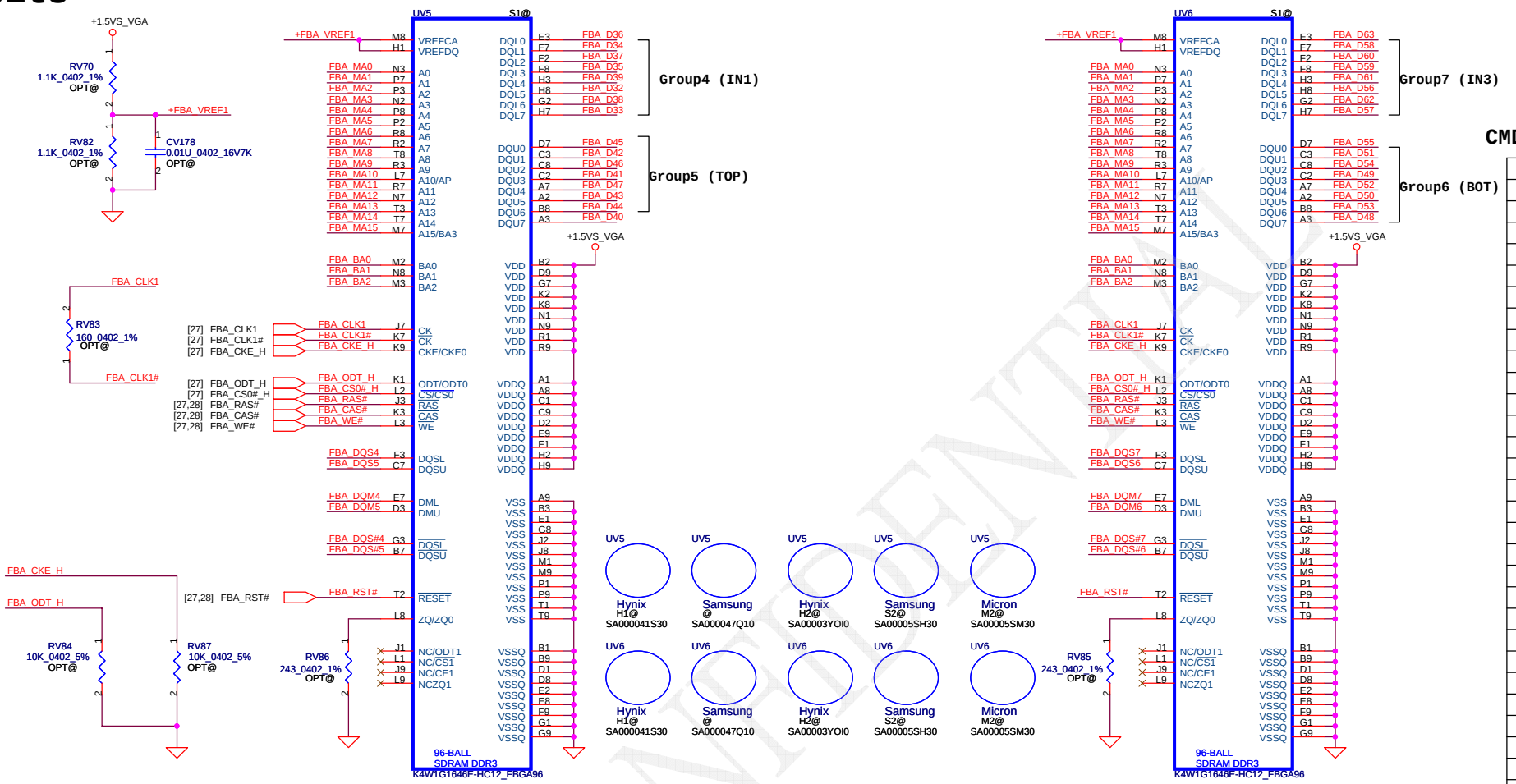

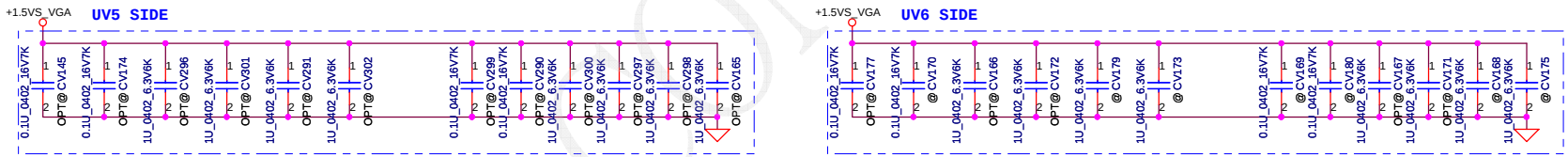

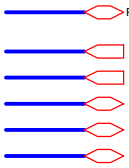

CMD mapping mod Mode D

	DATA Bus	
Address	0..31	32..63
FBx_CMD0	CS0#_L	
FBx_CMD1		
FBx_CMD2	ODT_L	
FBx_CMD3	CKE_L	
FBx_CMD4	A14	A14
FBx_CMD5	RST	RST
FBx_CMD6	A9	A9
FBx_CMD7	A7	A7
FBx_CMD8	A2	A2
FBx_CMD9	A0	A0
FBx_CMD10	A4	A4
FBx_CMD11	A1	A1
FBx_CMD12	BA0	BA0
FBx_CMD13	WE#	WE#
FBx_CMD14	A15	A15
FBx_CMD15	CAS#	CAS#
FBx_CMD16		CS0#_H
FBx_CMD17		
FBx_CMD18		ODT_H
FBx_CMD19		CKE_H
FBx_CMD20	A13	A13
FBx_CMD21	A8	A8
FBx_CMD22	A6	A6
FBx_CMD23	A11	A11
FBx_CMD24	A5	A5
FBx_CMD25	A3	A3
FBx_CMD26	BA2	BA2
FBx_CMD27	BA1	BA1
FBx_CMD28	A12	A12
FBx_CMD29	A10	A10
FBx_CMD30	RAS#	RAS#

CONFIDENTIAL

Security Classification	Compal Secret Data		
Issued Date	2011/06/15	Deciphered Date	2012/07/11

THIS SHEET OF ENGINEERING DRAWING IS THE PROPRIETARY PROPERTY OF COMPAL ELECTRONICS, INC. AND CONTAINS CONFIDENTIAL AND TRADE SECRET INFORMATION. THIS SHEET MAY NOT BE TRANSFERED FROM THE CUSTODY OF THE COMPETENT DIVISION OF R&D DEPARTMENT EXCEPT AS AUTHORIZED BY COMPAL ELECTRONICS, INC. NEITHER THIS SHEET NOR THE INFORMATION IT CONTAINS MAY BE USED BY OR DISCLOSED TO ANY THIRD PARTY WITHOUT PRIOR WRITTEN CONSENT OF COMPAL ELECTRONICS, INC.

Compal Electronics, Inc.

Title: **SCHEMATICS,MB A9061**

Size: | Document Number: **4019K3** | Rev: C

Date: Monday, December 17, 2012 | Sheet 29 of 63

Memory Partition C - Lower 32 bits

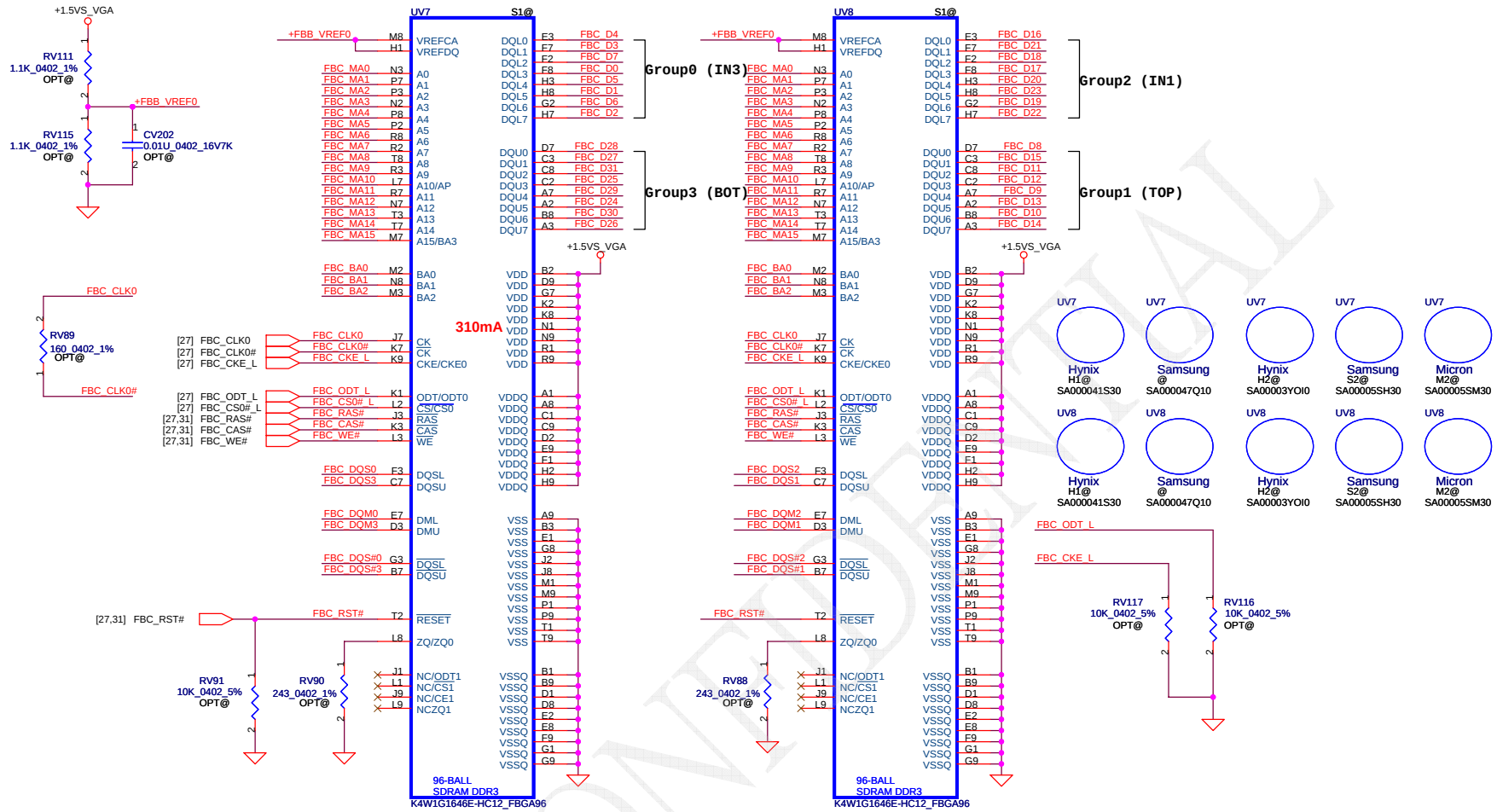

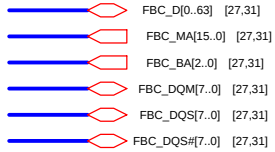

CMD mapping mod Mode D

	DATA Bus	
Address	0..31	32..63
FBx_CMD0	CS0#_L	
FBx_CMD1		
FBx_CMD2	ODT_L	
FBx_CMD3	CKE_L	
FBx_CMD4	A14	A14
FBx_CMD5	RST	RST
FBx_CMD6	A9	A9
FBx_CMD7	A7	A7
FBx_CMD8	A2	A2
FBx_CMD9	A0	A0
FBx_CMD10	A4	A4
FBx_CMD11	A1	A1
FBx_CMD12	BA0	BA0
FBx_CMD13	WE#	WE#
FBx_CMD14	A15	A15
FBx_CMD15	CAS#	CAS#
FBx_CMD16		CS0#_H
FBx_CMD17		
FBx_CMD18		ODT_H
FBx_CMD19		CKE_H
FBx_CMD20	A13	A13
FBx_CMD21	A8	A8
FBx_CMD22	A6	A6
FBx_CMD23	A11	A11
FBx_CMD24	A5	A5
FBx_CMD25	A3	A3
FBx_CMD26	BA2	BA2
FBx_CMD27	BA1	BA1
FBx_CMD28	A12	A12
FBx_CMD29	A10	A10
FBx_CMD30	RAS#	RAS#

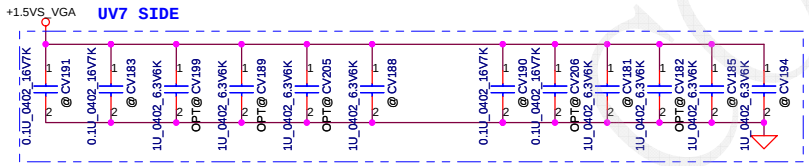

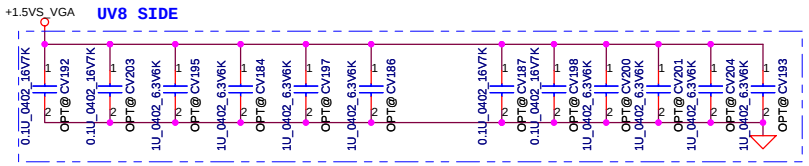

Security Classification	Compal Secret Data		
Issued Date	2011/06/15	Deciphered Date	2012/07/11

THIS SHEET OF ENGINEERING DRAWING IS THE PROPRIETARY PROPERTY OF COMPAL ELECTRONICS, INC. AND CONTAINS CONFIDENTIAL AND TRADE SECRET INFORMATION. THIS SHEET MAY NOT BE TRANSFERED FROM THE CUSTODY OF THE COMPETENT DIVISION OF R&D DEPARTMENT EXCEPT AS AUTHORIZED BY COMPAL ELECTRONICS, INC. NEITHER THIS SHEET NOR THE INFORMATION IT CONTAINS MAY BE USED BY OR DISCLOSED TO ANY THIRD PARTY WITHOUT PRIOR WRITTEN CONSENT OF COMPAL ELECTRONICS, INC.

Compal Electronics, Inc.

Title: SCHEMATICS,MB A9061

Size: Custom | Document Number: 4019K3 | Rev: C

Date: Monday, December 17, 2012 | Sheet 30 of 63

Memory Partition C - Upper 32 bits

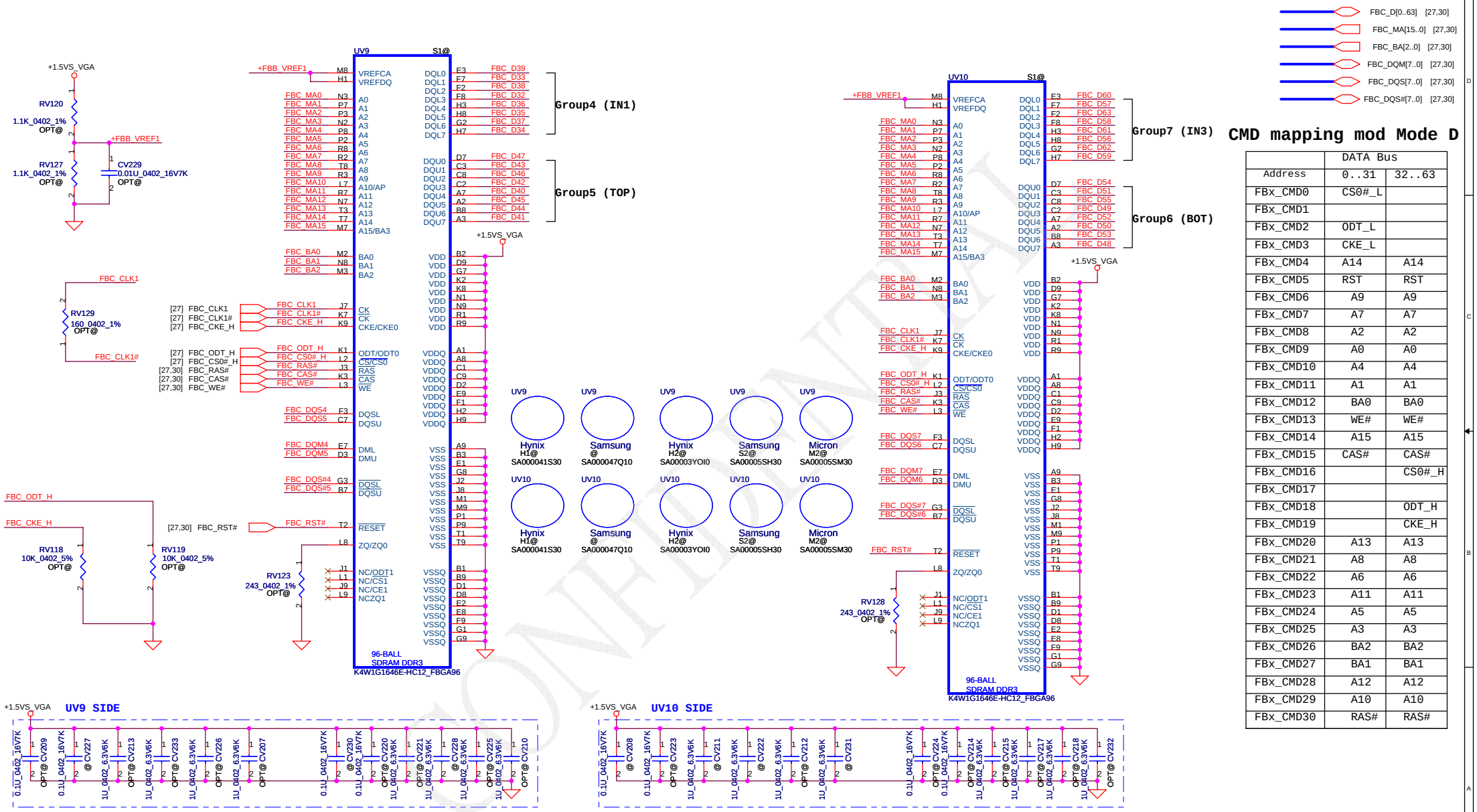

CMD mapping mod Mode D

	DATA Bus	
Address	0..31	32..63
FBx_CMD0	CS0#_L	
FBx_CMD1		
FBx_CMD2	ODT_L	
FBx_CMD3	CKE_L	
FBx_CMD4	A14	A14
FBx_CMD5	RST	RST
FBx_CMD6	A9	A9
FBx_CMD7	A7	A7
FBx_CMD8	A2	A2
FBx_CMD9	A0	A0
FBx_CMD10	A4	A4
FBx_CMD11	A1	A1
FBx_CMD12	BA0	BA0
FBx_CMD13	WE#	WE#
FBx_CMD14	A15	A15
FBx_CMD15	CAS#	CAS#
FBx_CMD16		CS0#_H
FBx_CMD17		
FBx_CMD18		ODT_H
FBx_CMD19		CKE_H
FBx_CMD20	A13	A13
FBx_CMD21	A8	A8
FBx_CMD22	A6	A6
FBx_CMD23	A11	A11
FBx_CMD24	A5	A5
FBx_CMD25	A3	A3
FBx_CMD26	BA2	BA2
FBx_CMD27	BA1	BA1
FBx_CMD28	A12	A12
FBx_CMD29	A10	A10
FBx_CMD30	RAS#	RAS#

CONFIDENTIAL

Security Classification	Compal Secret Data		
Issued Date	2011/06/15	Deciphered Date	2012/07/11

THIS SHEET OF ENGINEERING DRAWING IS THE PROPRIETARY PROPERTY OF COMPAL ELECTRONICS, INC. AND CONTAINS CONFIDENTIAL AND TRADE SECRET INFORMATION. THIS SHEET MAY NOT BE TRANSFERED FROM THE CUSTODY OF THE COMPETENT DIVISION OF R&D DEPARTMENT EXCEPT AS AUTHORIZED BY COMPAL ELECTRONICS, INC. NEITHER THIS SHEET NOR THE INFORMATION IT CONTAINS MAY BE USED BY OR DISCLOSED TO ANY THIRD PARTY WITHOUT PRIOR WRITTEN CONSENT OF COMPAL ELECTRONICS, INC.

Compal Electronics, Inc.

Title: SCHEMATICS,MB A9061

Size: Custom | Document Number: 4019K3 | Rev: C

Date: Monday, December 17, 2012 | Sheet 31 of 63

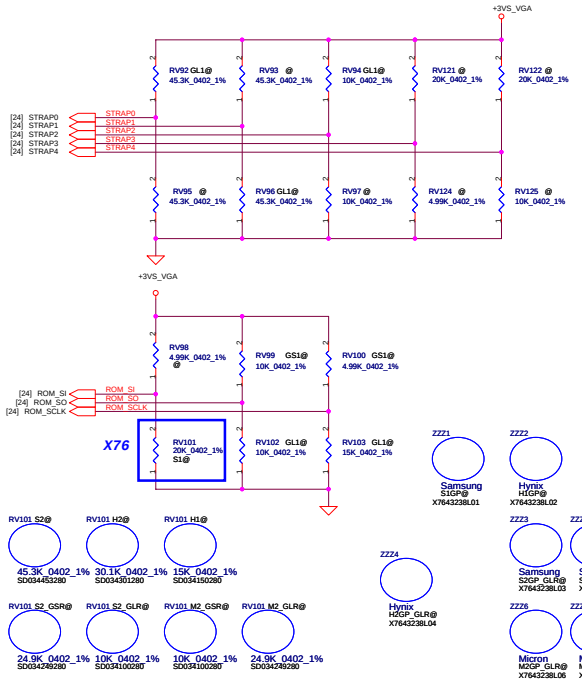

Physical Strapping pin	Power Rail	Logical Strapping Bit3	Logical Strapping Bit2	Logical Strapping Bit1	Logical Strapping Bit0
ROM_SCLK	+3VS_VGA	PCI_DEVID[4]	SUB_VENDOR	SLOT_CLK_CFG/PCI_DEVID[5]	PEX_PLL_EN_TERM
ROM_SI	+3VS_VGA	RAM_CFG[3]	RAM_CFG[2]	RAM_CFG[1]	RAM_CFG[0]
ROM_SO	+3VS_VGA	FB[1]	FB[0]	SMB_ALT_ADDR	VGA_DEVICE
STRAP0	+3VS_VGA	USER[3]	USER[2]	USER[1]	USER[0]
STRAP1	+3VS_VGA	3GIO_PAD_CFG_ADR[3]	3GIO_PAD_CFG_ADR[2]	3GIO_PAD_CFG_ADR[1]	3GIO_PAD_CFG_ADR[0]
STRAP2	+3VS_VGA	PCI_DEVID[3]	PCI_DEVID[2]	PCI_DEVID[1]	PCI_DEVID[0]
STRAP3	+3VS_VGA	SOR3_EXPOSED	SOR2_EXPOSED	SOR1_EXPOSED	SOR0_EXPOSED
STRAP4	+3VS_VGA	RESERVED	PCIE_SPEED_CHANGE_GEN3	PCIE_MAX_SPEED	DP_PLL_VDD33V

Resistor Values	Pull-up to +3VS_VGA	Pull-down to Gnd
5K	1000	0000
10K	1001	0001
15K	1010	0010
20K	1011	0011
25K	1100	0100
30K	1101	0101
35K	1110	0110
45K	1111	0111

Vendor	VRAM Sturcture
Samsung 2G	S2@
Hynix 2G	H2@
Samsung 1G	S1@
Hynix 1G	H1@

SUB_VENDOR	
0	No VBIOS ROM
1	BIOS ROM is present (Default)

3GIO_PADCFG	
3GIO_PADCFG[3:0]	
0110	Notebook Default

XCLK_417	
0	277MHz (Default)
1	Reserved

FB_0_BAR_SIZE	
0	Reserved
1	Reserved
2	256MB (Default)
3	Reserved

SLOT_CLK_CFG	
0	GPU and MCH don't share a common reference clock
1	GPU and MCH share a common reference clock (Default)

SMBUS_ALT_ADDR	
0	0x9E (Default)
1	0x9C (Multi-GPU usage)

VGA_DEVICE	
0	3D Device (Class Code 302h)
1	VGA Device (Default)

USER Straps	
User[3:0]	
1000-1100	Customer defined

PEX_PLL_EN_TERM	
0	Disable (Default)
1	Enable

PCIE_MAX_SPEED	
0	Limit to PCIE Gen1
1	PCIE Gen 2/3 Capable

For N13P-GS strap table

X76

GPU	Frenq.	Memory Size	Memory Config	strap0	strap1	strap2	strap3	strap4	ROM_SI	ROM_SO	ROM_SCLK
N13P-GS	900 MHz	128M* 16* 8 2GB	Samsung (2Gb) K4W2G1646C-HC11	R PU 45K	R PD 5K	R PD 15K	R PD 5K	R PD 45K	R PD 45K	R PU 10K	R PU 5K
N13P-GS	900 MHz	128M* 16* 8 2GB	Hynix (2Gb) H5TQ2G63DFR-11C	R PU 45K	R PD 5K	R PD 15K	R PD 5K	R PD 45K	R PD 30.1K	R PU 10K	R PU 5K
N13P-GS	900 MHz	64M* 16* 8 1GB	Samsung (1Gb) K4W1G1646G-BC11	R PU 45K	R PD 5K	R PD 15K	R PD 5K	R PD 45K	R PD 20K	R PU 10K	R PU 5K
N13P-GS	900 MHz	64M* 16* 8 1GB	Hynix (1Gb) H5TQ1G63DFR-11C	R PU 45K	R PD 5K	R PD 15K	R PD 5K	R PD 45K	R PD 15K	R PU 10K	R PU 5K

strap0 RV92_GS1@ 45.3K_0402_1% SD034453280
strap1 RV96_GS1@ 4.99K_0402_1% SD034499180
strap2 RV97_GS1@ 15K_0402_1% SD034150280
strap3 RV124_GS1@ 4.99K_0402_1% SD034499180
strap4 RV125_GS1@ 45.3K_0402_1% SD034453280

For N13P-GSR strap table

X76

GPU	Frenq.	Memory Size	Memory Config	strap0	strap1	strap2	strap3	strap4	ROM_SI	ROM_SO	ROM_SCLK
N13P-GS	900 MHz	128M* 16* 8 2GB	Samsung (2Gb) K4W2G1646C-HC11	R PU 45K	R PD 5K	R PU 10K	R PD 5K	R PD 45K	R PD 45K	R PU 10K	R PU 5K
N13P-GS	900 MHz	128M* 16* 8 2GB	Hynix (2Gb) H5TQ2G63DFR-11C	R PU 45K	R PD 5K	R PU 10K	R PD 5K	R PD 45K	R PD 30.1K	R PU 10K	R PU 5K
N13P-GS	900 MHz	64M* 16* 8 1GB	Samsung (1Gb) K4W1G1646G-BC11	R PU 45K	R PD 5K	R PU 10K	R PD 5K	R PD 45K	R PD 20K	R PU 10K	R PU 5K
N13P-GS	900 MHz	64M* 16* 8 1GB	Hynix (1Gb) H5TQ1G63DFR-11C	R PU 45K	R PU 5K	R PU 10K	R PD 5K	R PD 45K	R PD 15K	R PU 10K	R PU 5K

strap0 RV92_GSR@ 45.3K_0402_1% SD034453280
strap1 RV96_GSR@ 4.99K_0402_1% SD034499180
strap2 RV94_GSR@ 10K_0402_1% SD034100280
strap3 RV124_GSR@ 4.99K_0402_1% SD034499180
strap4 RV125_GSR@ 45.3K_0402_1% SD034453280
ROM_SO RV99_GSR@ 10K_0402_1% SD034100280
ROM_SCLK RV100_GSR@ 4.99K_0402_1% SD034499180

For N13P-GL strap table

X76

GPU	Frenq.	Memory Size	Memory Config	strap0	strap1	strap2	strap3	strap4	ROM_SI	ROM_SO	ROM_SCLK
N13P-GL	900 MHz	128M* 16* 8 2GB	Samsung (2Gb) K4W2G1646C-HC11	R PU 45K	R PD 45K	R PU 10K	n/a	n/a	R PD 45K	R PD 10K	R PD 15K
N13P-GL	900 MHz	128M* 16* 8 2GB	Hynix (2Gb) H5TQ2G63DFR-11C	R PU 45K	R PD 45K	R PU 10K	n/a	n/a	R PD 30.1K	R PD 10K	R PD 15K
N13P-GL	900 MHz	64M* 16* 8 1GB	Samsung (1Gb) K4W1G1646G-BC11	R PU 45K	R PD 45K	R PU 10K	n/a	n/a	R PD 20K	R PD 10K	R PD 15K
N13P-GL	900 MHz	64M* 16* 8 1GB	Hynix (1Gb) H5TQ1G63DFR-11C	R PU 45K	R PD 45K	R PU 10K	n/a	n/a	R PD 15K	R PD 10K	R PD 15K

For N13P-GLR strap table

X76

GPU	Frenq.	Memory Size	Memory Config	strap0	strap1	strap2	strap3	strap4	ROM_SI	ROM_SO	ROM_SCLK
N13P-GL	900 MHz	128M* 16* 8 2GB	Samsung (2Gb) K4W2G1646C-HC11	R PU 45K	R PD 45K	R PD 20K	n/a	n/a	R PD 45K	R PD 10K	R PD 15K
N13P-GL	900 MHz	128M* 16* 8 2GB	Hynix (2Gb) H5TQ2G63DFR-11C	R PU 45K	R PD 45K	R PD 20K	n/a	n/a	R PD 30.1K	R PD 10K	R PD 15K
N13P-GL	900 MHz	64M* 16* 8 1GB	Samsung (1Gb) K4W1G1646G-BC11	R PU 45K	R PD 45K	R PD 20K	n/a	n/a	R PD 20K	R PD 10K	R PD 15K
N13P-GL	900 MHz	64M* 16* 8 1GB	Hynix (1Gb) H5TQ1G63DFR-11C	R PU 45K	R PD 45K	R PD 20K	n/a	n/a	R PD 15K	R PD 10K	R PD 15K

strap0 RV92_GLR@ 45.3K_0402_1% SD034453280
strap1 RV96_GLR@ 45.3K_0402_1% SD034453280
strap2 RV97_GLR@ 20K_0402_1% SD034200280
strap3
strap4
ROM_SO RV102_GLR@ 10K_0402_1% SD034100280
ROM_SCLK RV103_GLR@ 15K_0402_1% SD034150280

CONFIDENTIAL

Security Classification	Compal Secret Data		
Issued Date	2011/06/15	Deciphered Date	2012/07/11

THIS SHEET OF ENGINEERING DRAWING IS THE PROPRIETARY PROPERTY OF COMPAL ELECTRONICS, INC. AND CONTAINS CONFIDENTIAL AND TRADE SECRET INFORMATION. THIS SHEET MAY NOT BE TRANSFERED FROM THE CUSTODY OF THE COMPETENT DIVISION OF R&D DEPARTMENT EXCEPT AS AUTHORIZED BY COMPAL ELECTRONICS, INC. NEITHER THIS SHEET NOR THE INFORMATION IT CONTAINS MAY BE USED BY OR DISCLOSED TO ANY THIRD PARTY WITHOUT PRIOR WRITTEN CONSENT OF COMPAL ELECTRONICS, INC.

Compal Electronics, Inc.

Title: SCHEMATICS,MB A9061

Size: Custom | Document Number: 4019K3 | Rev: C

Date: Monday, December 17, 2012 | Sheet 32 of 63

LCD POWER CIRCUIT

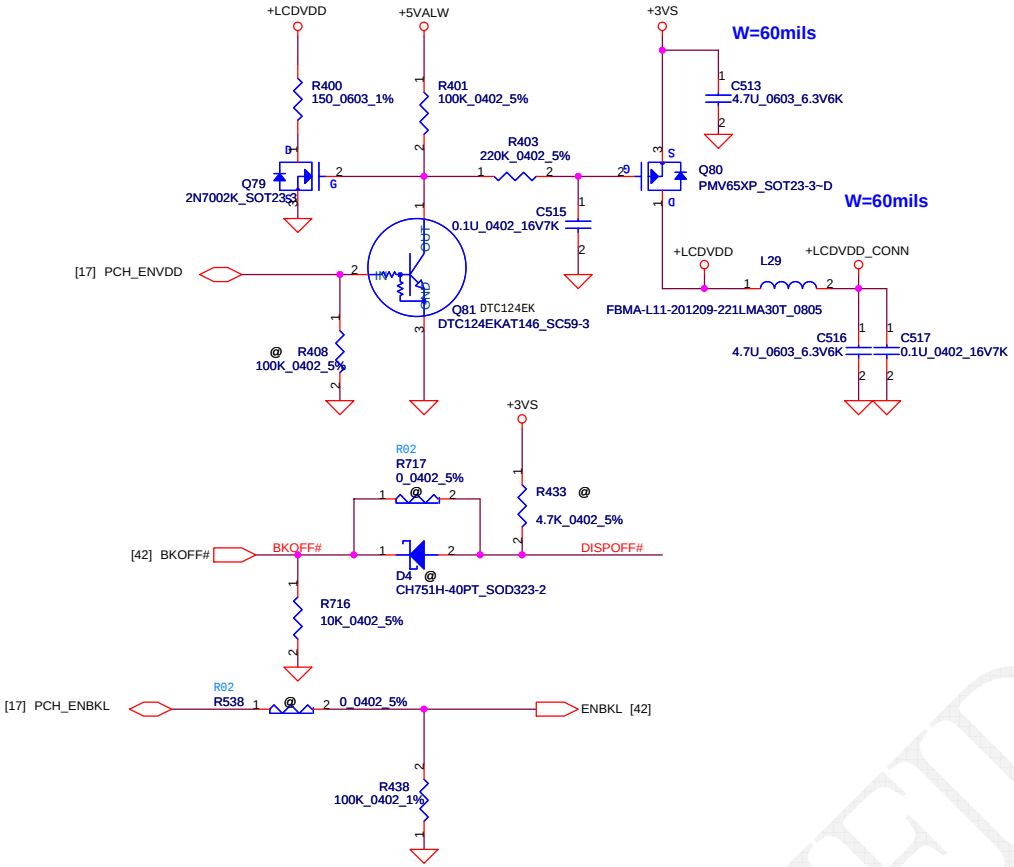

CMOS Camera

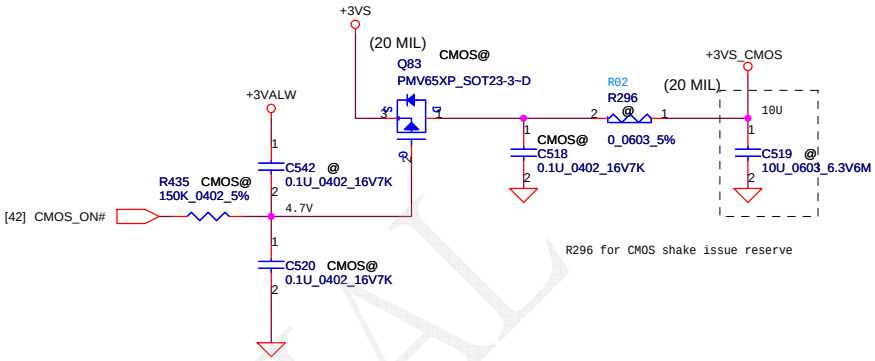

VGA LCD/PANEL BD. Conn.

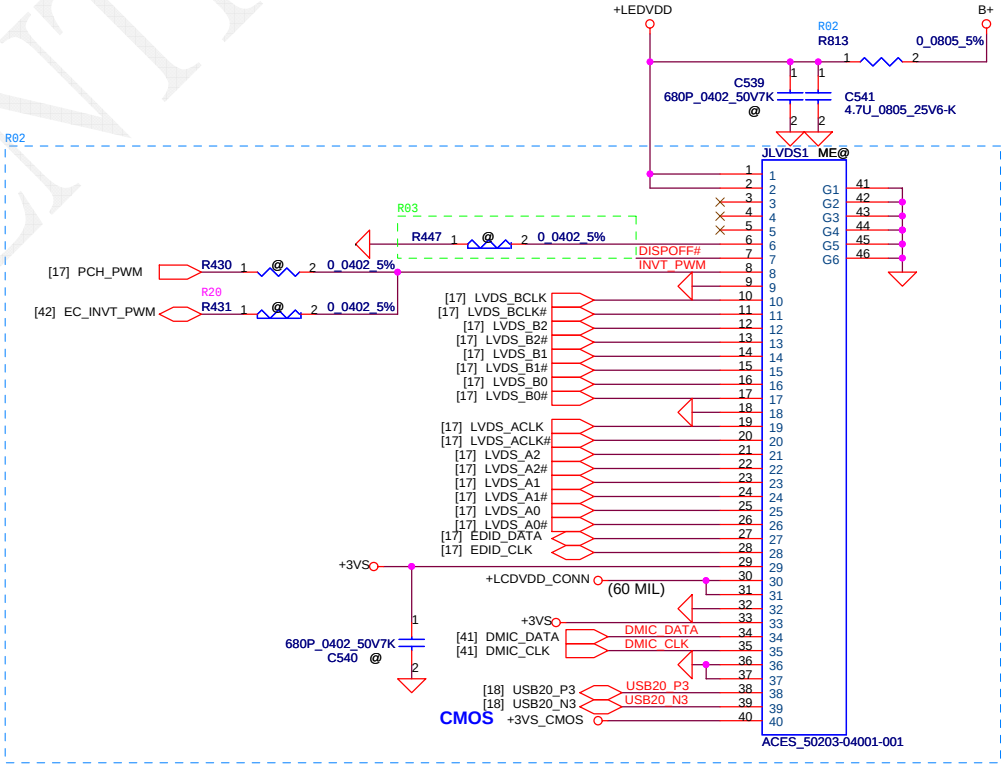

CONFIDENTIAL

Security Classification	Compal Secret Data		
Issued Date	2011/06/15	Deciphered Date	2012/07/11

THIS SHEET OF ENGINEERING DRAWING IS THE PROPRIETARY PROPERTY OF COMPAL ELECTRONICS, INC. AND CONTAINS CONFIDENTIAL AND TRADE SECRET INFORMATION. THIS SHEET MAY NOT BE TRANSFERED FROM THE CUSTODY OF THE COMPETENT DIVISION OF R&D DEPARTMENT EXCEPT AS AUTHORIZED BY COMPAL ELECTRONICS, INC. NEITHER THIS SHEET NOR THE INFORMATION IT CONTAINS MAY BE USED BY OR DISCLOSED TO ANY THIRD PARTY WITHOUT PRIOR WRITTEN CONSENT OF COMPAL ELECTRONICS, INC.

Compal Electronics, Inc.

Title: **SCHEMATICS,MB A9061**

Size: Custom | Document Number: **4019K3** | Rev: C

Date: Monday, December 17, 2012 | Sheet 33 of 63

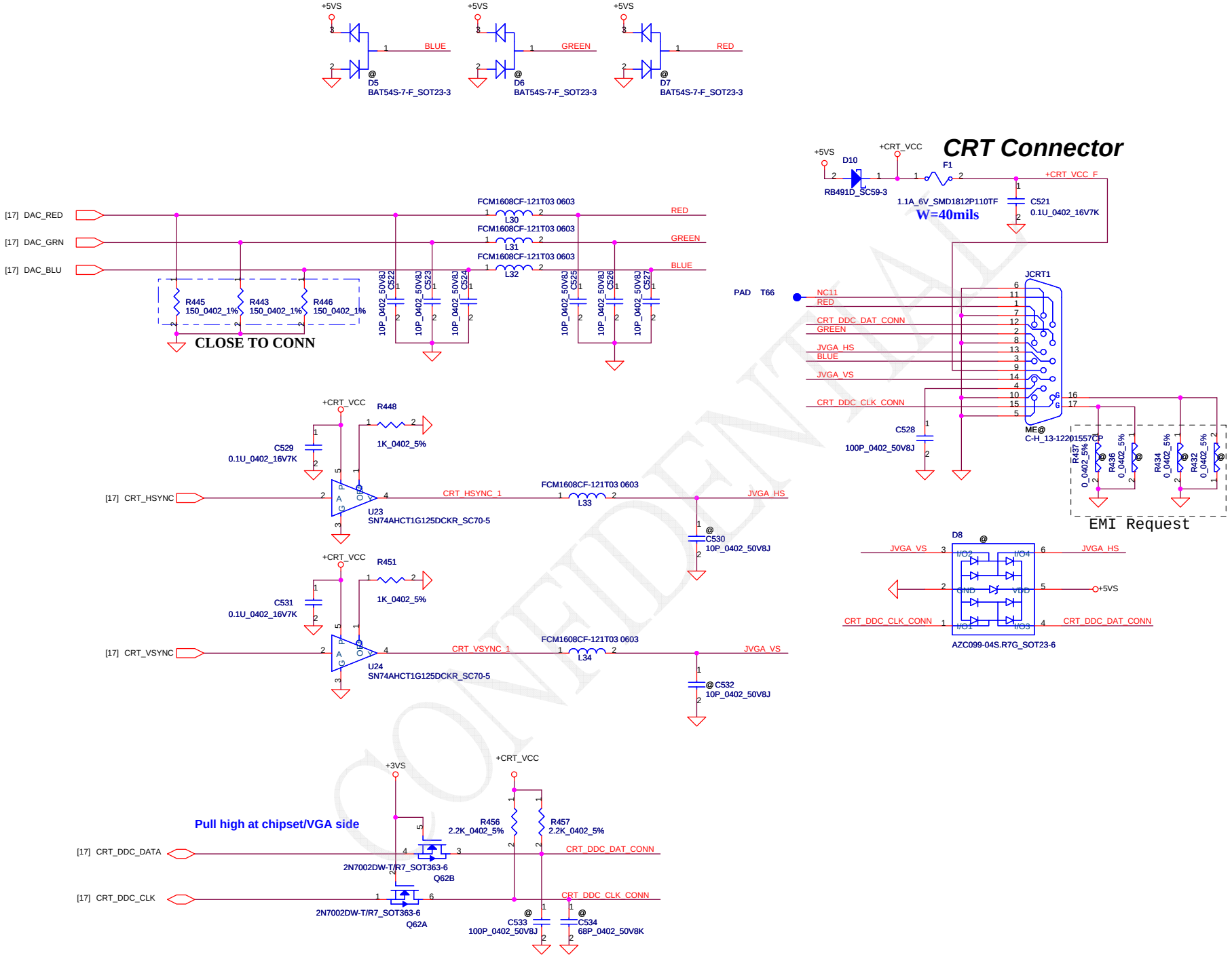

CONFIDENTIAL

Security Classification	Compal Secret Data		
Issued Date	2011/06/15	Deciphered Date	2012/07/11

THIS SHEET OF ENGINEERING DRAWING IS THE PROPRIETARY PROPERTY OF COMPAL ELECTRONICS, INC. AND CONTAINS CONFIDENTIAL AND TRADE SECRET INFORMATION. THIS SHEET MAY NOT BE TRANSFERED FROM THE CUSTODY OF THE COMPETENT DIVISION OF R&D DEPARTMENT EXCEPT AS AUTHORIZED BY COMPAL ELECTRONICS, INC. NEITHER THIS SHEET NOR THE INFORMATION IT CONTAINS MAY BE USED BY OR DISCLOSED TO ANY THIRD PARTY WITHOUT PRIOR WRITTEN CONSENT OF COMPAL ELECTRONICS, INC.

Compal Electronics, Inc.

Title: **SCHEMATICS,MB A9061**

Size: Custom | Document Number: **4019K3** | Rev: C

Date: Monday, December 17, 2012 | Sheet 34 of 63

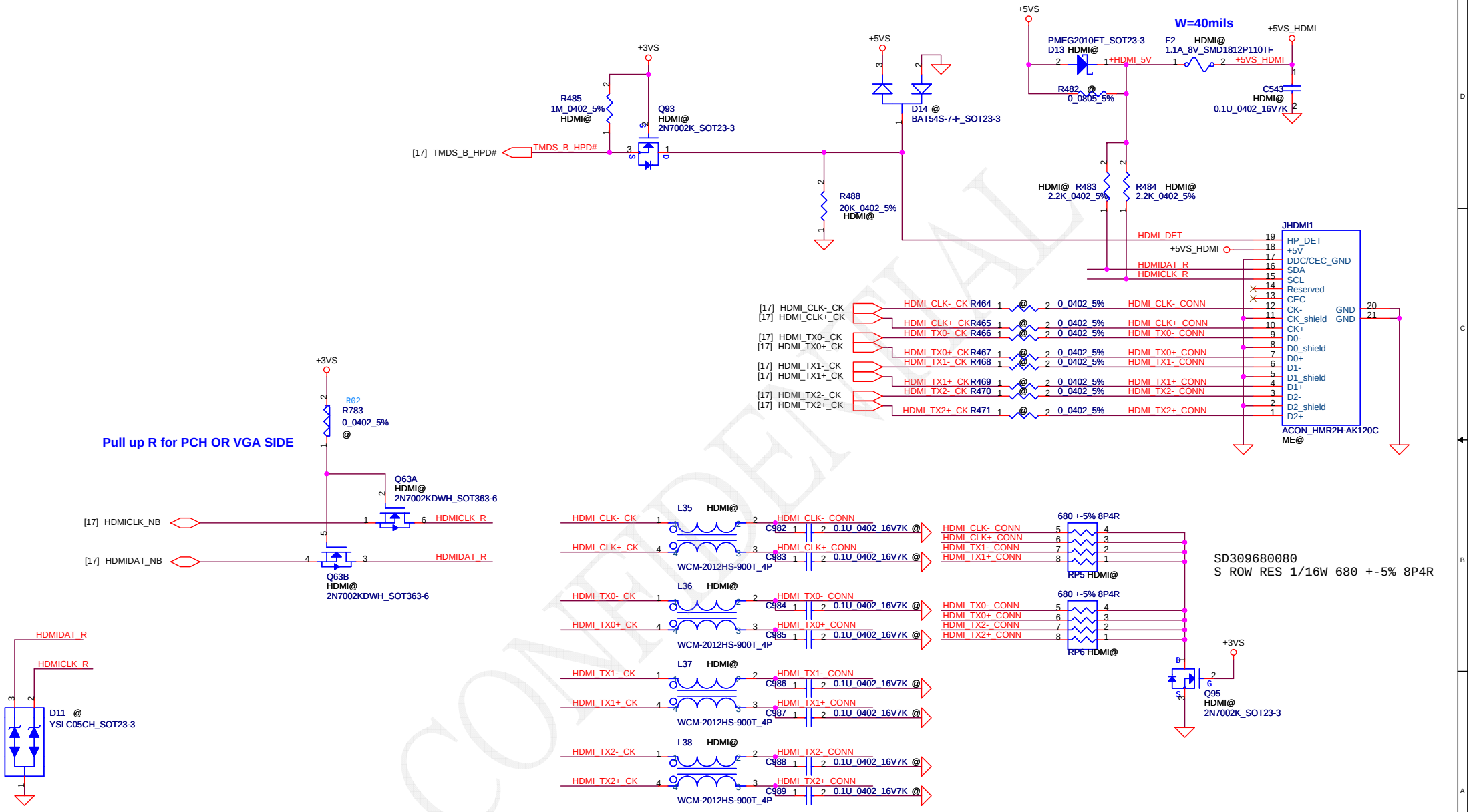

CONFIDENTIAL

Security Classification	Compal Secret Data		
Issued Date	2011/06/15	Deciphered Date	2012/07/11

THIS SHEET OF ENGINEERING DRAWING IS THE PROPRIETARY PROPERTY OF COMPAL ELECTRONICS, INC. AND CONTAINS CONFIDENTIAL AND TRADE SECRET INFORMATION. THIS SHEET MAY NOT BE TRANSFERED FROM THE CUSTODY OF THE COMPETENT DIVISION OF R&D DEPARTMENT EXCEPT AS AUTHORIZED BY COMPAL ELECTRONICS, INC. NEITHER THIS SHEET NOR THE INFORMATION IT CONTAINS MAY BE USED BY OR DISCLOSED TO ANY THIRD PARTY WITHOUT PRIOR WRITTEN CONSENT OF COMPAL ELECTRONICS, INC.

Compal Electronics,Ltd.

Title: **SCHEMATICS,MB A9061**

Size: B | Document Number: **4019K3** | Rev: C

Date: Monday, December 17, 2012 | Sheet 35 of 63

Mini-Express Card for WLAN/WiMAX(Half)

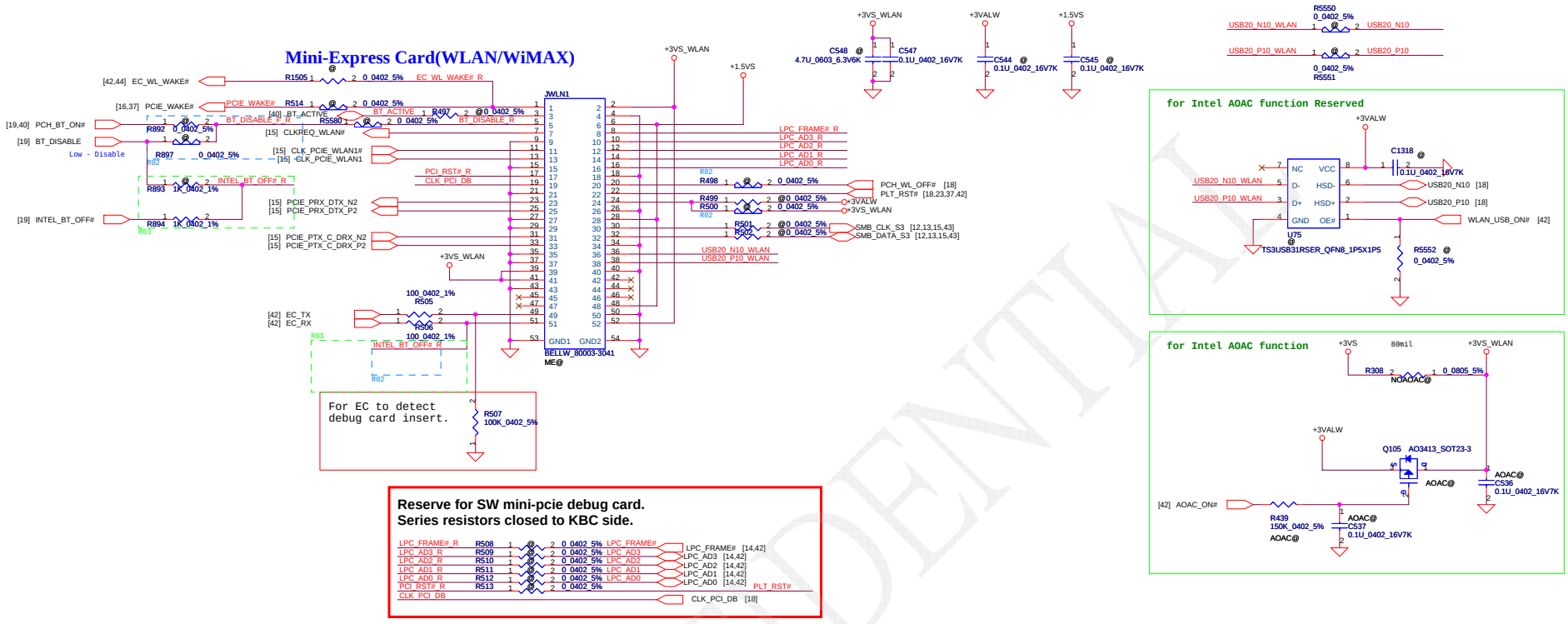

Reserve for SW mini-pcie debug card.
Series resistors closed to KBC side.

LPC_FRAME#_R	R508	0_0402_5%	LPC_FRAME#	LPC_FRAME# [14,42]
LPC_AD3_R	R509	0_0402_5%	LPC_AD3	LPC_AD3 [14,42]
LPC_AD2_R	R510	0_0402_5%	LPC_AD2	LPC_AD2 [14,42]
LPC_AD1_R	R511	0_0402_5%	LPC_AD1	LPC_AD1 [14,42]
LPC_AD0_R	R512	0_0402_5%	LPC_AD0	LPC_AD0 [14,42]
PCI_RST#_R	R513	0_0402_5%		PLT_RST#
CLK_PCI_DB				CLK_PCI_DB [18]

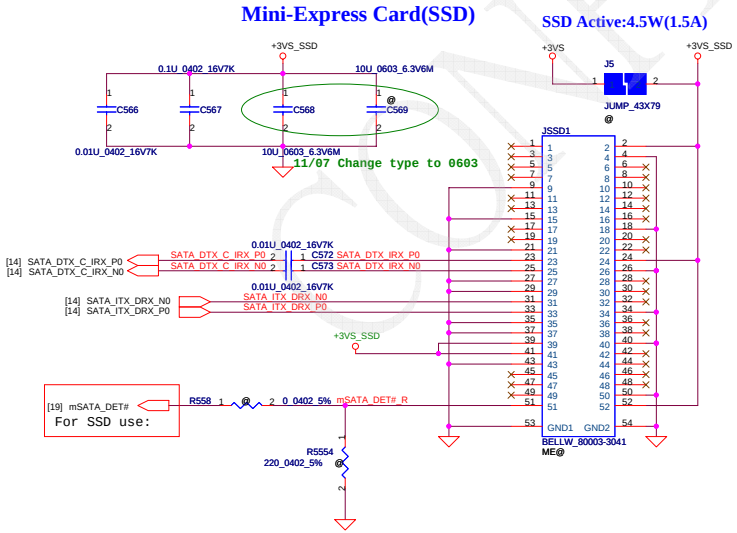

CONFIDENTIAL

Security Classification	Compal Secret Data		
Issued Date	2011/06/15	Deciphered Date	2012/07/11

THIS SHEET OF ENGINEERING DRAWING IS THE PROPRIETARY PROPERTY OF COMPAL ELECTRONICS, INC. AND CONTAINS CONFIDENTIAL AND TRADE SECRET INFORMATION. THIS SHEET MAY NOT BE TRANSFERED FROM THE CUSTODY OF THE COMPETENT DIVISION OF R&D DEPARTMENT EXCEPT AS AUTHORIZED BY COMPAL ELECTRONICS, INC. NEITHER THIS SHEET NOR THE INFORMATION IT CONTAINS MAY BE USED BY OR DISCLOSED TO ANY THIRD PARTY WITHOUT PRIOR WRITTEN CONSENT OF COMPAL ELECTRONICS, INC.

Compal Electronics, Inc.

Title: SCHEMATICS,MB A9061

Size | Document Number: 4019K3 | Rev: C

Date: Monday, December 17, 2012 | Sheet 36 of 63

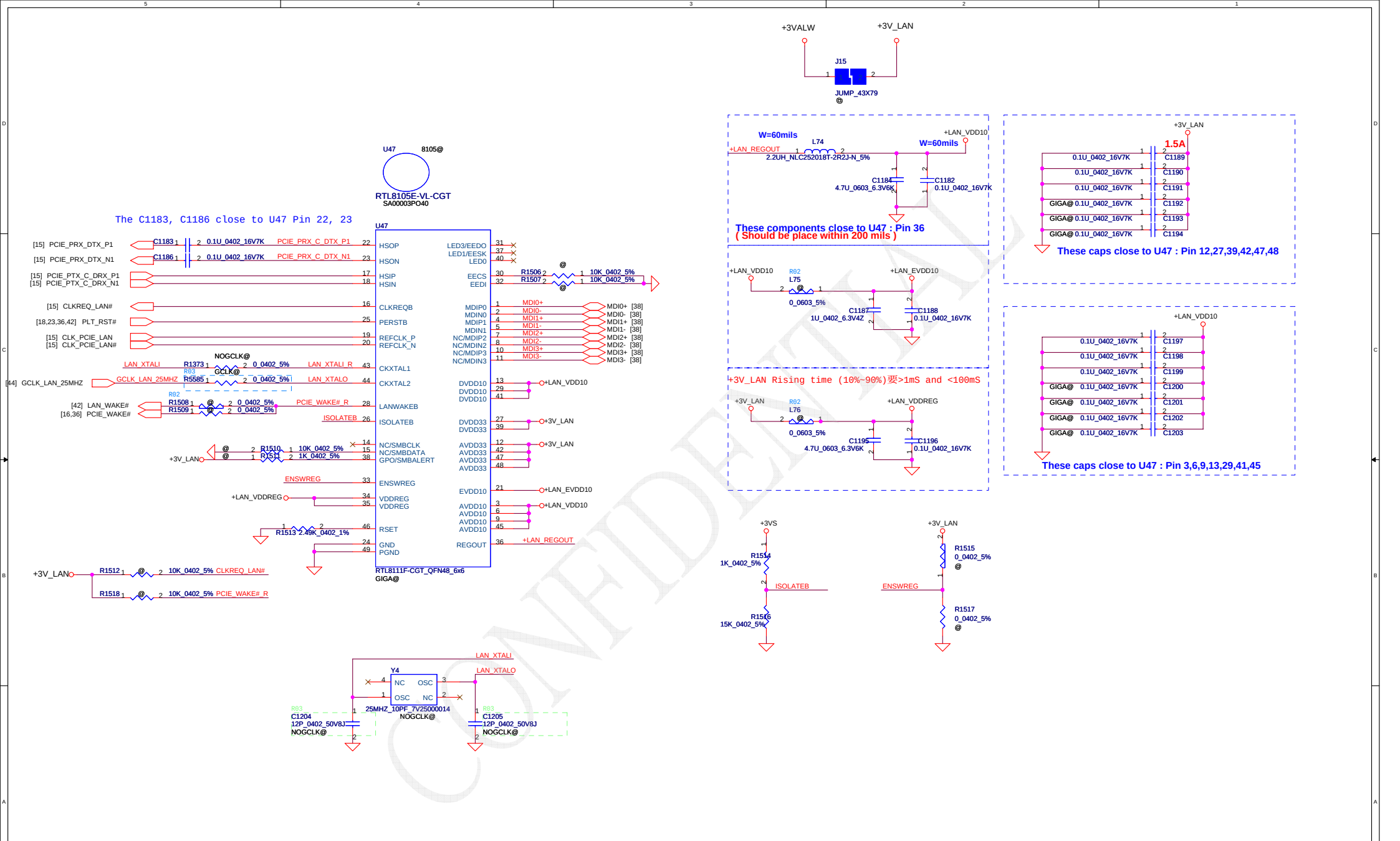

CONFIDENTIAL

Security Classification	Compal Secret Data		
Issued Date	2011/06/15	Deciphered Date	2012/07/11

THIS SHEET OF ENGINEERING DRAWING IS THE PROPRIETARY PROPERTY OF COMPAL ELECTRONICS, INC. AND CONTAINS CONFIDENTIAL AND TRADE SECRET INFORMATION. THIS SHEET MAY NOT BE TRANSFERED FROM THE CUSTODY OF THE COMPETENT DIVISION OF R&D DEPARTMENT EXCEPT AS AUTHORIZED BY COMPAL ELECTRONICS, INC. NEITHER THIS SHEET NOR THE INFORMATION IT CONTAINS MAY BE USED BY OR DISCLOSED TO ANY THIRD PARTY WITHOUT PRIOR WRITTEN CONSENT OF COMPAL ELECTRONICS, INC.

Compal Electronics, Inc.

Title: SCHEMATICS,MB A9061

Size: Custom | Document Number: 4019K3 | Rev: C

Date: Monday, December 17, 2012 | Sheet 37 of 63

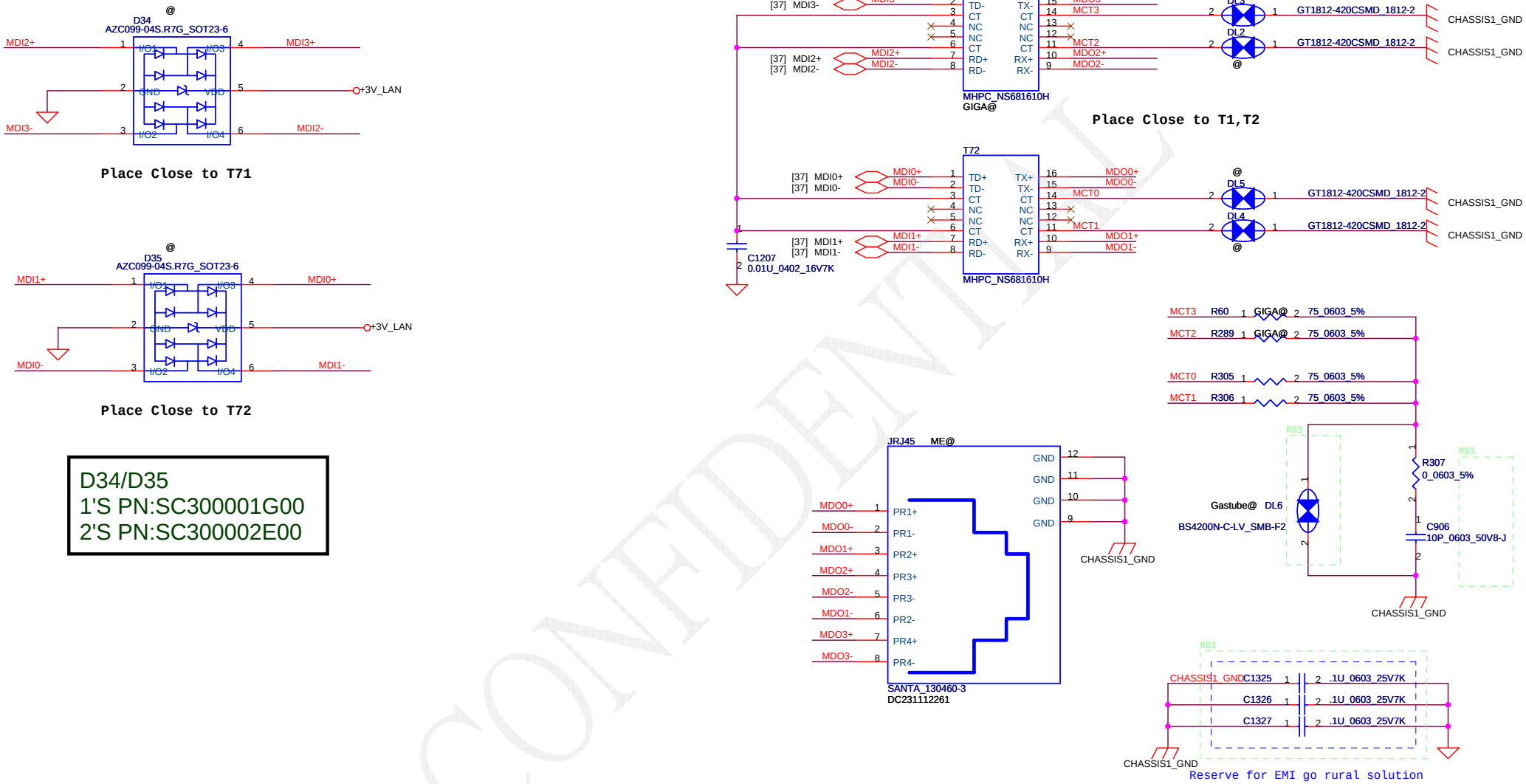

CONFIDENTIAL

Security Classification	Compal Secret Data		
Issued Date	2011/06/15	Deciphered Date	2012/07/11

THIS SHEET OF ENGINEERING DRAWING IS THE PROPRIETARY PROPERTY OF COMPAL ELECTRONICS, INC. AND CONTAINS CONFIDENTIAL AND TRADE SECRET INFORMATION. THIS SHEET MAY NOT BE TRANSFERED FROM THE CUSTODY OF THE COMPETENT DIVISION OF R&D DEPARTMENT EXCEPT AS AUTHORIZED BY COMPAL ELECTRONICS, INC. NEITHER THIS SHEET NOR THE INFORMATION IT CONTAINS MAY BE USED BY OR DISCLOSED TO ANY THIRD PARTY WITHOUT PRIOR WRITTEN CONSENT OF COMPAL ELECTRONICS, INC.

Compal Electronics, Inc.

Title: SCHEMATICS,MB A9061

Size: B | Document Number: 4019K3 | Rev: C

Date: Monday, December 17, 2012 | Sheet 38 of 63

SMSC thermal sensor placed near by VRAM

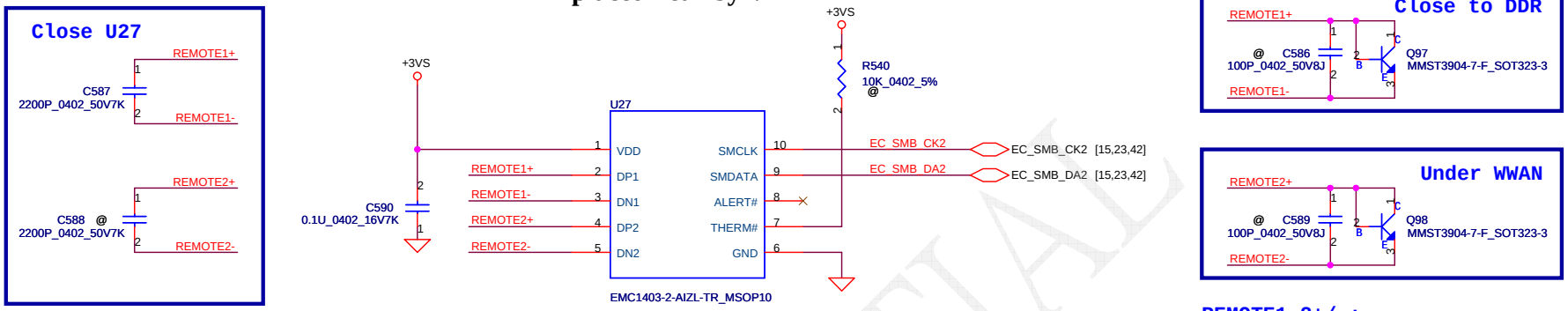

Address 1001_101xb

REMOTE1,2+/-:
Trace width/space:10/10 mil
Trace length:<8"

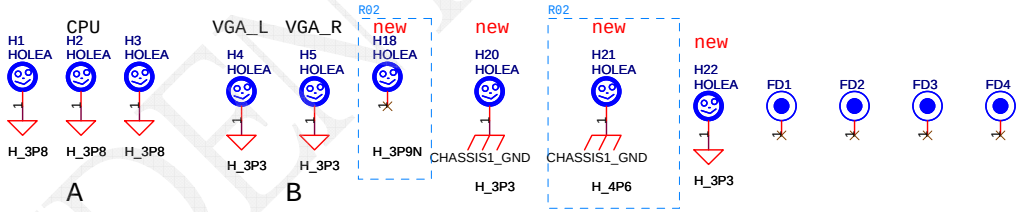

FAN1 Conn

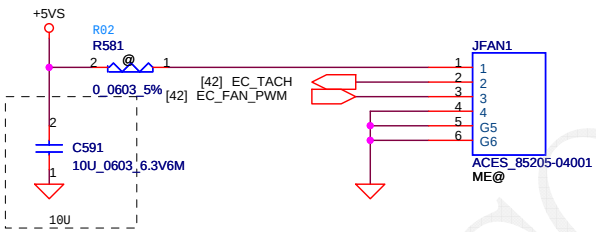

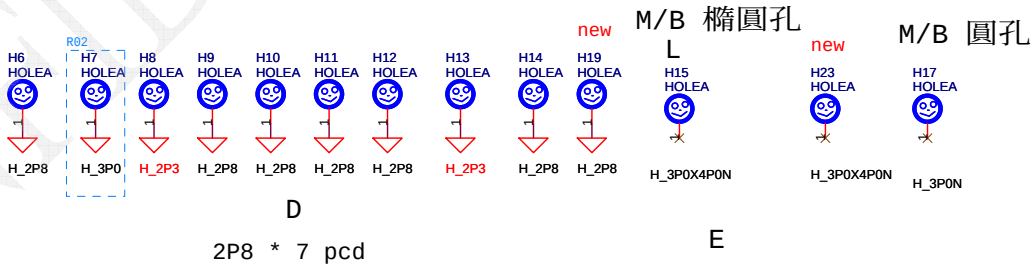

2P8 * 7 pcd

CONFIDENTIAL

Security Classification	Compal Secret Data		
Issued Date	2011/06/15	Deciphered Date	2012/07/11

THIS SHEET OF ENGINEERING DRAWING IS THE PROPRIETARY PROPERTY OF COMPAL ELECTRONICS, INC. AND CONTAINS CONFIDENTIAL AND TRADE SECRET INFORMATION. THIS SHEET MAY NOT BE TRANSFERED FROM THE CUSTODY OF THE COMPETENT DIVISION OF R&D DEPARTMENT EXCEPT AS AUTHORIZED BY COMPAL ELECTRONICS, INC. NEITHER THIS SHEET NOR THE INFORMATION IT CONTAINS MAY BE USED BY OR DISCLOSED TO ANY THIRD PARTY WITHOUT PRIOR WRITTEN CONSENT OF COMPAL ELECTRONICS, INC.

Compal Electronics,Ltd.

Title: **SCHEMATICS,MB A9061**

Size: B | Document Number: **4019K3** | Rev: C

Date: Monday, December 17, 2012 | Sheet 39 of 63

BT MODULE CONN

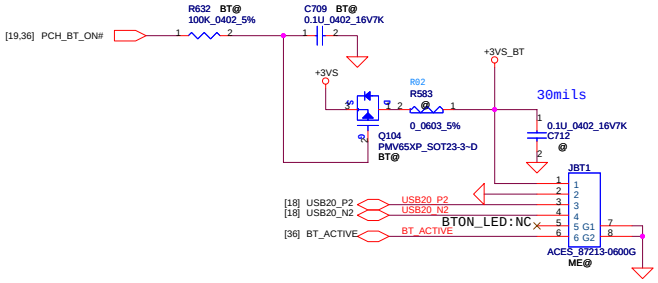

SATA HDD Conn.

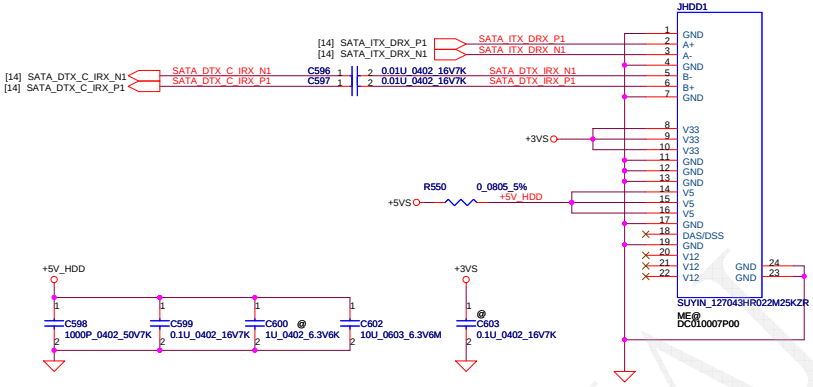

ODD Power Control

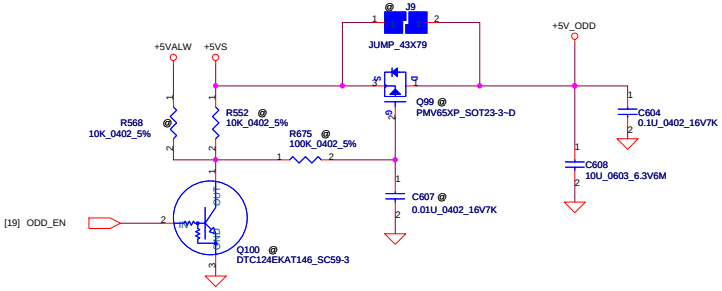

FOR 15" SATA ODD FFC Conn.

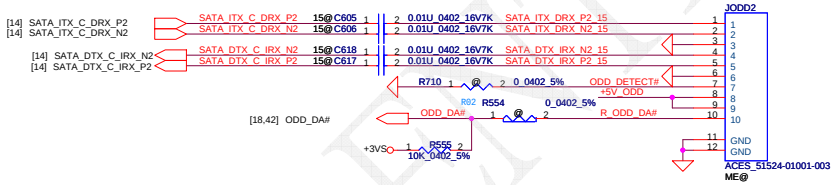

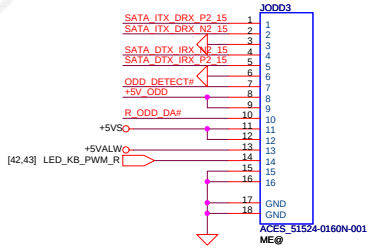

Co-lay

FOR 14" SATA ODD Conn.

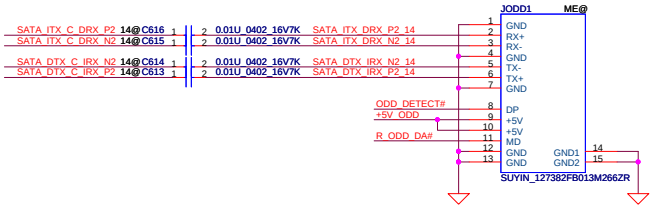

CONFIDENTIAL

Security Classification	Compal Secret Data		
Issued Date	2011/06/15	Deciphered Date	2012/07/11

THIS SHEET OF ENGINEERING DRAWING IS THE PROPRIETARY PROPERTY OF COMPAL ELECTRONICS, INC. AND CONTAINS CONFIDENTIAL AND TRADE SECRET INFORMATION. THIS SHEET MAY NOT BE TRANSFERED FROM THE CUSTODY OF THE COMPETENT DIVISION OF R&D DEPARTMENT EXCEPT AS AUTHORIZED BY COMPAL ELECTRONICS, INC. NEITHER THIS SHEET NOR THE INFORMATION IT CONTAINS MAY BE USED BY OR DISCLOSED TO ANY THIRD PARTY WITHOUT PRIOR WRITTEN CONSENT OF COMPAL ELECTRONICS, INC.

Compal Electronics, Inc.

Title: **SCHEMATICS,MB A9061**

Size	Document Number	Rev
Custom	4019K3	C

Date: Monday, December 17, 2012 | Sheet 40 of 63

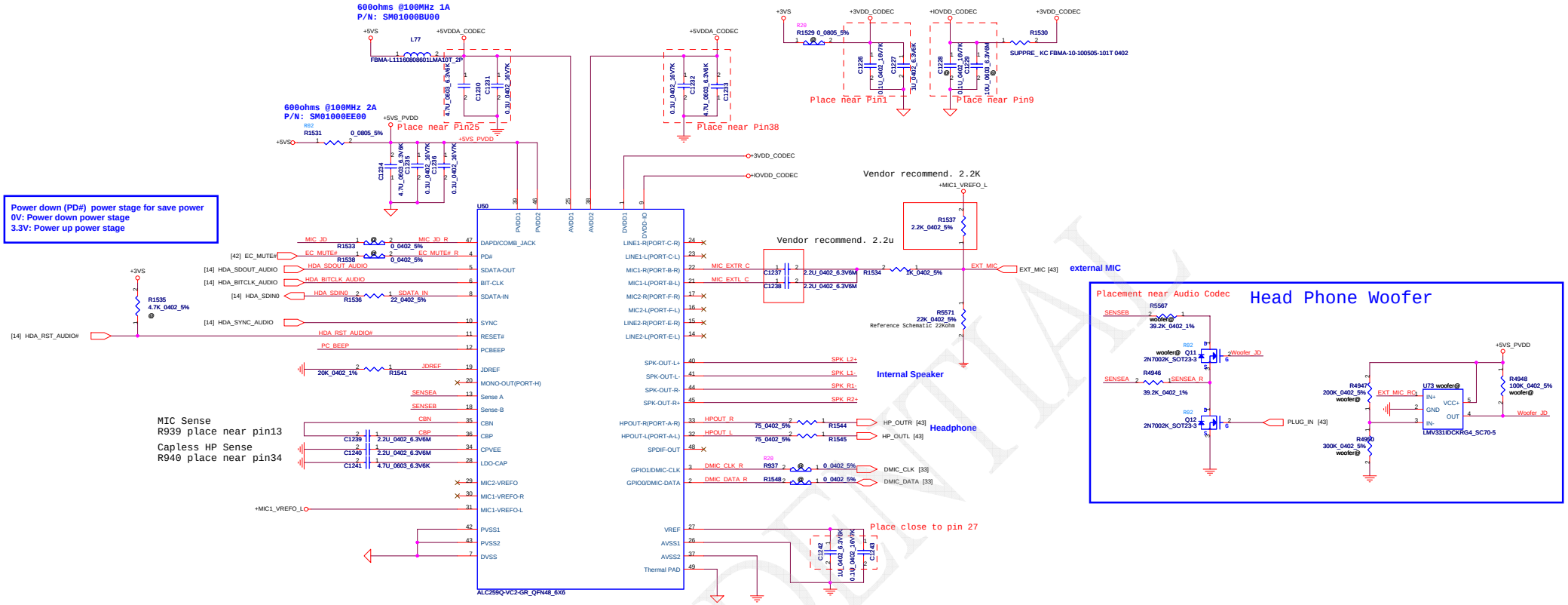

Pin Assignment	Location	Function
SPK-OUT (Pin40/41/44/45)	Internal	Int Speaker
Capless HP-OUT (Pin32/33)	External	Headphone out
MIC1(Pin21/22)	External	Mic in

wide 25MIL

SPK L+L-R+R- trace width
Speaker 4 ohm ==>40 mils
Speaker 8 ohm ==>20 mils

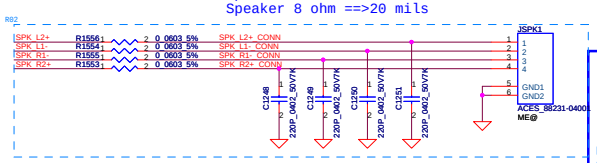

Combo Jack detect (normal open)

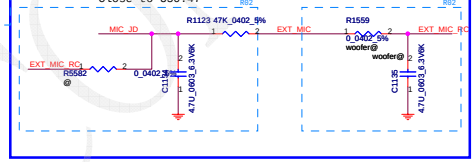

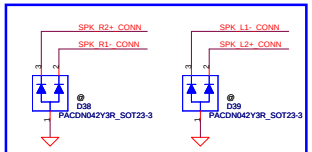

Reserve for ESD request.

PC Beep

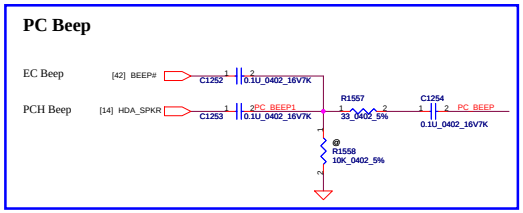

Security Classification	Compal Secret Data		
Issued Date	2011/07/21	Deciphered Date	2012/12/31

THIS SHEET OF ENGINEERING DRAWING IS THE PROPRIETARY PROPERTY OF COMPAL ELECTRONICS, INC. AND CONTAINS CONFIDENTIAL AND TRADE SECRET INFORMATION. THIS SHEET MAY NOT BE TRANSFERED FROM THE CUSTODY OF THE COMPETENT DIVISION OF R&D DEPARTMENT EXCEPT AS AUTHORIZED BY COMPAL ELECTRONICS, INC. NEITHER THIS SHEET NOR THE INFORMATION IT CONTAINS MAY BE USED BY OR DISCLOSED TO ANY THIRD PARTY WITHOUT PRIOR WRITTEN CONSENT OF COMPAL ELECTRONICS, INC.

Compal Electronics,Ltd.

Title: SCHEMATICS,MB A9061

Size: | Document Number: 4019K3 | Rev: C

Date: Monday, December 17, 2012 | Sheet 41 of 63

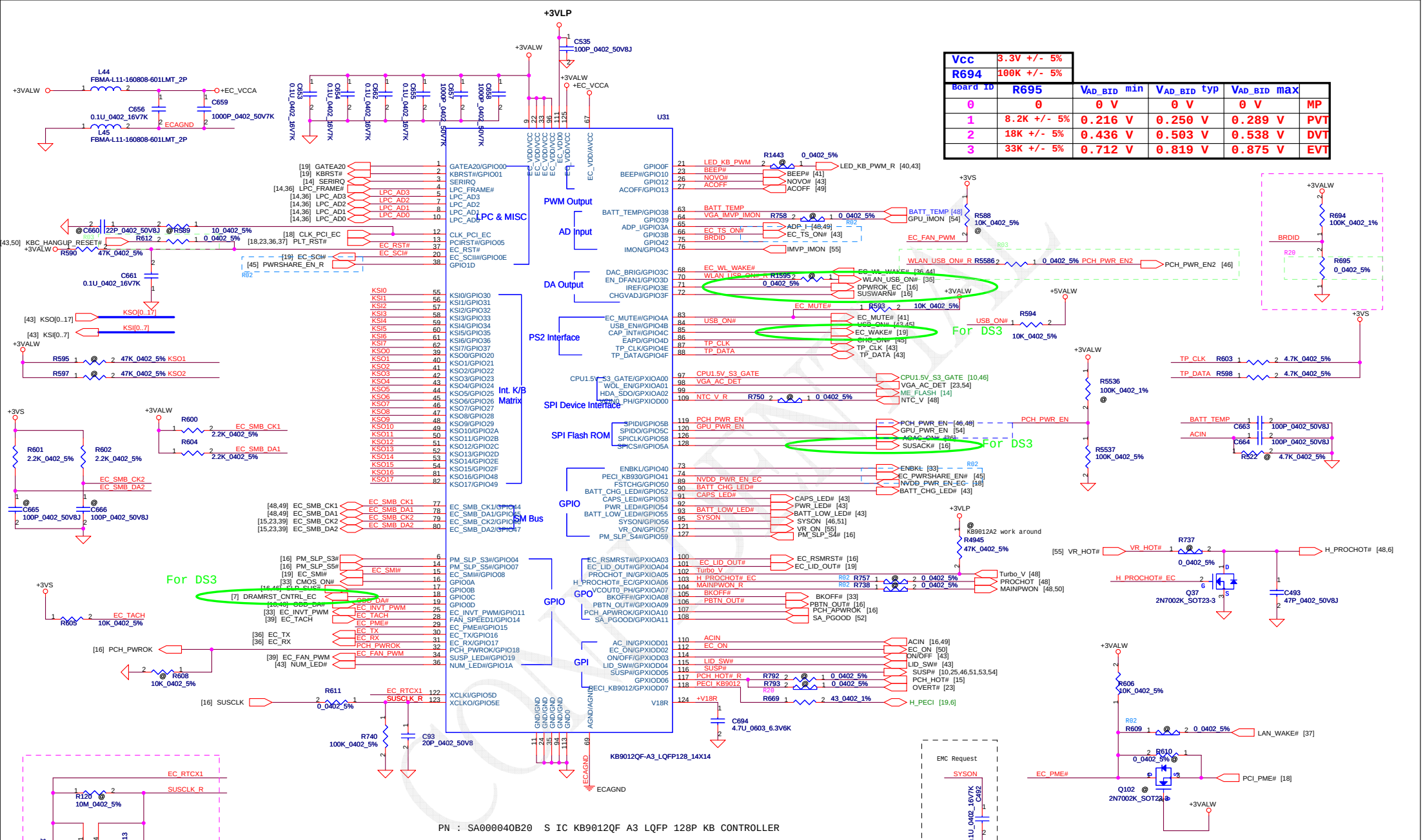

Vcc	3.3V +/- 5%				
R694	100K +/- 5%				
Board ID	R695	V_{AD_BID} min	V_{AD_BID} typ	V_{AD_BID} max	
0	0	0 V	0 V	0 V	MP
1	8.2K +/- 5%	0.216 V	0.250 V	0.289 V	PVT
2	18K +/- 5%	0.436 V	0.503 V	0.538 V	DVT
3	33K +/- 5%	0.712 V	0.819 V	0.875 V	EVT

Security Classification	Compal Secret Data		
Issued Date	2011/06/15	Deciphered Date	2012/07/11

THIS SHEET OF ENGINEERING DRAWING IS THE PROPRIETARY PROPERTY OF COMPAL ELECTRONICS, INC. AND CONTAINS CONFIDENTIAL AND TRADE SECRET INFORMATION. THIS SHEET MAY NOT BE TRANSFERED FROM THE CUSTODY OF THE COMPETENT DIVISION OF R&D DEPARTMENT EXCEPT AS AUTHORIZED BY COMPAL ELECTRONICS, INC. NEITHER THIS SHEET NOR THE INFORMATION IT CONTAINS MAY BE USED BY OR DISCLOSED TO ANY THIRD PARTY WITHOUT PRIOR WRITTEN CONSENT OF COMPAL ELECTRONICS, INC.

Compal Electronics, Inc.

Title: SCHEMATICS,MB A9061

Size: Custom | Document Number: 4019K3 | Rev: C

Date: Monday, December 17, 2012 | Sheet 42 of 63

ON/OFF switch

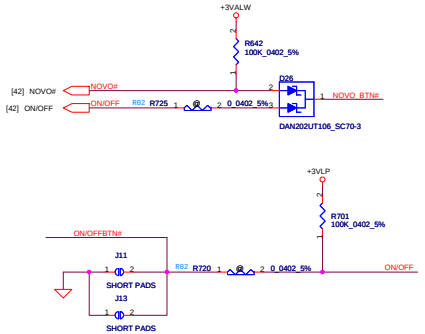

K/B Connector

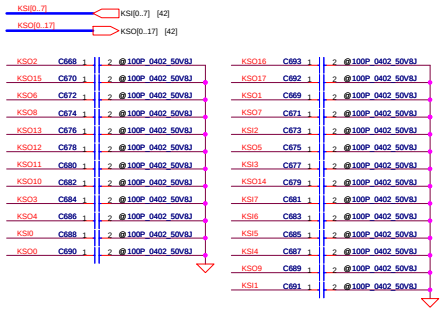

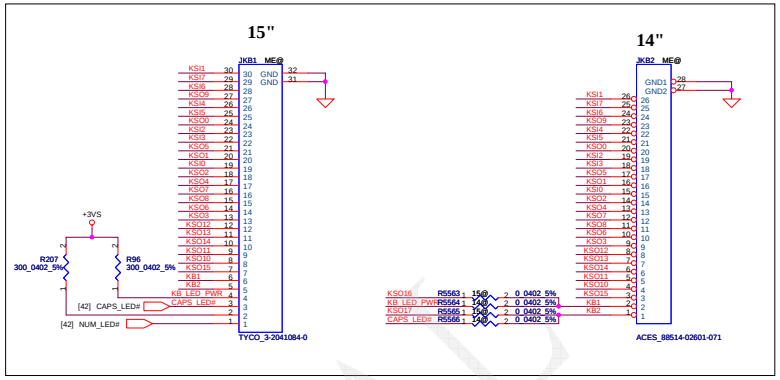

TP/B Connector

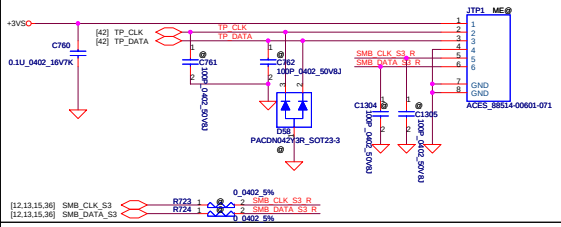

PWR/B Connector

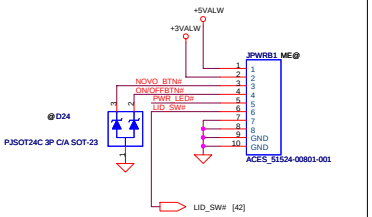

USB I/O Connector

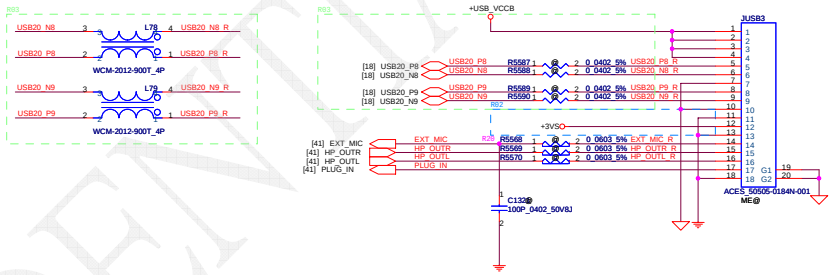

LED (For 14")

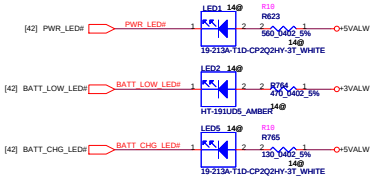

LED (For 15")

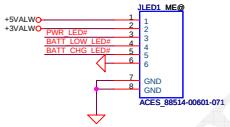

Right Side USB2.0 Port X 2 (USB/B)

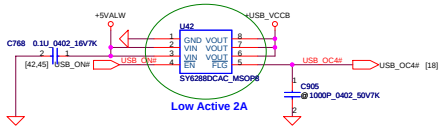

EC RESEST function

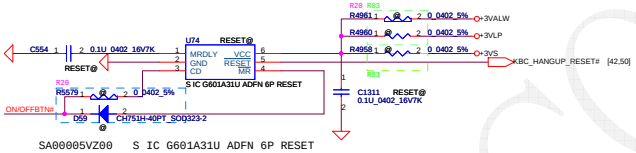

Touch Screen

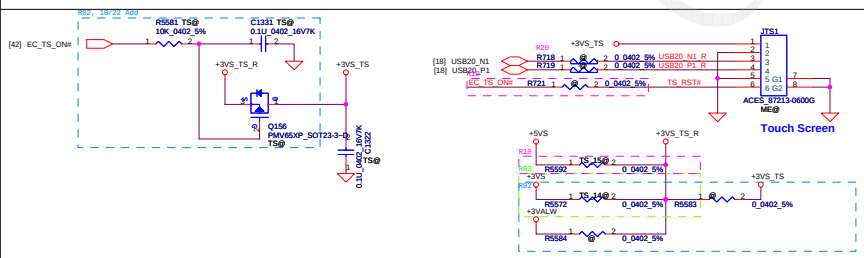

KB Lighting CONN.4pin

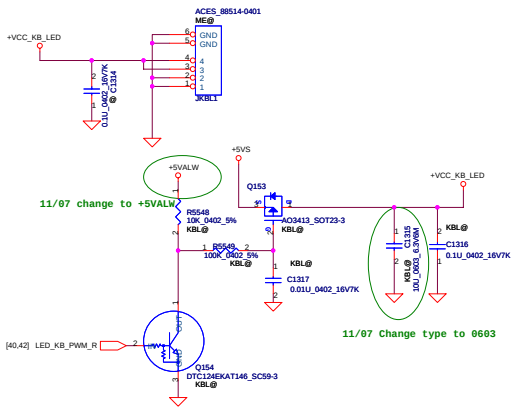

Security Classification	Compal Secret Data		
Issued Date	2011/06/15	Deciphered Date	2012/07/11

Title: **SCHEMATICS,MB A9061**

Compal Electronics, Inc.

Size: Custom | Document Number: 4019K3 | Rev: C

Date: Monday, December 17, 2012 | Sheet 43 of 63

THIS SHEET OF ENGINEERING DRAWING IS THE PROPRIETARY PROPERTY OF COMPAL ELECTRONICS, INC. AND CONTAINS CONFIDENTIAL AND TRADE SECRET INFORMATION. THIS SHEET MAY NOT BE TRANSFERRED FROM THE CUSTODY OF THE COMPETENT DIVISION OF R&D DEPARTMENT EXCEPT AS AUTHORIZED BY COMPAL ELECTRONICS, INC. NEITHER THIS SHEET NOR THE INFORMATION IT CONTAINS MAY BE USED BY OR DISCLOSED TO ANY THIRD PARTY WITHOUT PRIOR WRITTEN CONSENT OF COMPAL ELECTRONICS, INC.

CONFIDENTIAL

RTS5178 CardReader

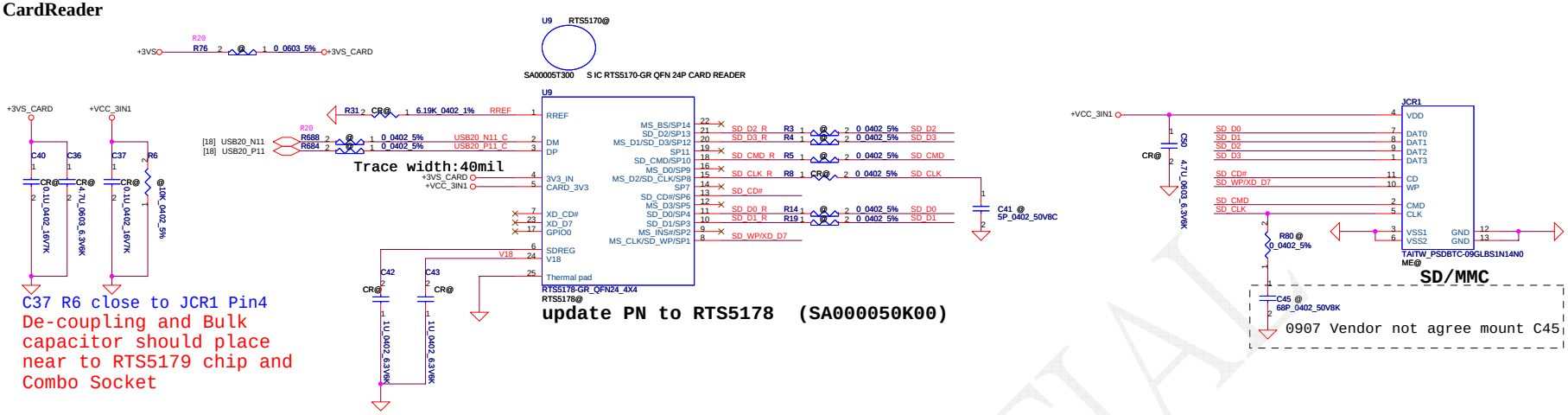

Green Clock

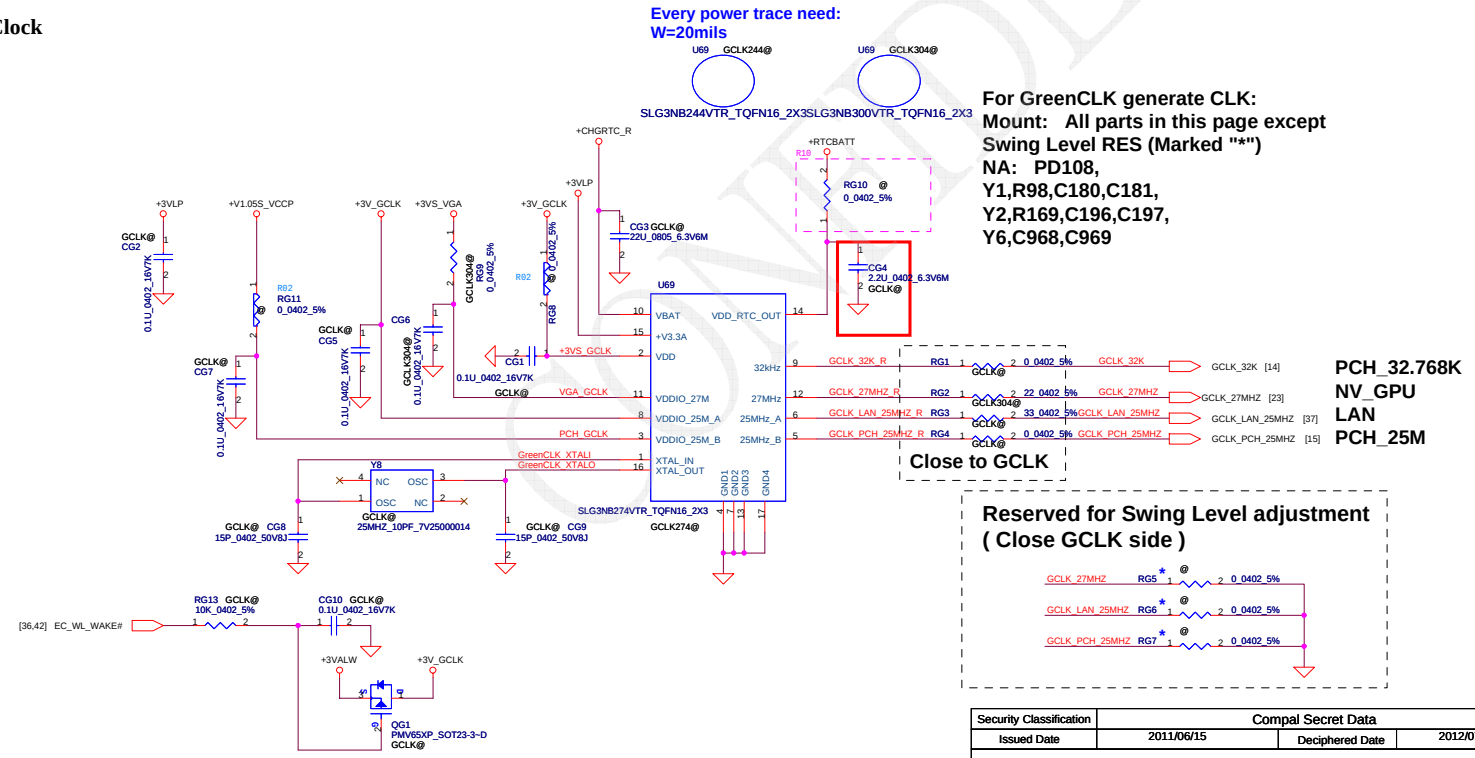

Security Classification	Compal Secret Data			Compal Electronics, Inc.
Issued Date	2011/06/15	Deciphered Date	2012/07/11	Title: SCHEMATICS,MB A9061

THIS SHEET OF ENGINEERING DRAWING IS THE PROPRIETARY PROPERTY OF COMPAL ELECTRONICS, INC. AND CONTAINS CONFIDENTIAL AND TRADE SECRET INFORMATION. THIS SHEET MAY NOT BE TRANSFERED FROM THE CUSTODY OF THE COMPETENT DIVISION OF R&D DEPARTMENT EXCEPT AS AUTHORIZED BY COMPAL ELECTRONICS, INC. NEITHER THIS SHEET NOR THE INFORMATION IT CONTAINS MAY BE USED BY OR DISCLOSED TO ANY THIRD PARTY WITHOUT PRIOR WRITTEN CONSENT OF COMPAL ELECTRONICS, INC.

Size	Document Number	Rev
C	4019K3	C

Date: Monday, December 17, 2012 Sheet 44 of 63

CONFIDENTIAL

LEFT SIDE USB3.0 PORT X1

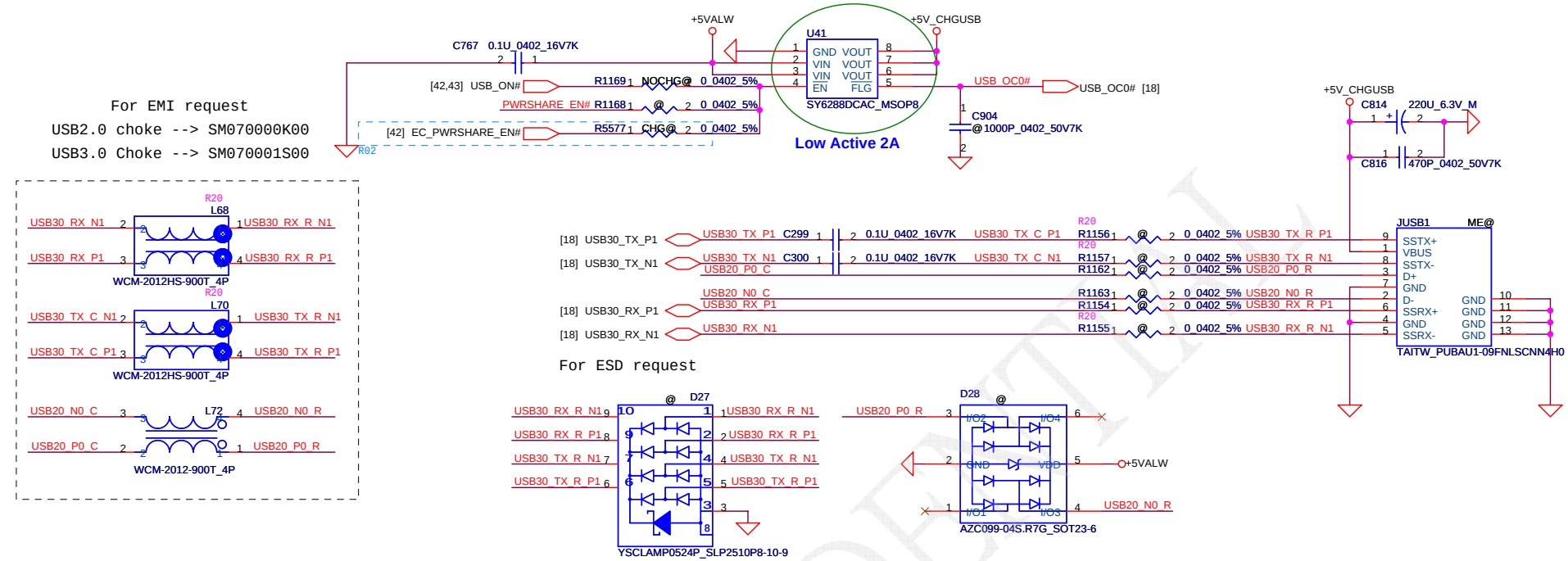

Left Side Charger USB3.0 Port

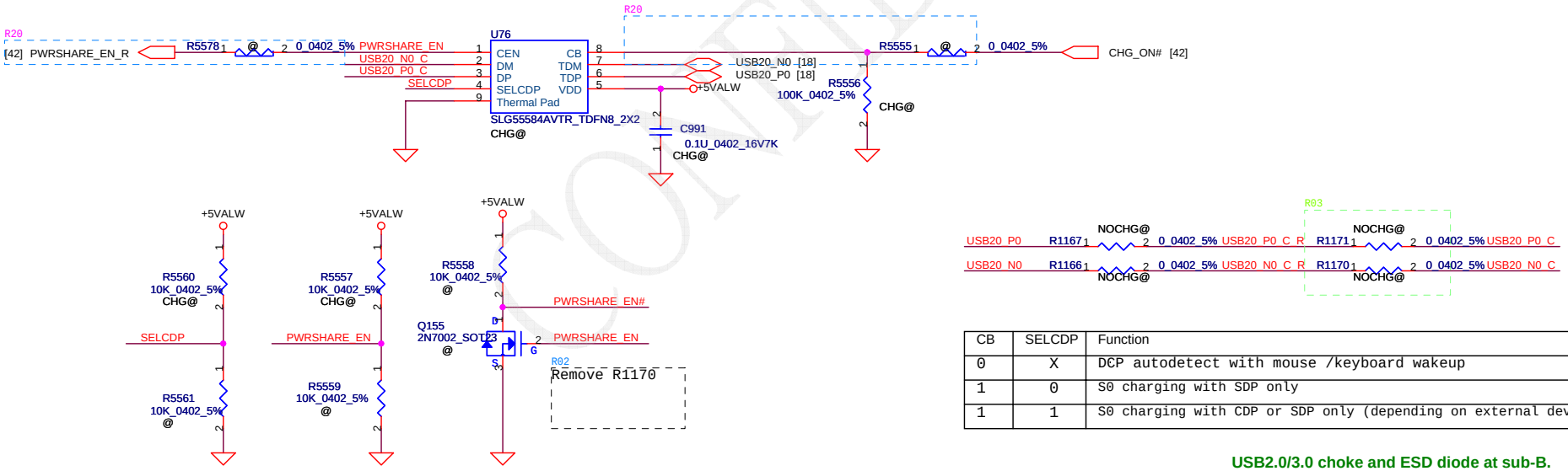

CB	SELCDP	Function
0	X	DCP autodetect with mouse /keyboard wakeup
1	0	S0 charging with SDP only
1	1	S0 charging with CDP or SDP only (depending on external device)

USB2.0/3.0 choke and ESD diode at sub-B.

CONFIDENTIAL

Security Classification	Compal Secret Data		
Issued Date	2011/06/15	Deciphered Date	2012/07/11

THIS SHEET OF ENGINEERING DRAWING IS THE PROPRIETARY PROPERTY OF COMPAL ELECTRONICS, INC. AND CONTAINS CONFIDENTIAL AND TRADE SECRET INFORMATION. THIS SHEET MAY NOT BE TRANSFERED FROM THE CUSTODY OF THE COMPETENT DIVISION OF R&D DEPARTMENT EXCEPT AS AUTHORIZED BY COMPAL ELECTRONICS, INC. NEITHER THIS SHEET NOR THE INFORMATION IT CONTAINS MAY BE USED BY OR DISCLOSED TO ANY THIRD PARTY WITHOUT PRIOR WRITTEN CONSENT OF COMPAL ELECTRONICS, INC.

Title: **SCHEMATICS,MB A9061**

Size: Custom | Document Number | Rev: C

Date: Monday, December 17, 2012 | Sheet 45 of 63

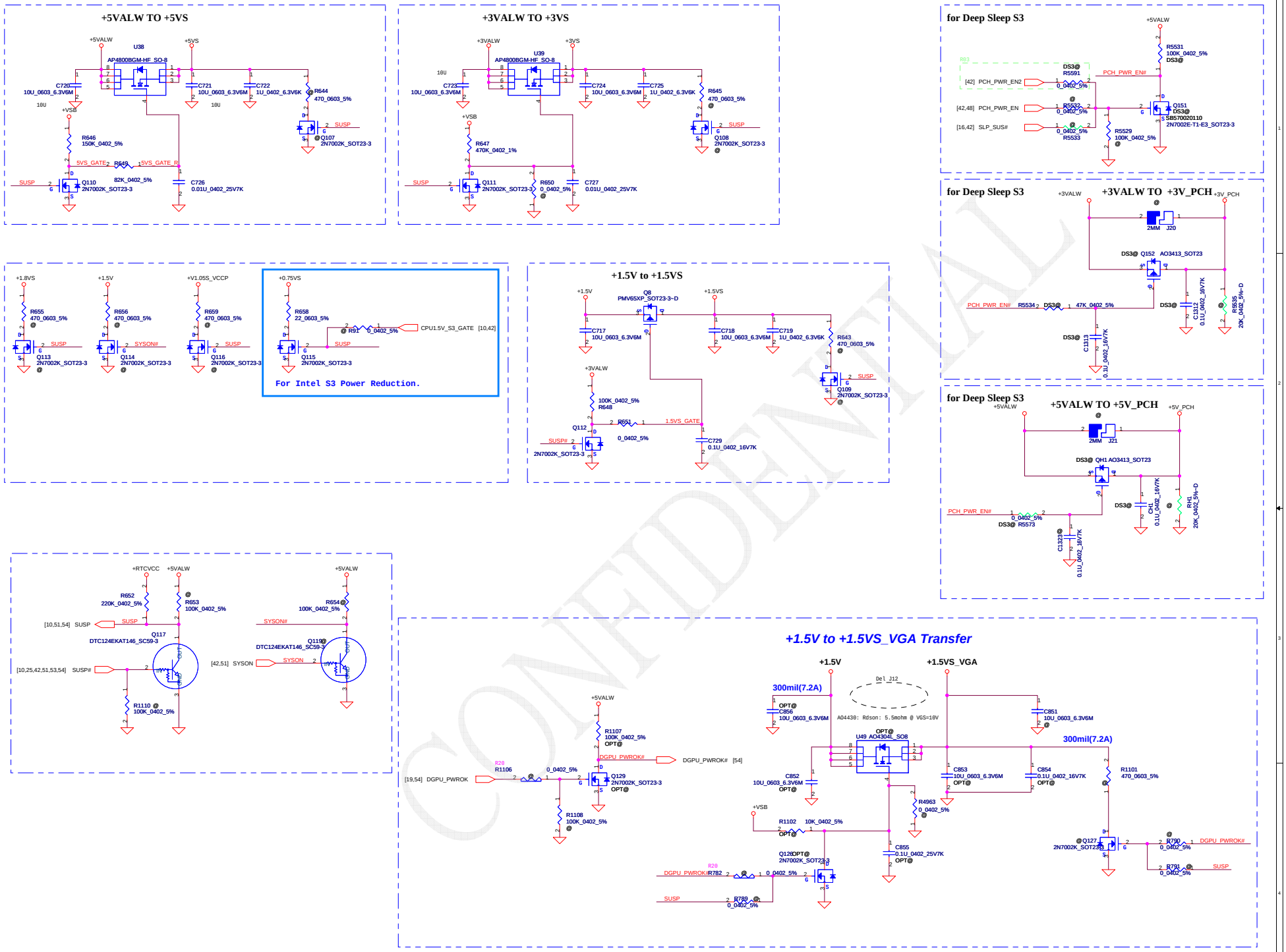

CONFIDENTIAL

Security Classification	Compal Secret Data		
Issued Date	2011/06/15	Deciphered Date	2012/07/11

THIS SHEET OF ENGINEERING DRAWING IS THE PROPRIETARY PROPERTY OF COMPAL ELECTRONICS, INC. AND CONTAINS CONFIDENTIAL AND TRADE SECRET INFORMATION. THIS SHEET MAY NOT BE TRANSFERED FROM THE CUSTODY OF THE COMPETENT DIVISION OF R&D DEPARTMENT EXCEPT AS AUTHORIZED BY COMPAL ELECTRONICS, INC. NEITHER THIS SHEET NOR THE INFORMATION IT CONTAINS MAY BE USED BY OR DISCLOSED TO ANY THIRD PARTY WITHOUT PRIOR WRITTEN CONSENT OF COMPAL ELECTRONICS, INC.

Compal Electronics, Inc.

Title: SCHEMATICS,MB A9061

Size: Custom | Document Number: 4019K3 | Rev: C

Date: Monday, December 17, 2012 | Sheet 46 of 63

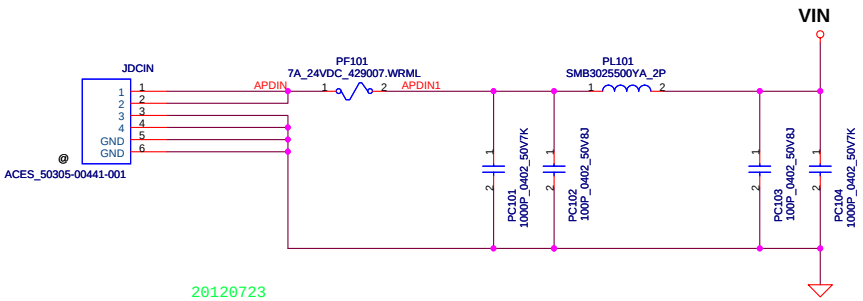

20120723
For all sku
1. Change PR108 to 150_0603_5% SD013150080 from 560_0603_5% SD013560080
Change PR109 to 1K_0603_5% SD013100180 from 560_0603_5% SD013560080

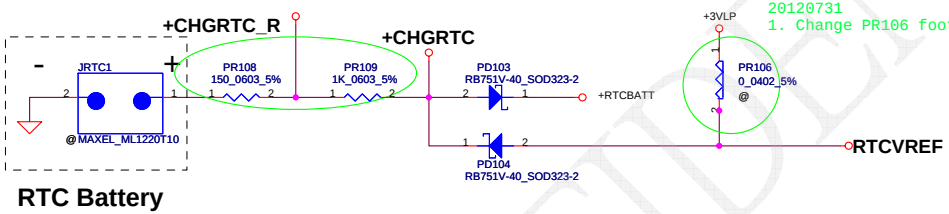

20120731
1. Change PR106 footprint to R0402_0ohm-NEW

20120731
1. Add PR110 SD013000080 0_0603_5%
Add PR111 SD013150080 150_0603_5%

CONFIDENTIAL

Security Classification	Compal Secret Data		
Issued Date	2010/01/25	Deciphered Date	2012/07/11

THIS SHEET OF ENGINEERING DRAWING IS THE PROPRIETARY PROPERTY OF COMPAL ELECTRONICS, INC. AND CONTAINS CONFIDENTIAL AND TRADE SECRET INFORMATION. THIS SHEET MAY NOT BE TRANSFERED FROM THE CUSTODY OF THE COMPETENT DIVISION OF R&D DEPARTMENT EXCEPT AS AUTHORIZED BY COMPAL ELECTRONICS, INC. NEITHER THIS SHEET NOR THE INFORMATION IT CONTAINS MAY BE USED BY OR DISCLOSED TO ANY THIRD PARTY WITHOUT PRIOR WRITTEN CONSENT OF COMPAL ELECTRONICS, INC.

Compal Electronics, Inc.

Title: **SCHEMATICS,MB A9061**

Size: Custom | Document Number: **Xz90** | Rev: C

Date: Monday, December 17, 2012 | Sheet 47 of 63

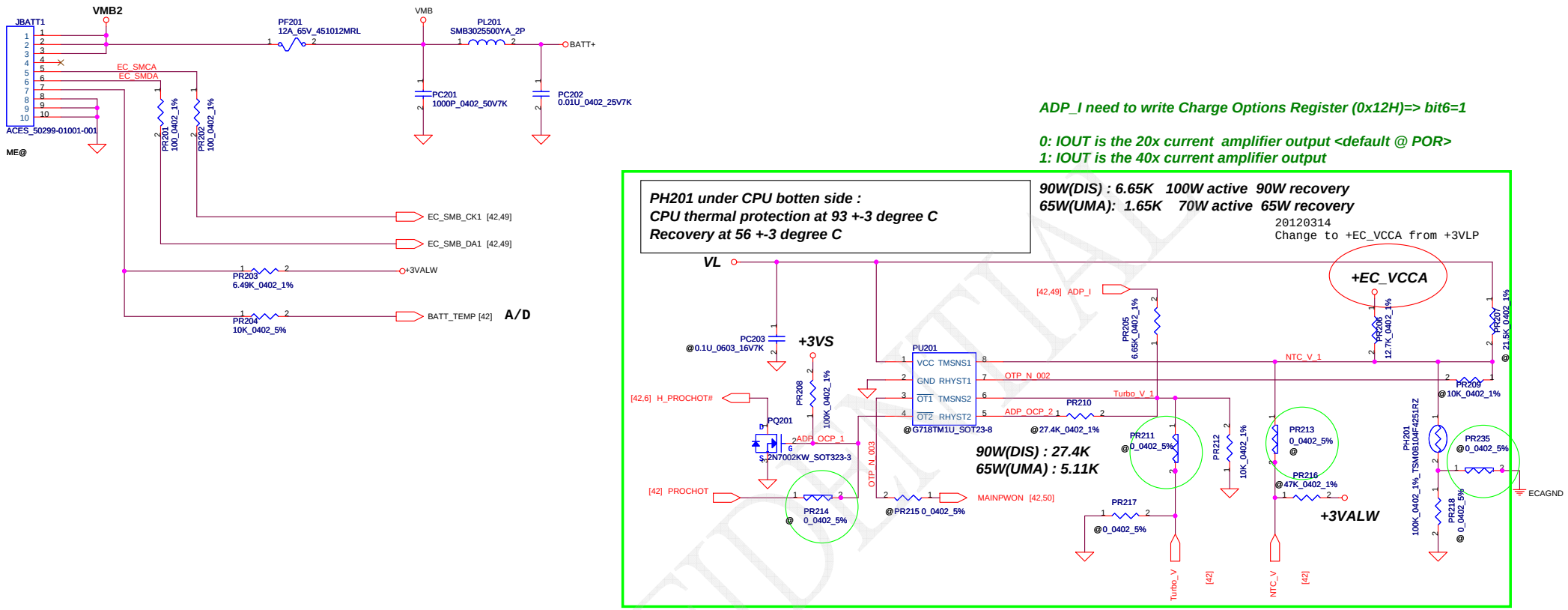

CONFIDENTIAL

Security Classification	Compal Secret Data		
Issued Date	2010/01/25	Deciphered Date	2012/07/11

THIS SHEET OF ENGINEERING DRAWING IS THE PROPRIETARY PROPERTY OF COMPAL ELECTRONICS, INC. AND CONTAINS CONFIDENTIAL AND TRADE SECRET INFORMATION. THIS SHEET MAY NOT BE TRANSFERED FROM THE CUSTODY OF THE COMPETENT DIVISION OF R&D DEPARTMENT EXCEPT AS AUTHORIZED BY COMPAL ELECTRONICS, INC. NEITHER THIS SHEET NOR THE INFORMATION IT CONTAINS MAY BE USED BY OR DISCLOSED TO ANY THIRD PARTY WITHOUT PRIOR WRITTEN CONSENT OF COMPAL ELECTRONICS, INC.

Compal Electronics, Inc.

Title: SCHEMATICS,MB A9061

Size: Custom | Document Number: Zx90 | Rev: C

Date: Monday, December 17, 2012 | Sheet 48 of 63

Need EC write ChargeOption() bit[8]=1
Setting (ACP to PHASE Rising Threshold)=1350mV(min)

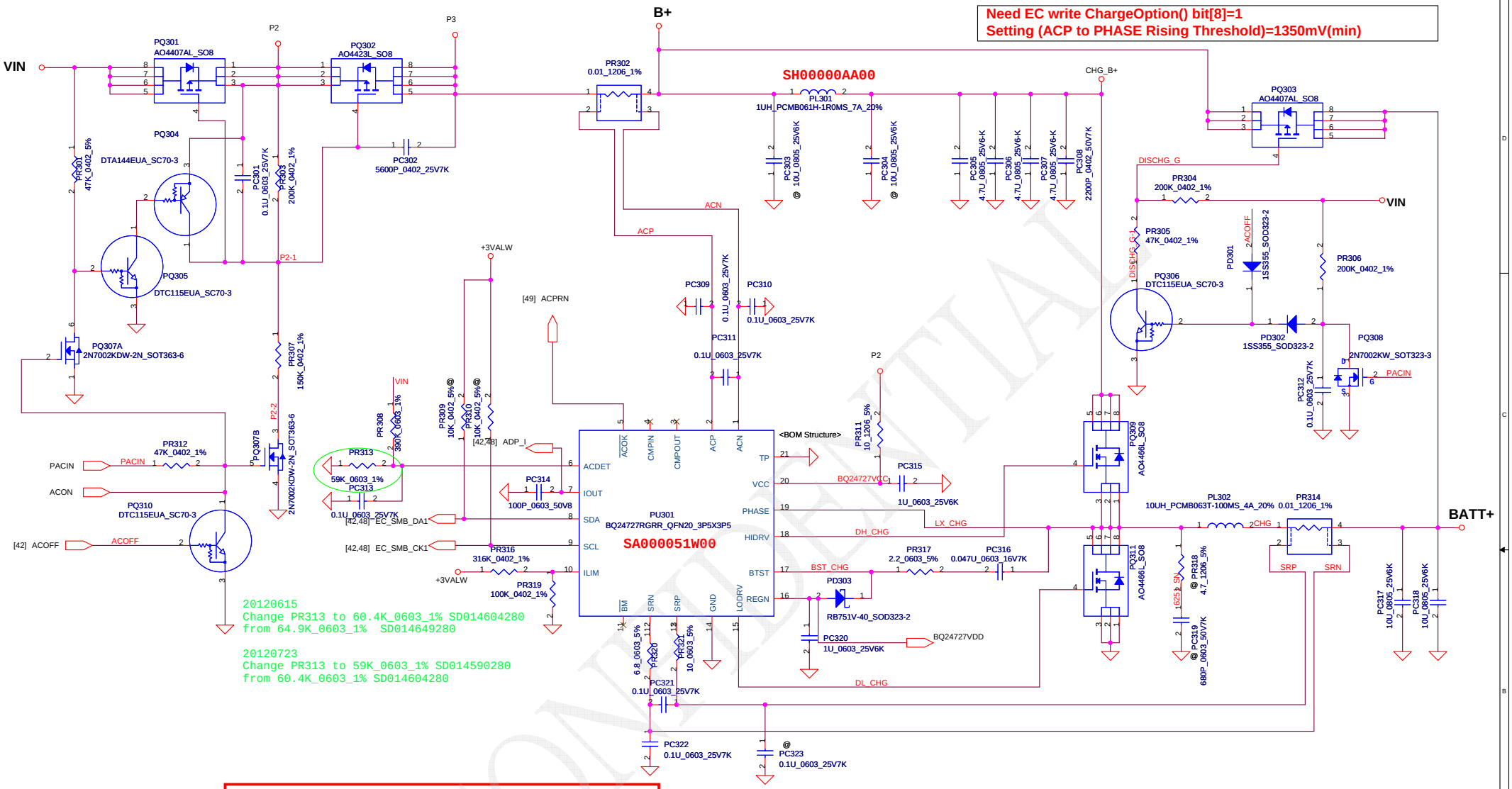

CONFIDENTIAL

Security Classification	Compal Secret Data		
Issued Date	2010/01/13	Deciphered Date	2012/07/11

THIS SHEET OF ENGINEERING DRAWING IS THE PROPRIETARY PROPERTY OF COMPAL ELECTRONICS, INC. AND CONTAINS CONFIDENTIAL AND TRADE SECRET INFORMATION. THIS SHEET MAY NOT BE TRANSFERED FROM THE CUSTODY OF THE COMPETENT DIVISION OF R&D DEPARTMENT EXCEPT AS AUTHORIZED BY COMPAL ELECTRONICS, INC. NEITHER THIS SHEET NOR THE INFORMATION IT CONTAINS MAY BE USED BY OR DISCLOSED TO ANY THIRD PARTY WITHOUT PRIOR WRITTEN CONSENT OF COMPAL ELECTRONICS, INC.

Compal Electronics, Inc.

Title: **CHARGER**

Size: | Document Number: **Zx90** | Rev: **C**

Date: Monday, December 17, 2012 | Sheet 49 of 63

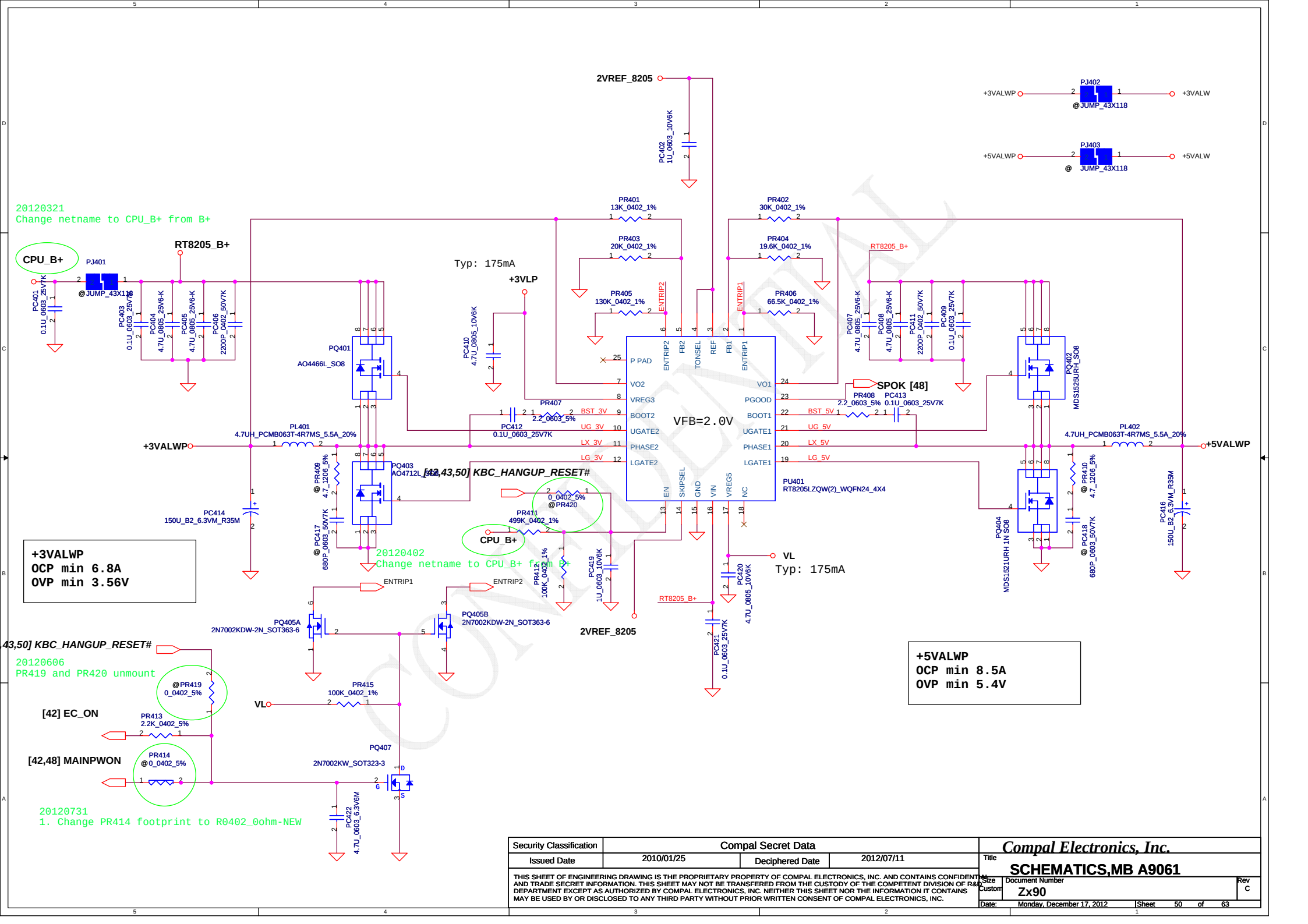

Security Classification	Compal Secret Data		
Issued Date	2010/01/25	Deciphered Date	2012/07/11

THIS SHEET OF ENGINEERING DRAWING IS THE PROPRIETARY PROPERTY OF COMPAL ELECTRONICS, INC. AND CONTAINS CONFIDENTIAL AND TRADE SECRET INFORMATION. THIS SHEET MAY NOT BE TRANSFERED FROM THE CUSTODY OF THE COMPETENT DIVISION OF R&D DEPARTMENT EXCEPT AS AUTHORIZED BY COMPAL ELECTRONICS, INC. NEITHER THIS SHEET NOR THE INFORMATION IT CONTAINS MAY BE USED BY OR DISCLOSED TO ANY THIRD PARTY WITHOUT PRIOR WRITTEN CONSENT OF COMPAL ELECTRONICS, INC.

Compal Electronics, Inc.

Title: SCHEMATICS,MB A9061

Size: Custom | Document Number: Zx90 | Rev: C

Date: Monday, December 17, 2012 | Sheet 50 of 63

STATE	S3	S5	1.5VP	VTT_REFP	0.75VSP
S0	Hi	Hi	On	On	On
S3	Lo	Hi	On	On	Off (Hi-Z)
S4/S5	Lo	Lo	Off	Off	Off
Note: S3 - sleep ; S5 - power off					

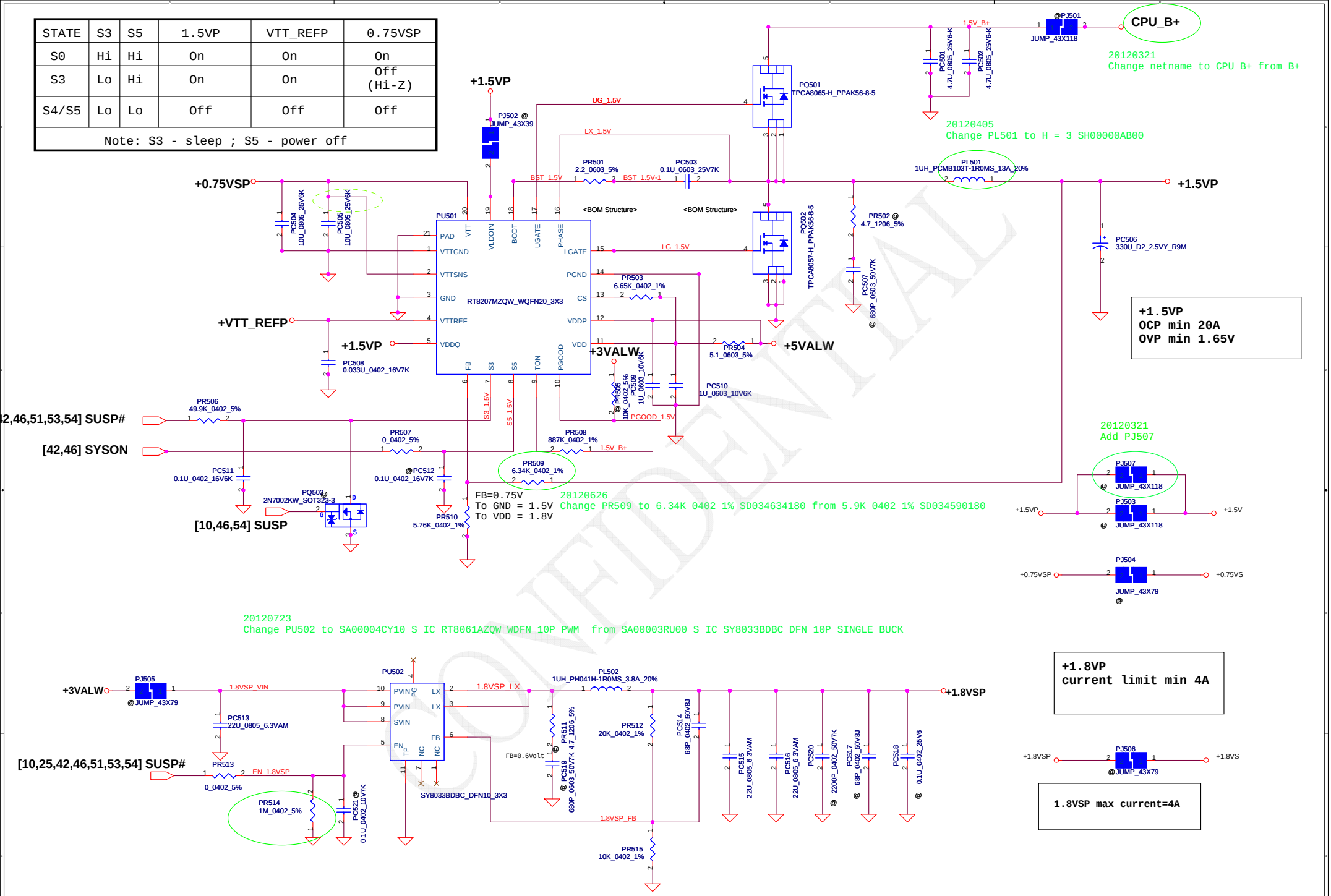

CONFIDENTIAL

Security Classification	Compal Secret Data		
Issued Date	2010/01/25	Deciphered Date	2012/07/11

THIS SHEET OF ENGINEERING DRAWING IS THE PROPRIETARY PROPERTY OF COMPAL ELECTRONICS, INC. AND CONTAINS CONFIDENTIAL AND TRADE SECRET INFORMATION. THIS SHEET MAY NOT BE TRANSFERED FROM THE CUSTODY OF THE COMPETENT DIVISION OF R&D DEPARTMENT EXCEPT AS AUTHORIZED BY COMPAL ELECTRONICS, INC. NEITHER THIS SHEET NOR THE INFORMATION IT CONTAINS MAY BE USED BY OR DISCLOSED TO ANY THIRD PARTY WITHOUT PRIOR WRITTEN CONSENT OF COMPAL ELECTRONICS, INC.

Compal Electronics, Inc.

Title: SCHEMATICS,MB A9061

Size: Custom | Document Number: Zx90 | Rev: C

Date: Monday, December 17, 2012 | Sheet 51 of 63

VID [0]	VID[1]	VCCSA Vout
0	0	0.9V
0	1	0.8V
1	0	0.725V
1	1	0.675V

output voltage adjustable network

+VCC_SAP
TDC 4.2A
Peak Current 6A
OCP current 7.2A
OVP 1.06V

The 1k PD on the VCCSA VIDs are empty. These should be stuffed to ensure that VCCSA VID is 00 prior to VCCIO stability.

20120731
1. Change PR605 footprint to R0402_0ohm-NEW

20120731
1. Change PR606 footprint to R0603_0ohm-NEW

20120411
Change PL601 footprint to PL302 footprint

20120731
1. Change PR611 footprint to R0402_0ohm-NEW

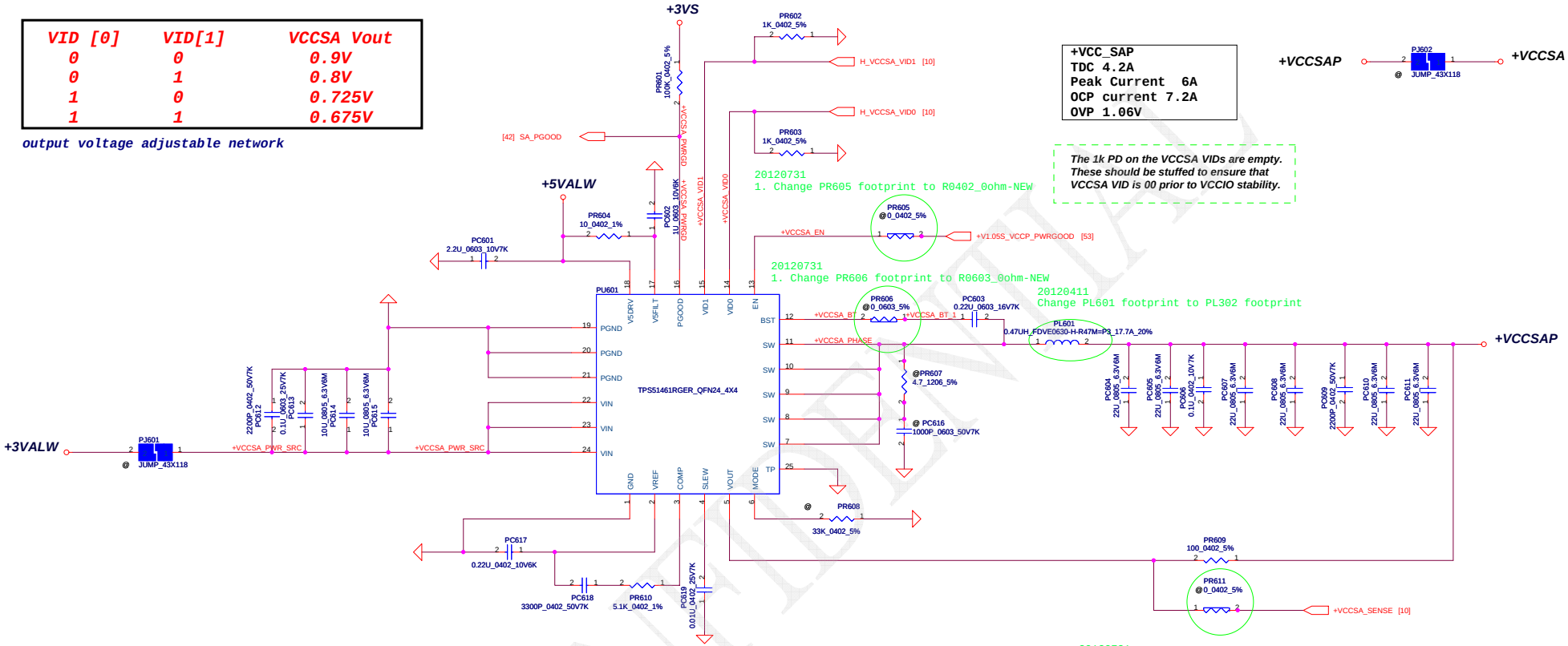

CONFIDENTIAL

Security Classification	Compal Secret Data		
Issued Date	2010/01/25	Deciphered Date	2012/07/11

THIS SHEET OF ENGINEERING DRAWING IS THE PROPRIETARY PROPERTY OF COMPAL ELECTRONICS, INC. AND CONTAINS CONFIDENTIAL AND TRADE SECRET INFORMATION. THIS SHEET MAY NOT BE TRANSFERED FROM THE CUSTODY OF THE COMPETENT DIVISION OF R&D DEPARTMENT EXCEPT AS AUTHORIZED BY COMPAL ELECTRONICS, INC. NEITHER THIS SHEET NOR THE INFORMATION IT CONTAINS MAY BE USED BY OR DISCLOSED TO ANY THIRD PARTY WITHOUT PRIOR WRITTEN CONSENT OF COMPAL ELECTRONICS, INC.

Compal Electronics, Inc.

Title: SCHEMATICS,MB A9061

Size: C | Document Number: Zx90 | Rev: C

Date: Monday, December 17, 2012 | Sheet 52 of 63

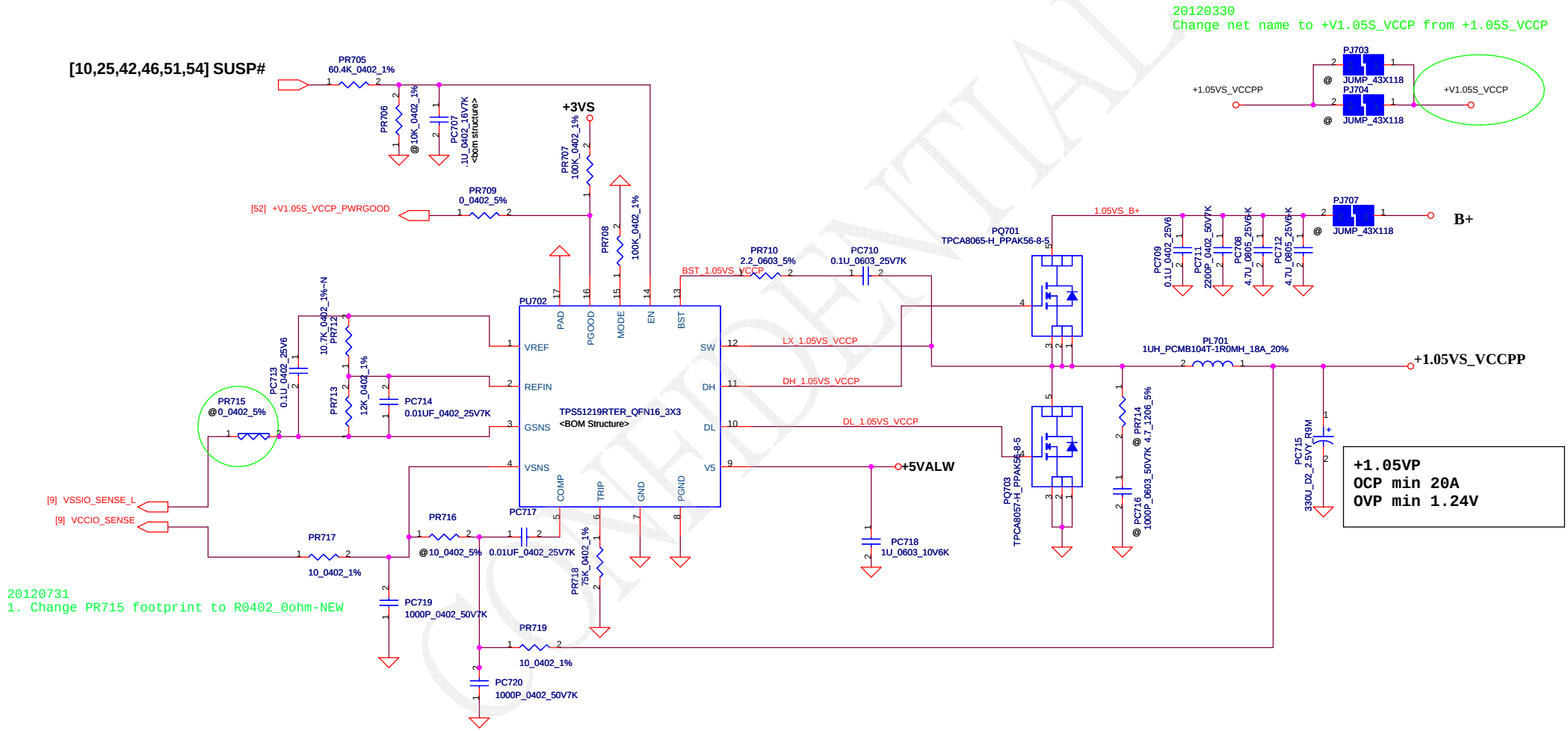

CONFIDENTIAL

Security Classification	Compal Secret Data		
Issued Date	2010/01/25	Deciphered Date	2012/07/11

THIS SHEET OF ENGINEERING DRAWING IS THE PROPRIETARY PROPERTY OF COMPAL ELECTRONICS, INC. AND CONTAINS CONFIDENTIAL AND TRADE SECRET INFORMATION. THIS SHEET MAY NOT BE TRANSFERED FROM THE CUSTODY OF THE COMPETENT DIVISION OF R&D DEPARTMENT EXCEPT AS AUTHORIZED BY COMPAL ELECTRONICS, INC. NEITHER THIS SHEET NOR THE INFORMATION IT CONTAINS MAY BE USED BY OR DISCLOSED TO ANY THIRD PARTY WITHOUT PRIOR WRITTEN CONSENT OF COMPAL ELECTRONICS, INC.

Compal Electronics, Inc.

Title: **SCHEMATICS,MB A9061**

Size: Custom | Document Number: **Zx90** | Rev: C

Date: Monday, December 17, 2012 | Sheet 53 of 63

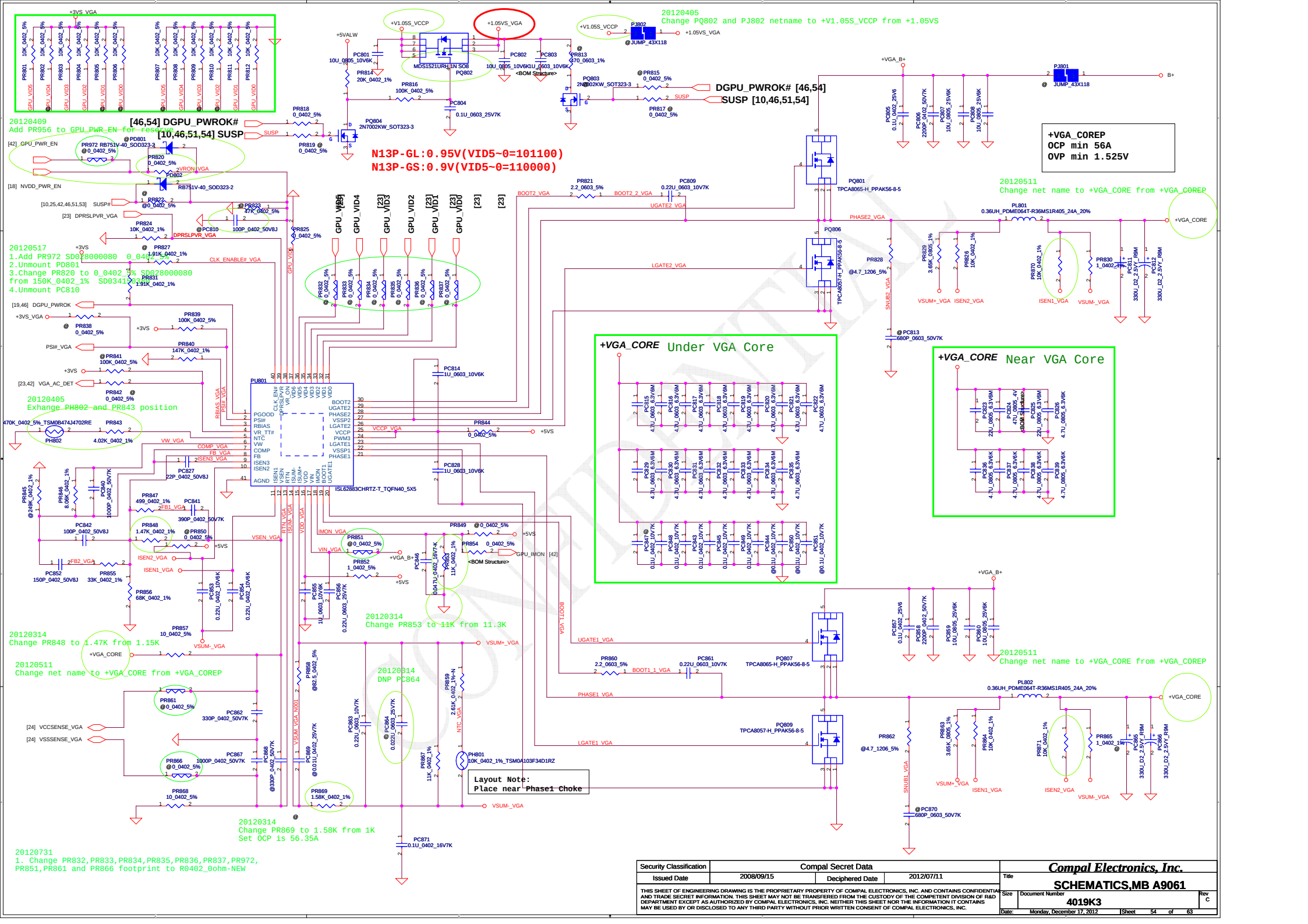

Security Classification	Compal Secret Data		
Issued Date	2008/09/15	Deciphered Date	2012/07/11

THIS SHEET OF ENGINEERING DRAWING IS THE PROPRIETARY PROPERTY OF COMPAL ELECTRONICS, INC. AND CONTAINS CONFIDENTIAL AND TRADE SECRET INFORMATION. THIS SHEET MAY NOT BE TRANSFERRED FROM THE CUSTODY OF THE COMPETENT DIVISION OF R&D DEPARTMENT EXCEPT AS AUTHORIZED BY COMPAL ELECTRONICS, INC. NEITHER THIS SHEET NOR THE INFORMATION IT CONTAINS MAY BE USED BY OR DISCLOSED TO ANY THIRD PARTY WITHOUT PRIOR WRITTEN CONSENT OF COMPAL ELECTRONICS, INC.

Compal Electronics, Inc.

Title: **SCHEMATICS,MB A9061**

Size: | Document Number: **4019K3** | Rev: C

Date: Monday, December 17, 2012 | Sheet 54 of 63

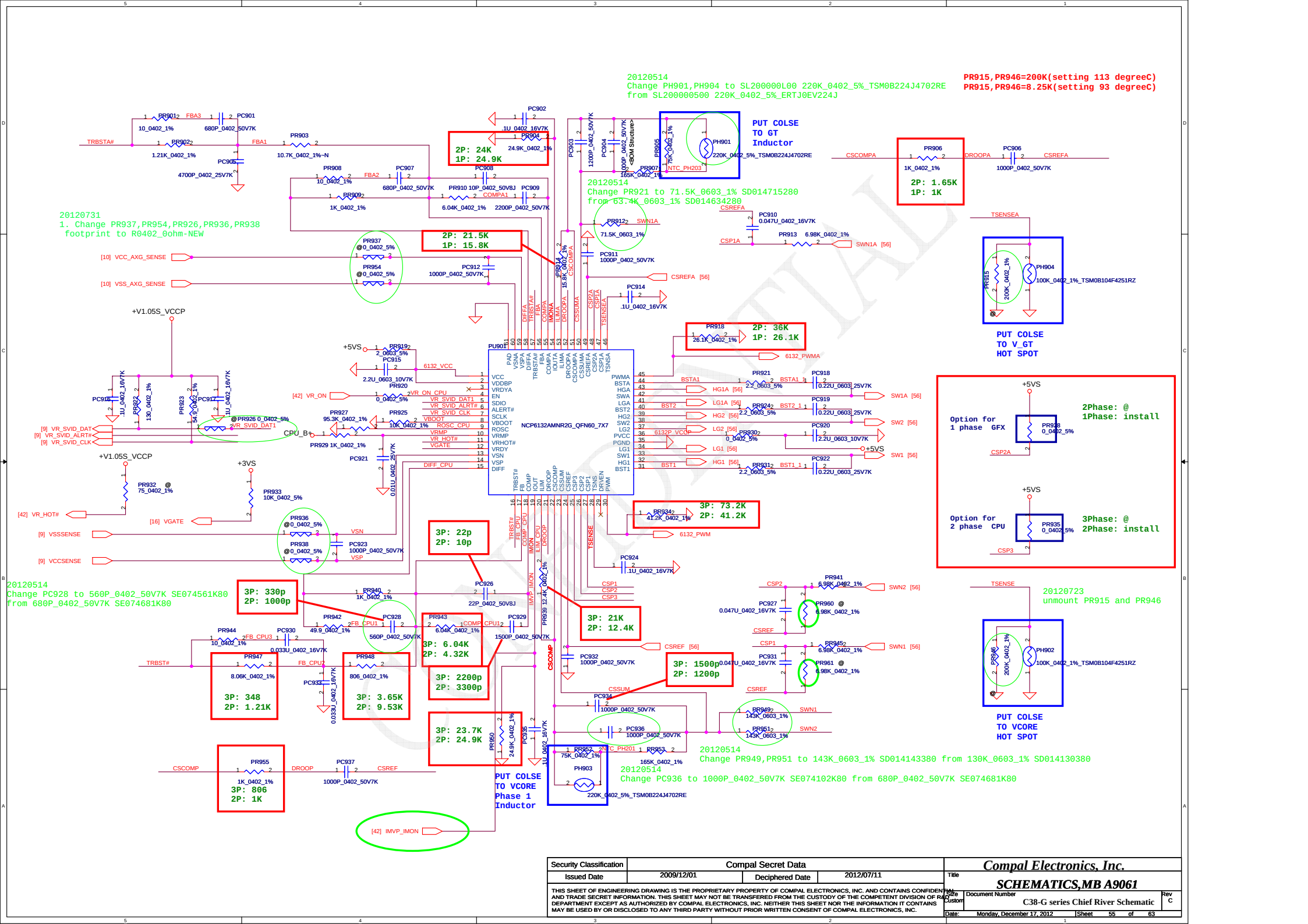

Security Classification	Compal Secret Data		
Issued Date	2009/12/01	Deciphered Date	2012/07/11

THIS SHEET OF ENGINEERING DRAWING IS THE PROPRIETARY PROPERTY OF COMPAL ELECTRONICS, INC. AND CONTAINS CONFIDENTIAL AND TRADE SECRET INFORMATION. THIS SHEET MAY NOT BE TRANSFERED FROM THE CUSTODY OF THE COMPETENT DIVISION OF RAD DEPARTMENT EXCEPT AS AUTHORIZED BY COMPAL ELECTRONICS, INC. NEITHER THIS SHEET NOR THE INFORMATION IT CONTAINS MAY BE USED BY OR DISCLOSED TO ANY THIRD PARTY WITHOUT PRIOR WRITTEN CONSENT OF COMPAL ELECTRONICS, INC.

Compal Electronics, Inc.

Title: **SCHEMATICS,MB A9061**

Size: Custom | Document Number: C38-G series Chief River Schematic | Rev: C

Date: Monday, December 17, 2012 | Sheet 55 of 63

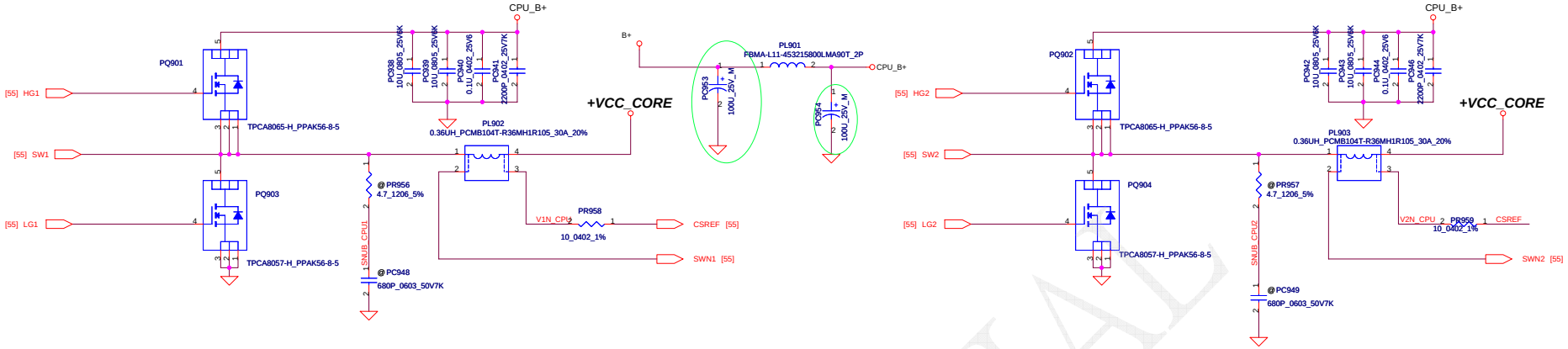

DC 35W CPU
VID1=1.05V
IccMax=53A
Icc_Dyn=43A
Icc_TDC=36A
R_LL=1.9m ohm
OCP~65A

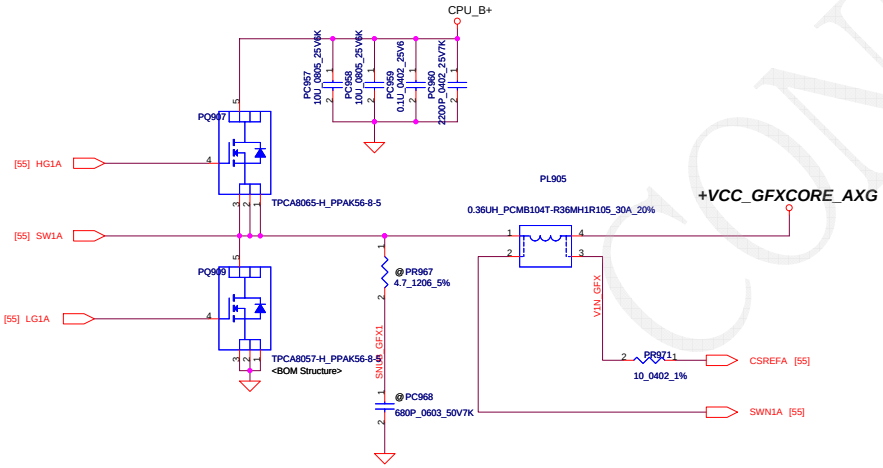

DC 35W GT2
VID1=1.23V
IccMax=33A
Icc_Dyn=20.2A
Icc_TDC=21.5A
R_LL=3.9m ohm
OCP~40A

Security Classification	Compal Secret Data		
Issued Date	2009/12/01	Deciphered Date	2012/07/11

THIS SHEET OF ENGINEERING DRAWING IS THE PROPRIETARY PROPERTY OF COMPAL ELECTRONICS, INC. AND CONTAINS CONFIDENTIAL AND TRADE SECRET INFORMATION. THIS SHEET MAY NOT BE TRANSFERED FROM THE CUSTODY OF THE COMPETENT DIVISION OF R&D DEPARTMENT EXCEPT AS AUTHORIZED BY COMPAL ELECTRONICS, INC. NEITHER THIS SHEET NOR THE INFORMATION IT CONTAINS MAY BE USED BY OR DISCLOSED TO ANY THIRD PARTY WITHOUT PRIOR WRITTEN CONSENT OF COMPAL ELECTRONICS, INC.

Compal Electronics, Inc.

Title: SCHEMATICS,MB A9061

Size: C | Document Number: C38-G series Chief River Schematic | Rev: C

Date: Monday, December 17, 2012 | Sheet 56 of 63

CONFIDENTIAL

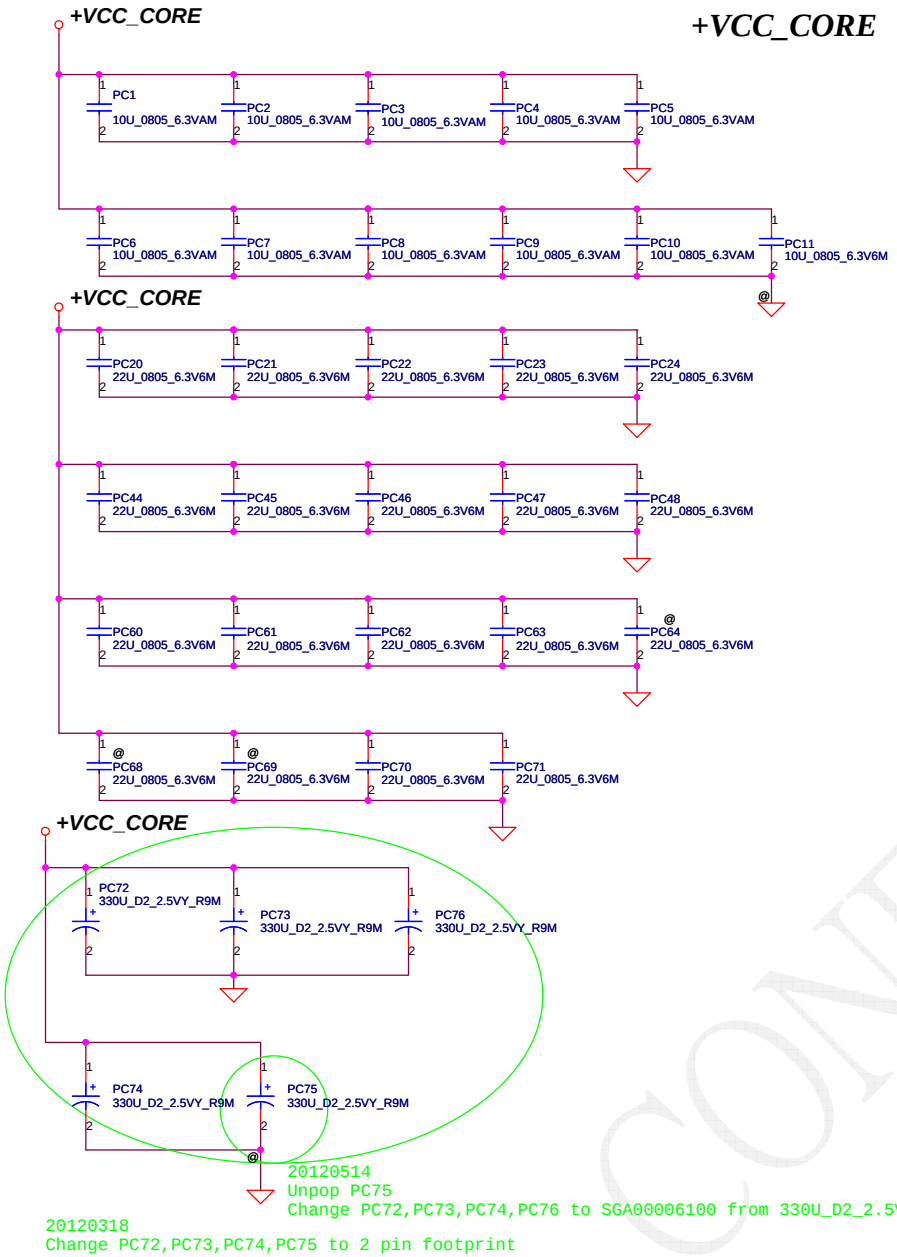

20120514
Unpop PC75
Change PC72,PC73,PC74,PC76 to SGA00006100 from 330U_D2_2.5VY_R9M SGA00002680

20120318
Change PC72,PC73,PC74,PC75 to 2 pin footprint

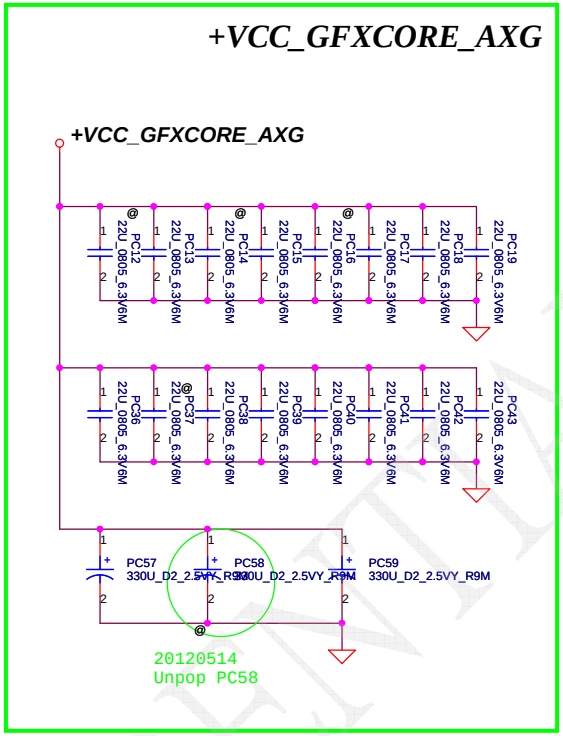

20120514
Unpop PC58

Below is 458544_CRV_PDDG_0.5 Table 5-8.

Socket Bottom	5 x 22 µF (0805) 5 x (0805) no-stuff sites
Socket Top	7 x 22 µF (0805) 2 x (0805) no-stuff sites

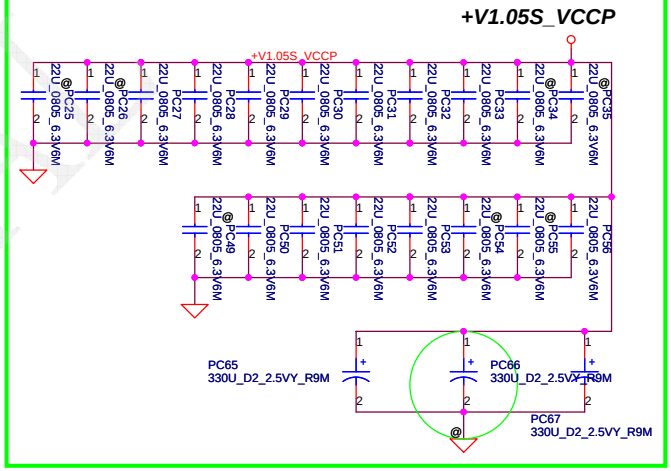

20120514
Unpop PC66

CONFIDENTIAL

Security Classification	Compal Secret Data		
Issued Date	2008/09/15	Deciphered Date	2012/07/11

THIS SHEET OF ENGINEERING DRAWING IS THE PROPRIETARY PROPERTY OF COMPAL ELECTRONICS, INC. AND CONTAINS CONFIDENTIAL AND TRADE SECRET INFORMATION. THIS SHEET MAY NOT BE TRANSFERED FROM THE CUSTODY OF THE COMPETENT DIVISION OF R&D DEPARTMENT EXCEPT AS AUTHORIZED BY COMPAL ELECTRONICS, INC. NEITHER THIS SHEET NOR THE INFORMATION IT CONTAINS MAY BE USED BY OR DISCLOSED TO ANY THIRD PARTY WITHOUT PRIOR WRITTEN CONSENT OF COMPAL ELECTRONICS, INC.

Compal Electronics, Inc.

Title: **SCHEMATICS,MB A9061**

Size | Document Number: *4019K3* | Rev: C

Date: Monday, December 17, 2012 | Sheet 57 of 63

Version change list (P.I.R. List)

for PWR

Item	Reason for change	PG#	Modify List	Date	Phase
1	For EC net name	P48	PR206 change pull high voltage to +EC_VCCA from +3VLP	20120316	EVT
2	Intersil advise	P54	1.Change PR848 to 1.47K SD000009480 from 1.15K 2.Unmount PC864	20120316	EVT
3	VGA IMON setting	P54	Change PR853 to 11K SD034110280 from 11.3K	20120316	EVT
4	set OCP is 56A	P54	Change PR869 to 1.58K (SD00000SJ80) from 1K	20120316	EVT
5	For 1.5V current	P51	Add PJ507 for 1.5V	20120321	EVT
6	For B+ layout	P55 P50 P51 P50	1.Change PC954 pull high to CPU_B+ from B+ 2.Change 3/5VALWP B+ input netname to CPU_B+ 3.Change 1.5VALWP B+ input netname to CPU_B+ 4.Change PR411 netname to CPU_B+ from B+	20120321	EVT
7	For HW net name	P53 P54	1.Change +1.05S_VCCP netname to +V1.05S_VCCP 2.Change PQ802.5 netname to +V1.05S_VCCP from +1.05VS	20120330	EVT
8	For HW power sequence	P54	1.Add control PU801 pin GPU_PWR_EN and reserve PR956 0_0402_5% 2.Change PR820 to SD034150380 150K_0402_1% from 100K 3.Change PC810 to SE071101J80 100P_0402_50V8J from 0.1u	20120330	EVT
9	For Intersil advise	P54	Change PR853 pull down netname to gnd	20120409	EVT
10	For IMON design	P55	Change PU901 to NCP6132A from ISL95836	20120412	EVT
11	For layout design	P54	1.Del PJ803 PJ804 2.Change net name to VGACORE from VGACOREP	20120511	DVT
12	For 1.05V, GFX_CORE,CPU_CORE design fine tune	P57	Unpop PC58, PC66,PC75 330U_D2_2.5VY_R9M SGA00002680	20120514	DVT
13	For CPU_CORE design fine tune and ON advise	P57	Change PC72,PC73,PC74,PC76 to S POLY C 330U 2V M D2 ESR9M SGA00006100 from 330U_D2_2.5VY_R9M SGA00002680	20120514	DVT
14	For CPU_CORE design fine tune and ON advise	P55	1.Change PC928 to 560P_0402_50V7K SE074561K80 from 680P_0402_50V7K SE074681K80 2.Change PR949,PR951 to 140K from 130K 3.Change PR912 to 71.5K_0603_1% SD014715280 from 63.4K_0603_1% SD014634280 4.Change PH901,PH904 to SL200000L00 220K_0402_5%_TSM0B224J4702RE from SL200000500 220K_0402_5%_ERTJ0EV224J	20120514	DVT
15	For material EOL	P55	Change PH901,PH904 to SL200000L00 220K_0402_5%_TSM0B224J4702RE from SL200000500 220K_0402_5%_ERTJ0EV224J	20120514	DVT
16	For HW VGA power sequence	P54	Add PR972 SD028000080 0_0402_5% Unmount PD801 Change PR820 to 0_0402_5% SD028000080 from 150K_0402_1% SD034150380 Unmount PC810	20120516	DVT

CONFIDENTIAL

THIS SHEET OF ENGINEERING DRAWING IS THE PROPRIETARY PROPERTY OF COMPAL ELECTRONICS, INC. AND CONTAINS CONFIDENTIAL AND TRADE SECRET INFORMATION. THIS SHEET MAY NOT BE TRANSFERED FROM THE CUSTODY OF THE COMPETENT DIVISION OF R&D DEPARTMENT EXCEPT AS AUTHORIZED BY COMPAL ELECTRONICS, INC. NEITHER THIS SHEET NOR THE INFORMATION IT CONTAINS MAY BE USED BY OR DISCLOSED TO ANY THIRD PARTY WITHOUT PRIOR WRITTEN CONSENT OF COMPAL ELECTRONICS, INC.

Item	Reason for change	PG#	Modify List	Date	Phase
17	For HW reset function	P50	1.Add PR420 SD028000080 0_0402_5% for reserve 2 reserve.PR419 and PR420	20120606	PVT
18	For ACDET function	P49	1.Change PR313 to 60.4K_0603_1% SD014604280 from 64.9K_0603_1% SD014649280	20120615	PVT
19	For HW Grenn clock UMA sku trial tun	P47	1. unmount PD103 2. Change PR108 to 150_0603_5% SD013150080 from 560_0603_5% SD013560080 Change PR109 to 1K_0603_5% SD013100180 from 560_0603_5% SD013560080	20120625	PVT
20	For ACDET function	P49	1.Change PR313 to 59K_0603_1% SD014590280 from 60.4K_0603_1% SD014604280	20120705	PVT
21	For VR_HOT	P55	1.unmount PR915 and PR946	20120705	PVT
22	For HW Grenn clock	P47	1. mount PD103 2. Change PR108 to 150_0603_5% SD013150080 from 560_0603_5% SD013560080 Change PR109 to 1K_0603_5% SD013100180 from 560_0603_5% SD013560080	20120723	SVT
23	For material issue	P51	1.Change PU502 to SA00004CY10 S IC RT8061AZQW WDFN 10P PWM from SA00003RU00 S IC SY8033BDBC DFN 10P SINGLE BUCK	20120723	SVT

CONFIDENTIAL

THIS SHEET OF ENGINEERING DRAWING IS THE PROPRIETARY PROPERTY OF COMPAL ELECTRONICS, INC. AND CONTAINS CONFIDENTIAL AND TRADE SECRET INFORMATION. THIS SHEET MAY NOT BE TRANSFERED FROM THE CUSTODY OF THE COMPETENT DIVISION OF R&D DEPARTMENT EXCEPT AS AUTHORIZED BY COMPAL ELECTRONICS, INC. NEITHER THIS SHEET NOR THE INFORMATION IT CONTAINS MAY BE USED BY OR DISCLOSED TO ANY THIRD PARTY WITHOUT PRIOR WRITTEN CONSENT OF COMPAL ELECTRONICS, INC.

COMPAL CONFIDENTIAL

MODEL NAME: *Power Sequence Block Diagram*
PCB NAME: *LA-7981P*
REVISION:
DATE: *2011/07/13*

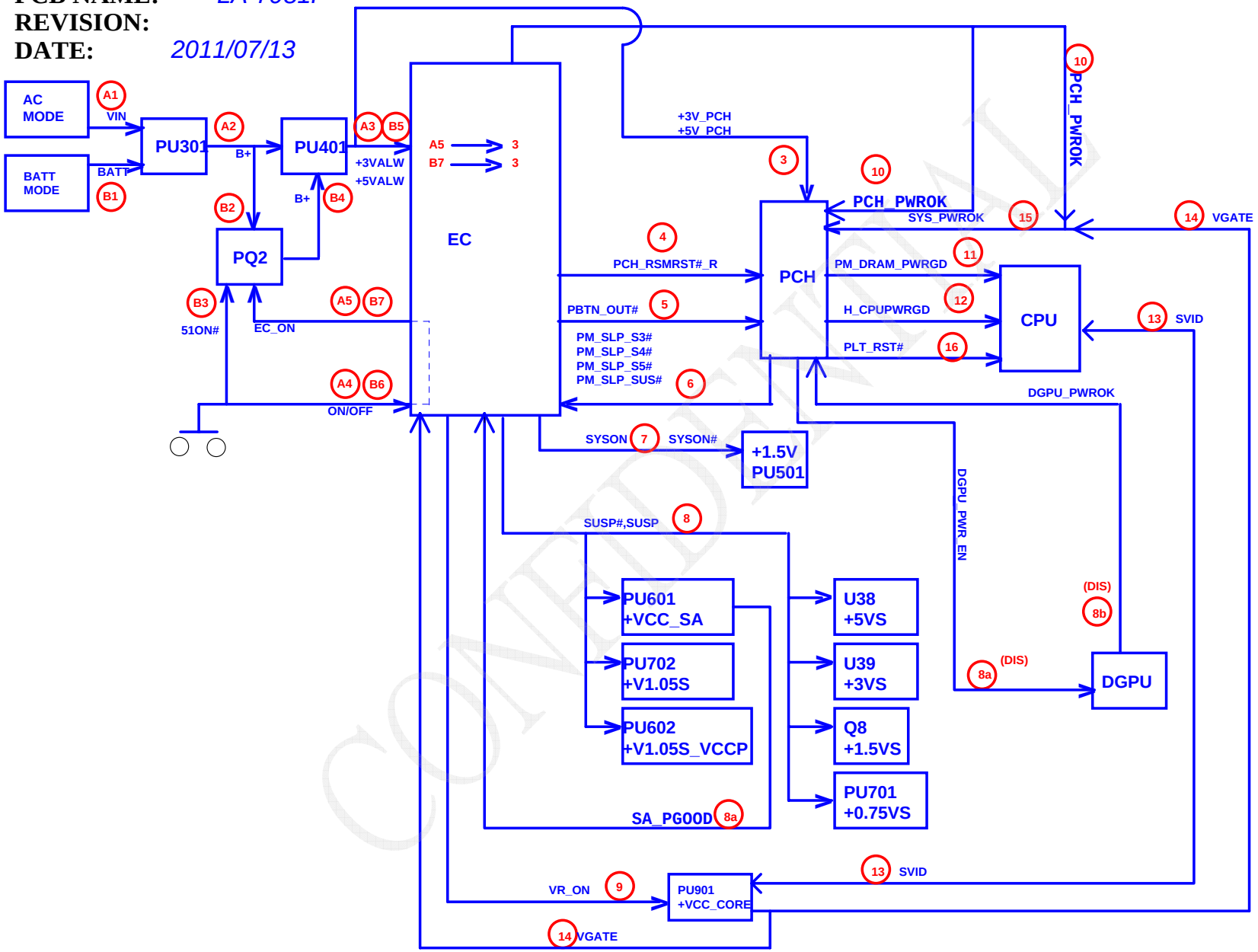

Security Classification	Compal Secret Data		
Issued Date	2011/06/15	Deciphered Date	2012/07/11

THIS SHEET OF ENGINEERING DRAWING IS THE PROPRIETARY PROPERTY OF COMPAL ELECTRONICS, INC. AND CONTAINS CONFIDENTIAL AND TRADE SECRET INFORMATION. THIS SHEET MAY NOT BE TRANSFERED FROM THE CUSTODY OF THE COMPETENT DIVISION OF R&D DEPARTMENT EXCEPT AS AUTHORIZED BY COMPAL ELECTRONICS, INC. NEITHER THIS SHEET NOR THE INFORMATION IT CONTAINS MAY BE USED BY OR DISCLOSED TO ANY THIRD PARTY WITHOUT PRIOR WRITTEN CONSENT OF COMPAL ELECTRONICS, INC.

Compal Electronics, Inc.

Title: *SCHEMATICS,MB A9061*

Size: Custom | Document Number: *4019K3* | Rev: C

Date: Monday, December 17, 2012 | Sheet 60 of 63

Item	Reason for change	PG#	Modify List	Date	Phase
1	Initial			5/7	DVT
2	For Green CLK and Crystal co-lay better layout	P14 P15 P23	Delete R176,R1381 and RV232	5/7	DVT
3	For Change Audio Woofer MOSFET from Dual to single channel	P15	Changer Part from SB00000EO10 to SB00000EN00	5/7	DVT
4	For OVERT# Glitch issue at Power on status	P23	Add QV9	5/7	DVT
5	For BT&WLAN Combo Card	P36	to modify R897 value from 0 ohm to 1K ohm add BT_DISABLE_F_R on JWLN1.51 add R5580	5/8	DVT
6	For Factory request and cost down LVDS PIN Define	P33	To Modify LVDS PIN Define	5/8	DVT
7	For USB Charger mode control request	P45 P42	To Add PWRSHARE_EN_R on U31.38 To Add EC_PWRSHARE_EN# on U31.74 add R5577 and R5578, delete CHG_ON#	5/8	DVT
8	To change Reset IC G601	P42	to change R4959 value from 200K ohm to 0 ohm add R5579 0 ohm	5/8	DVT
9	Reserved Touch Screen Power Control	P42 P43	add R5581,C1331,R5572,R5583,R5584 and Q156 add EC_TS_ON on U31.66 add +3VS_TS,+3VS_TS_R	5/8	DVT
10	To change Speaker PIN define for ME routing request	P41	SPK_L2+ R1556 net in JSPK1.1 SPK_L1- R1554 net in JSPK1.2 SPK_R1- R1555 net in JSPK1.3 SPK_R2+ R1553 net in JSPK1.4	5/8	DVT
11	for Realtek Vendor recommand	P41	R1123,C1134 close to U50.47 R5582,R1559 and C1135 Close to U73.1 EXT_MIC_R	5/8	DVT
12	for ME request	P39	To Modify H21,H7,H18 PCB Footprint as below H21 from H_3P3 to H_4P6 H7 from H_2P8 to H_3P0 H18 from H_3P3 to H_3P9N	5/8	DVT
13	for LAN Clock be better	P37	change C990 value from 5PF to 0 ohm.	5/9	DVT
14	for Audio Vendor recommand	P43	change JUSB3.11 from GND to +3VS change JUSB3.12 from +3VS to AGND	5/10	DVT
15	for Crystal finetune Capacitor	P43	C180,C181 from 18PF to 12PF	5/16	DVT
16	for DVT Board ID request	P42	R695 from 33K to 18K	5/17	DVT
17	for PVT request	P37	Change Reference from C990 to R5585	5/23	PVT
18	for Surge request	P38	C1325,C1326,C1327 change package from 0402 to 0603	5/23	PVT
19	for Reset IC function	P42, P50,P43	add R612,PR420,R4960,R4961 Delete R4959	5/24	PVT

CONFIDENTIAL

Item	Reason for change	PG#	Modify List	Date	Phase
20	for USB2.0 Port 0 TLC fine tune	P45	add R1170,R1171	5/29	PVT
21	for INTEL Combo card BT off	P36 P19	add R893,R894 1Kohm ,change R897 to 0 ohm change net name from PCH_GPIO36 to INTEL_BT_OFF# add INTEL_BT_OFF#_R JWLN1.51 chnage NET from BT_DISABLE_F_R to INTEL_BT_OFF#_R	6/5	PVT
22	for LVDS prevent short EC DISPOFF#	P33	R447 change value from no stuff to stuff 0ohm	6/12	PVT
23	for VSB and PCH Power rail control issue	P42 P46	add R5586 and R5591	6/21	PVT
24	add common choke for USB port 8, port 9	P43	add L78,L79,R5587,R5588,R5589,R5590	6/21	PVT
25	no need reserved C1330	P38	remove C1330	6/21	PVT
26	for PVT Board ID request	P42	R695 from 18K to 8.2K	6/21	PVT
27	for Surge modify	P38	DL6 change Part from SCV00001C00 to SCV00001D00	6/21	PVT
28	for Crystal finetune Capacitor	P14 P37	C180,C181 change value from 12P to 18P C1204,C1205 change value from 27P to 12P	6/25	PVT
29	for SMT Request	P23	LV7 change value from KC_FBMA-10-100505-300T_2P to 0ohm_0402	07/11	SVT
30	for Vendor recommand	P23	add RG10 0ohm	07/19	SVT
31	for Touch Screen request	P43	add R5592,R721 0 ohm,	07/25	SVT
32	for Green CLK request	P44	add QG1,RG13,CG10	8/1	SVT
33	for LED Brightness	P44	modify R623,R765 value from 300 ohm to 560 ohm	8/1	SVT
34	for reduce component count	P10 P	Modify footprint to jumper R69 to J14 R277 to J16	8/1	SVT
35	for SVT Board ID request	P42	R695 from 8.2K to 0 ohm	8/1	SVT

CONFIDENTIAL

Item	Reason for change	PG#	Modify List	Date	Phase
36	for EMI Request	P45	not stuff R1154,R1155,R1156,R1157 Stuff L68,L70	8/1	SVT
37	for Remove ODD Zero Power Function	P40	Q99,Q100 R552,R675,C607 not stuff on MB		

CONFIDENTIAL

THIS SHEET OF ENGINEERING DRAWING IS THE PROPRIETARY PROPERTY OF COMPAL ELECTRONICS, INC. AND CONTAINS CONFIDENTIAL AND TRADE SECRET INFORMATION. THIS SHEET MAY NOT BE TRANSFERRED FROM THE CUSTODY OF THE COMPETENT DIVISION OF R&D DEPARTMENT EXCEPT AS AUTHORIZED BY COMPAL ELECTRONICS, INC. NEITHER THIS SHEET NOR THE INFORMATION IT CONTAINS MAY BE USED BY OR DISCLOSED TO ANY THIRD PARTY WITHOUT PRIOR WRITTEN CONSENT OF COMPAL ELECTRONICS, INC.