WWW.FAQP.RU

Compal Confidential

EG50_BZ

Q5WT6 Schematics Document

AMD Brazos

Brazos with Ontario / Hudson M3L

UMA only

2011-12-16

LA-8531P REV: 0.3

ZZZ2

PCB

Part Number = DA60000RP00

Security Classification	Compal Secret Data		
Issued Date	2010/08/04	Deciphered Date	2010/08/04

THIS SHEET OF ENGINEERING DRAWING IS THE PROPRIETARY PROPERTY OF COMPAL ELECTRONICS, INC. AND CONTAINS CONFIDENTIAL AND TRADE SECRET INFORMATION. THIS SHEET MAY NOT BE TRANSFERED FROM THE CUSTODY OF THE COMPETENT DIVISION OF R&D DEPARTMENT EXCEPT AS AUTHORIZED BY COMPAL ELECTRONICS, INC. NEITHER THIS SHEET NOR THE INFORMATION IT CONTAINS MAY BE USED BY OR DISCLOSED TO ANY THIRD PARTY WITHOUT PRIOR WRITTEN CONSENT OF COMPAL ELECTRONICS, INC.

Compal Electronics, Inc.

Title: Cover Page

Size: Custom | Document Number: <Doc> | Rev: 0.1

Date: Friday, December 16, 2011 | Sheet 1 of 37

WWW.FAQP.RU

Compal Confidential

Model Name : Q5WT6

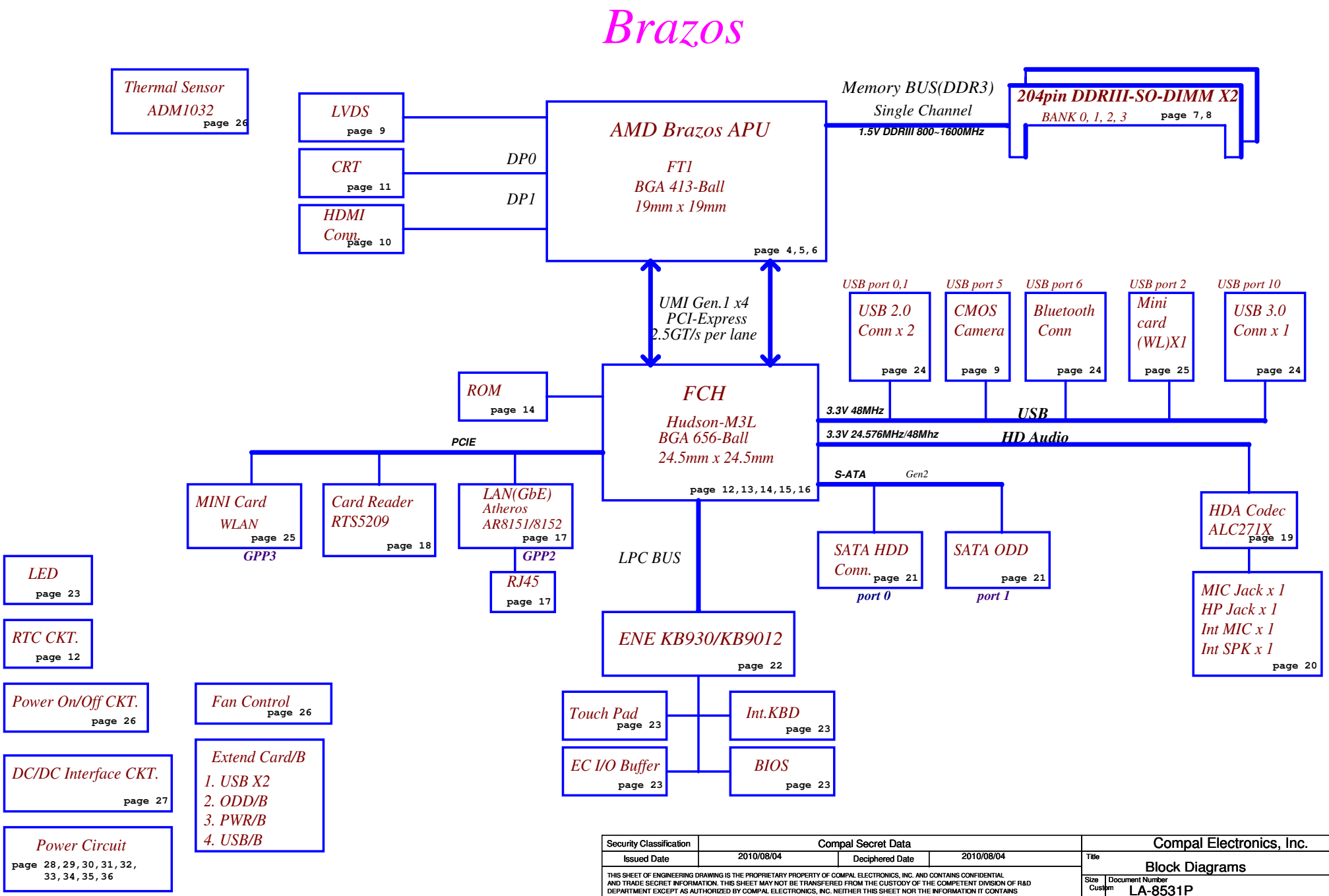

Security Classification	Compal Secret Data		
Issued Date	2010/08/04	Deciphered Date	2010/08/04

THIS SHEET OF ENGINEERING DRAWING IS THE PROPRIETARY PROPERTY OF COMPAL ELECTRONICS, INC. AND CONTAINS CONFIDENTIAL AND TRADE SECRET INFORMATION. THIS SHEET MAY NOT BE TRANSFERED FROM THE CUSTODY OF THE COMPETENT DIVISION OF R&D DEPARTMENT EXCEPT AS AUTHORIZED BY COMPAL ELECTRONICS, INC. NEITHER THIS SHEET NOR THE INFORMATION IT CONTAINS MAY BE USED BY OR DISCLOSED TO ANY THIRD PARTY WITHOUT PRIOR WRITTEN CONSENT OF COMPAL ELECTRONICS, INC.

Compal Electronics, Inc.

Title: Block Diagrams

Size: Custom | Document Number: LA-8531P | Rev: 0.1

Date: Friday, December 16, 2011 | Sheet 2 of 37

WWW.FAQP.RU

Voltage Rails

Power Plane	Description	S1	S3	S5
VIN	Adapter power supply (19V)	N/A	N/A	N/A
B+	AC or battery power rail for power circuit.	N/A	N/A	N/A
+VSB	VSB always on power rail	ON	ON	ON*
+3VALW	3.3V always on power rail	ON	ON	ON*
+5VALW	5V always on power rail	ON	ON	ON*
+1.1VALW	1.1V always on power rail	ON	ON	ON*
+APU_CORE	Core voltage for CPU (0.7-1.2V)	ON	OFF	OFF
+APU_CORE_NB	1.0V switched power rail	ON	OFF	OFF
+1.5V	1.5V power rail for CPU VDDIO and DDRIII	ON	ON	OFF
+0.75VS	0.75VS switched power rail for DDR terminator	ON	OFF	OFF
+1.05VS	1.05V switched power rail for APU VDD10	ON	OFF	OFF
+1.1VS	1.1VS switched power rail	ON	OFF	OFF
+1.8VS	1.8V switched power rail	ON	OFF	OFF
+3VS	3.3V switched power rail	ON	OFF	OFF
+5VS	5V switched power rail	ON	OFF	OFF
+VGA_CORE	Core voltage for GPU	ON	OFF	OFF
+3VSG	3.3V switched power rail for GPU	ON	OFF	OFF
+1.8VSG	1.8V switched power rail for GPU	ON	OFF	OFF
+1.5VSG	1.5V switched power rail for GPU	ON	OFF	OFF
+1.0VSG	1.0V switched power rail for GPU	ON	OFF	OFF
+3V_LAN	3.3V power rail for LAN	ON	ON	OFF
+RTCVCC	RTC power	ON	ON	ON

Note : ON* means that this power plane is ON only with AC power available, otherwise it is OFF.

STATE \ SIGNAL	SLP_S1#	SLP_S3#	SLP_S4#	SLP_S5#	+VALW	+V	+VS	Clock
Full ON	HIGH	HIGH	HIGH	HIGH	ON	ON	ON	ON
S1 (Power On Suspend)	LOW	HIGH	HIGH	HIGH	ON	ON	ON	LOW
S3 (Suspend to RAM)	LOW	LOW	HIGH	HIGH	ON	ON	OFF	OFF
S4 (Suspend to Disk)	LOW	LOW	LOW	HIGH	ON	OFF	OFF	OFF
S5 (Soft OFF)	LOW	LOW	LOW	LOW	ON	OFF	OFF	OFF

Board ID / SKU ID Table for AD channel

Vcc	3.3V +/- 5%
Ra/Rc/Re	100K +/- 5%

Board ID	Rb / Rd / Rf	V_{AD_BID} min	V_{AD_BID} typ	V_{AD_BID} max
0	0	0 V	0 V	0 V
1	8.2K +/- 5%	0.216 V	0.250 V	0.289 V
2	18K +/- 5%	0.436 V	0.503 V	0.538 V
3	33K +/- 5%	0.712 V	0.819 V	0.875 V
4	56K +/- 5%	1.036 V	1.185 V	1.264 V
5	100K +/- 5%	1.453 V	1.650 V	1.759 V
6	200K +/- 5%	1.935 V	2.200 V	2.341 V
7	NC	2.500 V	3.300 V	3.300 V

EC SM Bus1 address

Device	Address	HEX
Smart Battery	0001-011xb	NA

EC SM Bus2 address

Device	Address	HEX
EMC1403-2(GPU)	1001-101xb	9EH

SM Bus Controller 0

(FCH_SMB1 ~ FCH_SMB4, SMB_ALERT#)

Device	Address	HEX
APU SIC/SID (FCH_SMB3)		
H_THERMTRIP# (FCH_ALERT#)		

SM Bus Controller 1

(FCH_SMB0)

Device	Address	HEX
DDR DIMM1 (FCH_SMB0)	1001-000xb	90
DDR DIMM2 (FCH_SMB0)	1001-001xb	92
WLAN (FCH_SMB0)		

BTO Option Table

BTO Item	BOM Structure
AR8152	8152@
AR8151	8151@
Bluetooth	BT@
ALC271X	271X@
ALC281X	281X@
LVDS	LVDS@
EDP	EDP@
ODD zero power	ZERO@
APU_1.4G	1.4G@
APU_1.7G	1.7G@
normal ODD	ODD@

Project ID Table

Board ID	PCB Revision
0	R01
1	R02
2	R03
3	
4	
5	
6	
7	

Security Classification	Compal Secret Data		
Issued Date	2010/08/04	Deciphered Date	2010/08/04

THIS SHEET OF ENGINEERING DRAWING IS THE PROPRIETARY PROPERTY OF COMPAL ELECTRONICS, INC. AND CONTAINS CONFIDENTIAL AND TRADE SECRET INFORMATION. THIS SHEET MAY NOT BE TRANSFERED FROM THE CUSTODY OF THE COMPETENT DIVISION OF R&D DEPARTMENT EXCEPT AS AUTHORIZED BY COMPAL ELECTRONICS, INC. NEITHER THIS SHEET NOR THE INFORMATION IT CONTAINS MAY BE USED BY OR DISCLOSED TO ANY THIRD PARTY WITHOUT PRIOR WRITTEN CONSENT OF COMPAL ELECTRONICS, INC.

Compal Electronics, Inc.

Title: Notes List

Size: Custom | Document Number: LA-8531P | Rev: 0.1

Date: Friday, January 20, 2012 | Sheet 3 of 37

WWW.FAQP.RU

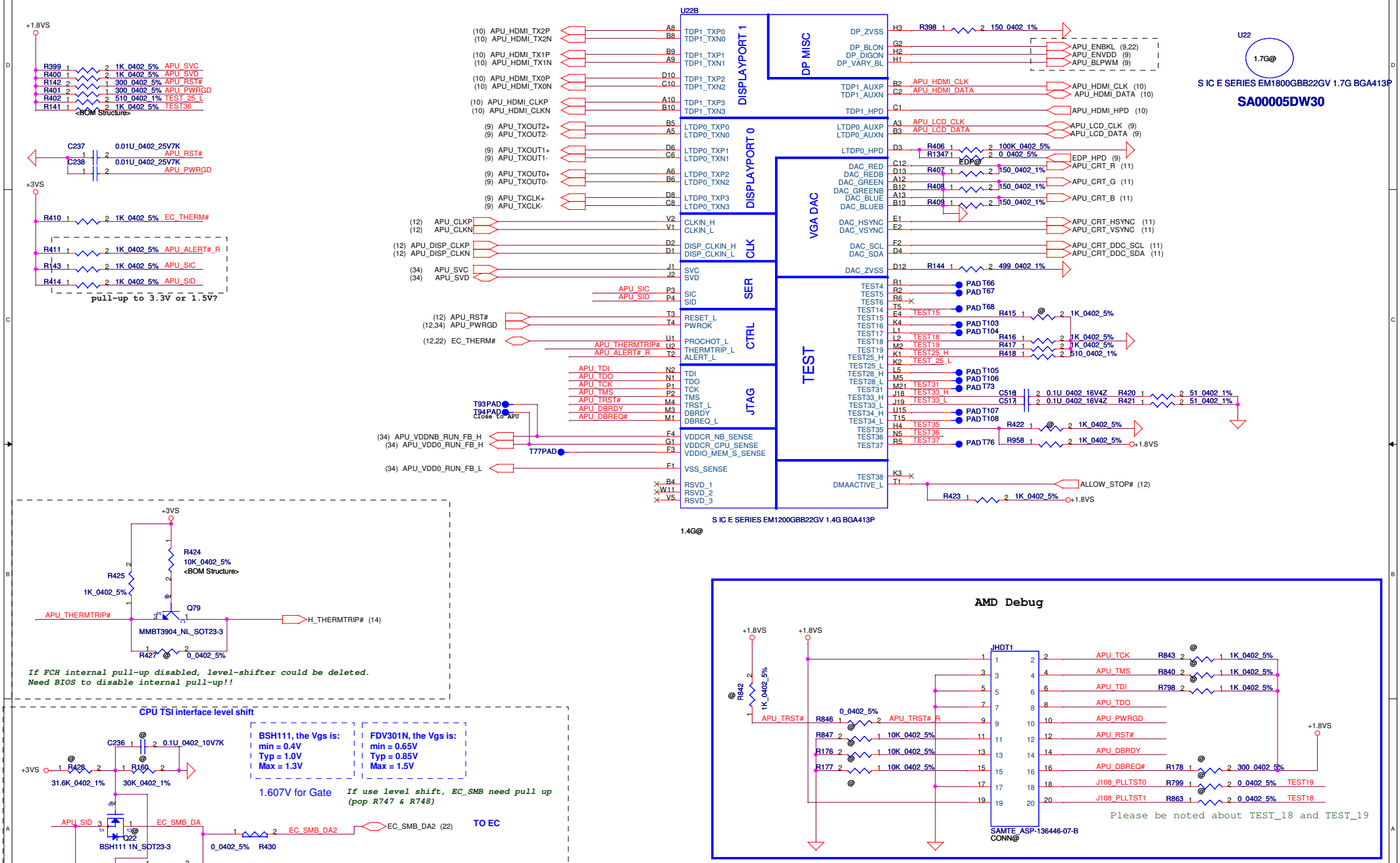

Security Classification	Compal Secret Data		
Issued Date	2010/08/04	Deciphered Date	2010/08/04

THIS SHEET OF ENGINEERING DRAWING IS THE PROPRIETARY PROPERTY OF COMPAL ELECTRONICS, INC. AND CONTAINS CONFIDENTIAL AND TRADE SECRET INFORMATION. THIS SHEET MAY NOT BE TRANSFERED FROM THE CUSTODY OF THE COMPETENT DIVISION OF R&D DEPARTMENT EXCEPT AS AUTHORIZED BY COMPAL ELECTRONICS, INC. NEITHER THIS SHEET NOR THE INFORMATION IT CONTAINS MAY BE USED BY OR DISCLOSED TO ANY THIRD PARTY WITHOUT PRIOR WRITTEN CONSENT OF COMPAL ELECTRONICS, INC.

Compal Electronics, Inc.

Title: FT1 CTRL/DP/CRT

Size: Custom | Document Number: LA-8531P | Rev: 0.1

Date: Friday, March 02, 2012 | Sheet 4 of 37

WWW.FAQP.RU

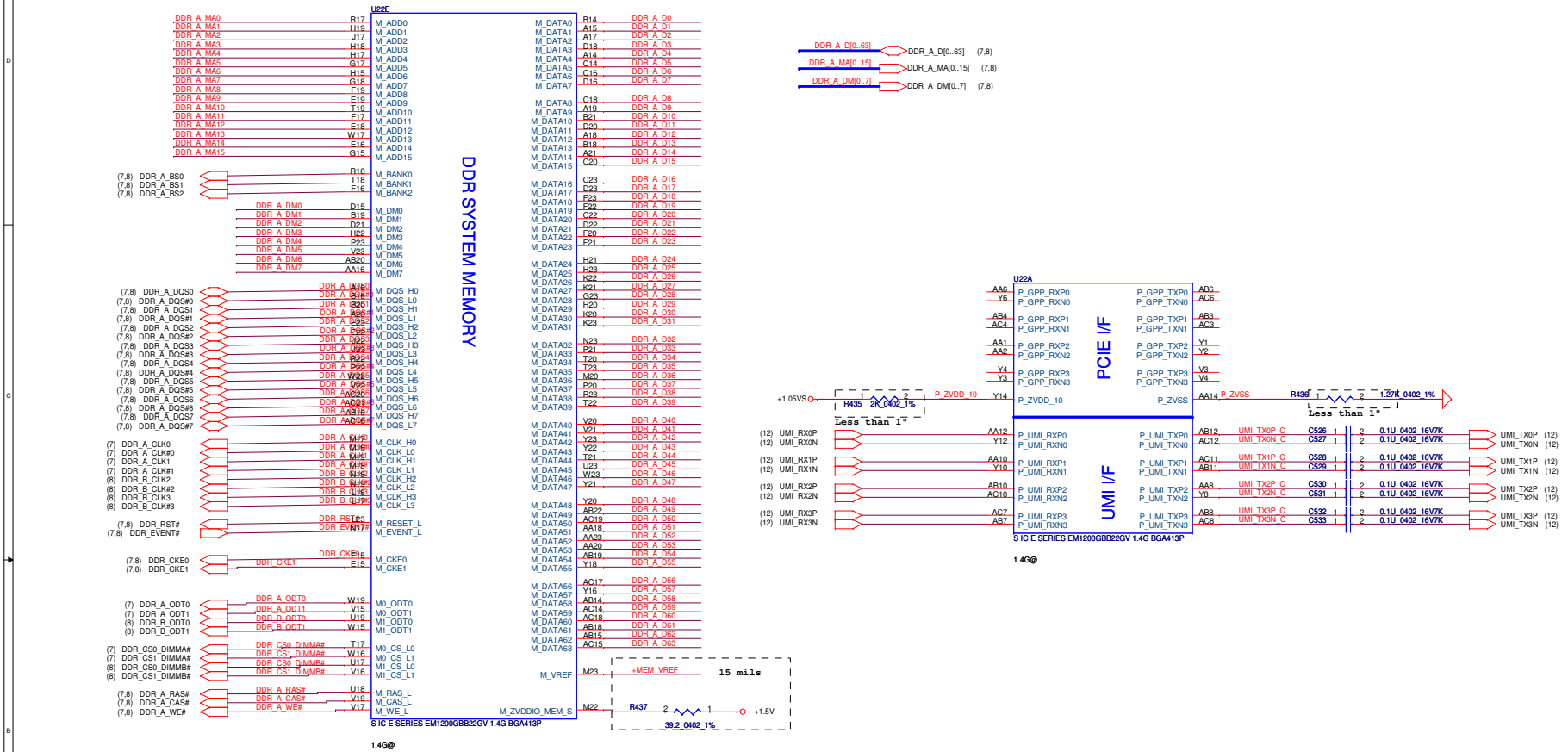

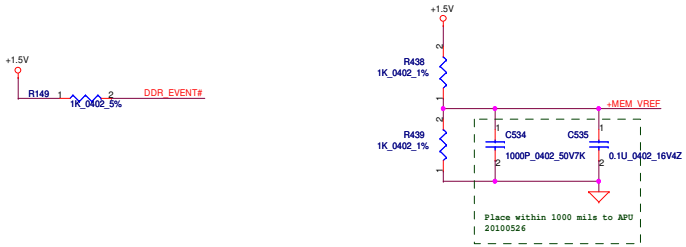

Security Classification	Compal Secret Data			Compal Electronics, Inc.
Issued Date	2010/08/04	Deciphered Date	2010/08/04	Title: FT1 DDRIII/UMI/PCIE
				Size: C; Document Number: LA-8531P; Rev: 0.1
				Date: Friday, March 02, 2012; Sheet 5 of 37

THIS SHEET OF ENGINEERING DRAWING IS THE PROPRIETARY PROPERTY OF COMPAL ELECTRONICS, INC. AND CONTAINS CONFIDENTIAL AND TRADE SECRET INFORMATION. THIS SHEET MAY NOT BE TRANSFERRED FROM THE CUSTODY OF THE COMPETENT DIVISION OF R&D DEPARTMENT EXCEPT AS AUTHORIZED BY COMPAL ELECTRONICS, INC. NEITHER THIS SHEET NOR THE INFORMATION IT CONTAINS MAY BE USED BY OR DISCLOSED TO ANY THIRD PARTY WITHOUT PRIOR WRITTEN CONSENT OF COMPAL ELECTRONICS, INC.

WWW.FAQP.RU

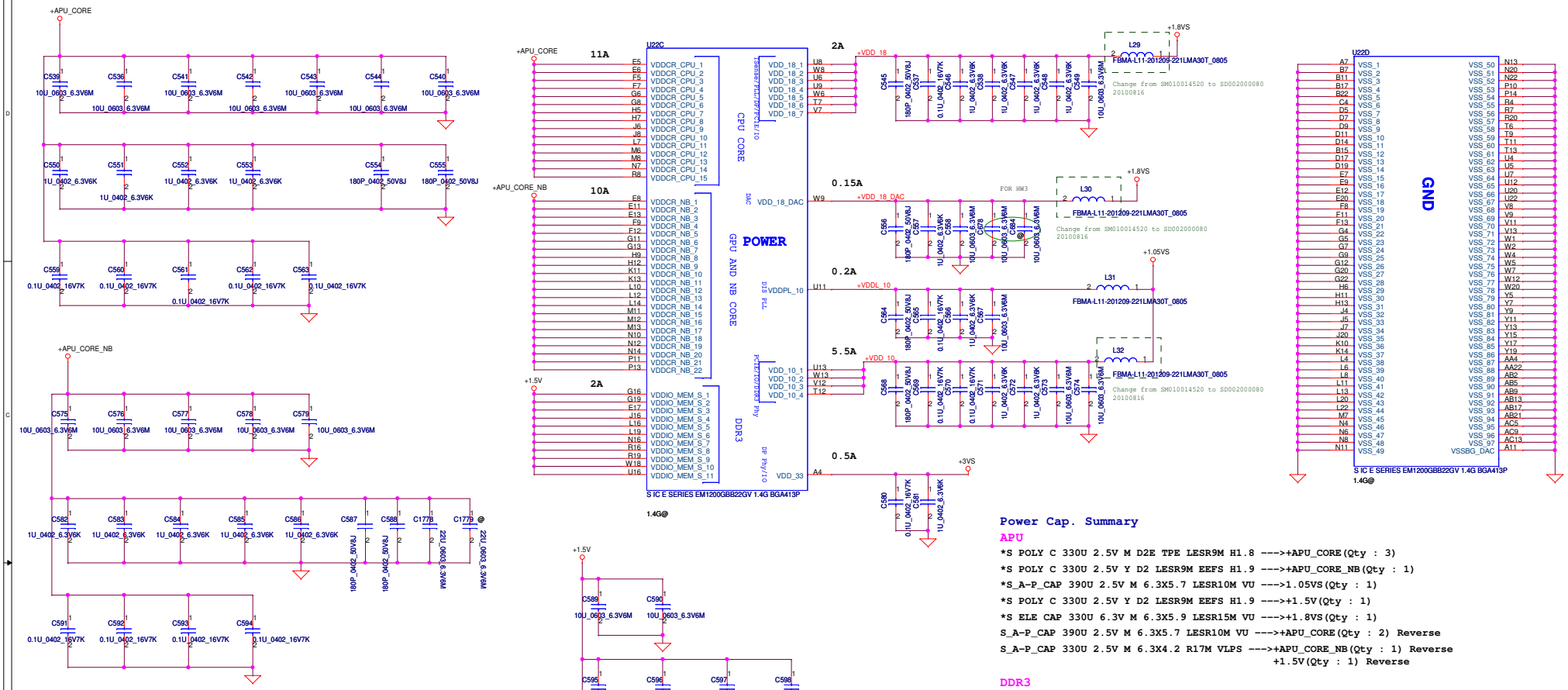

Power Cap. Summary

APU

*S POLY C 330U 2.5V M D2E TPE LESR9M H1.8 --->+APU_CORE(Qty : 3)
*S POLY C 330U 2.5V Y D2 LESR9M EEFS H1.9 --->+APU_CORE_NB(Qty : 1)
*S_A-P_CAP 390U 2.5V M 6.3X5.7 LESR10M VU --->1.05VS(Qty : 1)
*S POLY C 330U 2.5V Y D2 LESR9M EEFS H1.9 --->+1.5V(Qty : 1)
*S ELE CAP 330U 6.3V M 6.3X5.9 LESR15M VU --->+1.8VS(Qty : 1)
S_A-P_CAP 390U 2.5V M 6.3X5.7 LESR10M VU --->+APU_CORE(Qty : 2) Reverse
S_A-P_CAP 330U 2.5V M 6.3X4.2 R17M VLPS --->+APU_CORE_NB(Qty : 1) Reverse
+1.5V(Qty : 1) Reverse

DDR3

S POLY C 330U 2V M X LESR6M SX H1.9 --->1.5V(Qty : 1) Reserve

FCH

*S POLY C 330U 2.5V Y D2 LESR9M EEFS H1.9 --->1.1VS(Qty : 1)

GPU

*S POLY C 330U 2V M X LESR6M SX H1.9 --->VGA_CORE(Qty : 1) Change as OS_CON Cap. next phase
*S_A-P_CAP 390U 2.5V M 6.3X5.7 LESR10M VU --->+VGA_CORE(Qty : 1)
S POLY C 330U 2V M X LESR6M SX H1.9 --->VGA_CORE(Qty : 1) Reserve
*S_A-P_CAP 390U 2.5V M 6.3X5.7 LESR10M VU --->+1.5VSG(Qty : 1)

USB

*S_A-P_CAP 220U 6.3V M C45 R17M SVPE H4.4 --->+USB_VCCA(Qty : 1)

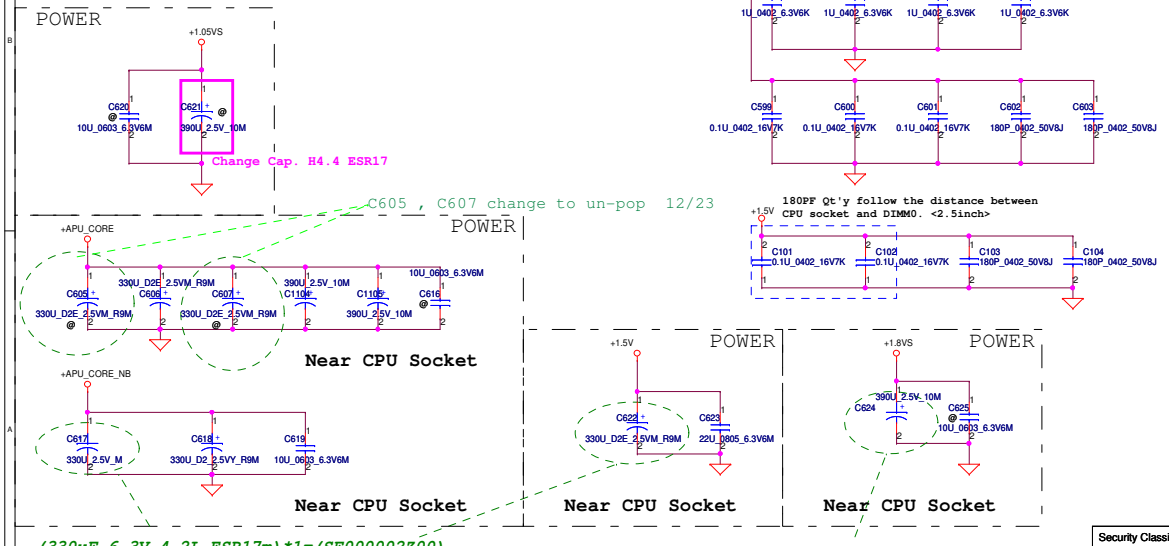

By case (Along split)

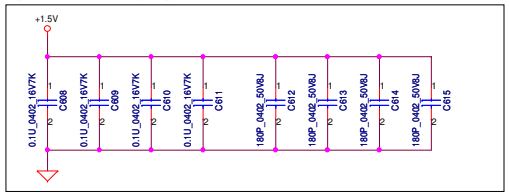

(330uF_6.3V_4.2L_ESR17m)*1=(SF000002200)

(S ELE CAP 390U 6.3V M 6.3X5.9 LESR15M VU)*1=(SF000002o00)
20101227

Security Classification	Compal Secret Data		
Issued Date	2010/08/04	Deciphered Date	2010/08/04

THIS SHEET OF ENGINEERING DRAWING IS THE PROPRIETARY PROPERTY OF COMPAL ELECTRONICS, INC. AND CONTAINS CONFIDENTIAL AND TRADE SECRET INFORMATION. THIS SHEET MAY NOT BE TRANSFERED FROM THE CUSTODY OF THE COMPETENT DIVISION OF R&D DEPARTMENT EXCEPT AS AUTHORIZED BY COMPAL ELECTRONICS, INC. NEITHER THIS SHEET NOR THE INFORMATION IT CONTAINS MAY BE USED BY OR DISCLOSED TO ANY THIRD PARTY WITHOUT PRIOR WRITTEN CONSENT OF COMPAL ELECTRONICS, INC.

Compal Electronics, Inc.

Title: FT1 PWR/VSS

Size: C | Document Number: LA-8531P | Rev: 0.1

Date: Tuesday, February 07, 2012 | Sheet 6 of 37

WWW.FAQP.RU

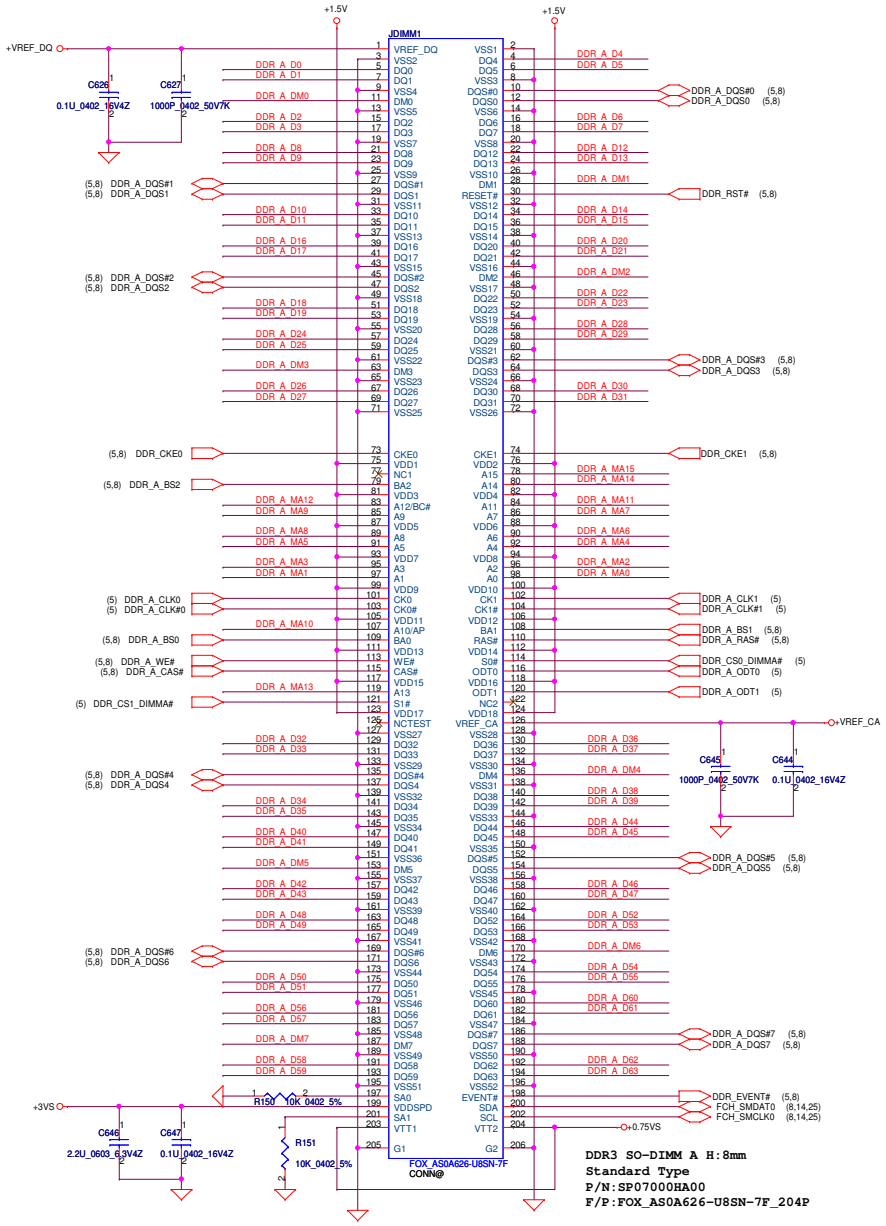

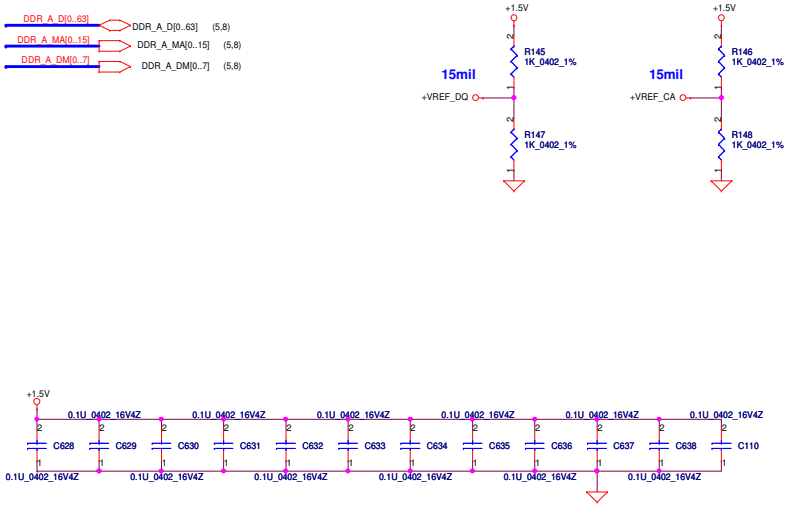

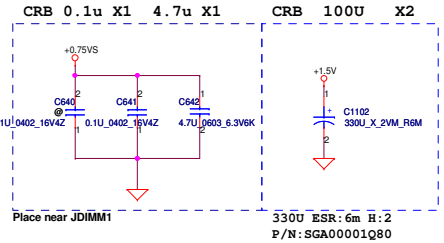

Security Classification	Compal Secret Data		
Issued Date	2010/08/04	Deciphered Date	2010/08/04

THIS SHEET OF ENGINEERING DRAWING IS THE PROPRIETARY PROPERTY OF COMPAL ELECTRONICS, INC. AND CONTAINS CONFIDENTIAL AND TRADE SECRET INFORMATION. THIS SHEET MAY NOT BE TRANSFERRED FROM THE CUSTODY OF THE COMPETENT DIVISION OF R&D DEPARTMENT EXCEPT AS AUTHORIZED BY COMPAL ELECTRONICS, INC. NEITHER THIS SHEET NOR THE INFORMATION IT CONTAINS MAY BE USED BY OR DISCLOSED TO ANY THIRD PARTY WITHOUT PRIOR WRITTEN CONSENT OF COMPAL ELECTRONICS, INC.

Compal Electronics, Inc.

Title: DDR3 SODIMM-I Socket

Size: C | Document Number: LA-8531P | Rev: 0.1

Date: Friday, March 02, 2012 | Sheet 7 of 37

WWW.FAQP.RU

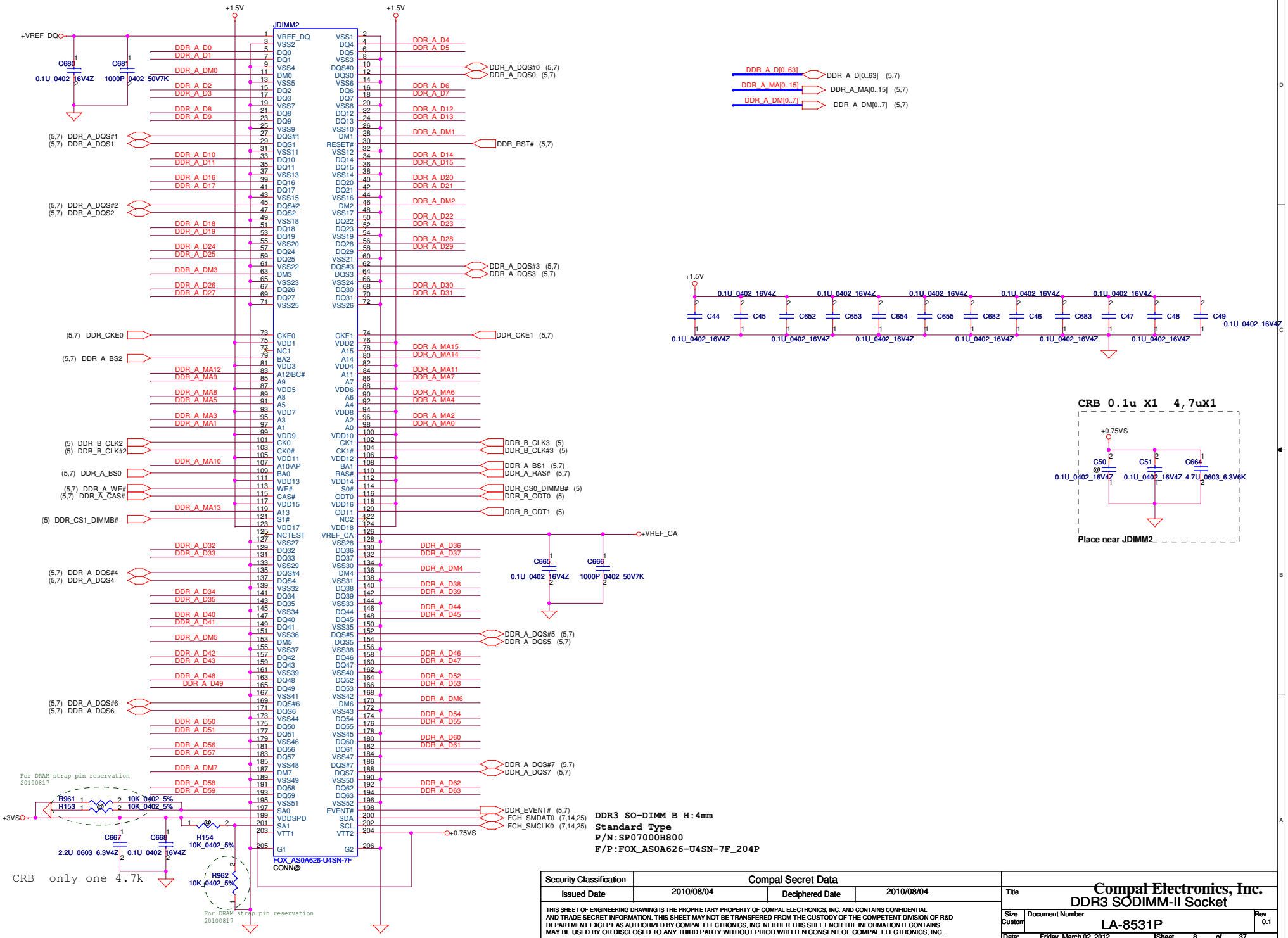

DDR3 SO-DIMM B H:4mm
Standard Type
P/N:SP07000H800
F/P:FOX_AS0A626-U4SN-7F_204P

Security Classification	Compal Secret Data		
Issued Date	2010/08/04	Deciphered Date	2010/08/04

THIS SHEET OF ENGINEERING DRAWING IS THE PROPRIETARY PROPERTY OF COMPAL ELECTRONICS, INC. AND CONTAINS CONFIDENTIAL AND TRADE SECRET INFORMATION. THIS SHEET MAY NOT BE TRANSFERED FROM THE CUSTODY OF THE COMPETENT DIVISION OF R&D DEPARTMENT EXCEPT AS AUTHORIZED BY COMPAL ELECTRONICS, INC. NEITHER THIS SHEET NOR THE INFORMATION IT CONTAINS MAY BE USED BY OR DISCLOSED TO ANY THIRD PARTY WITHOUT PRIOR WRITTEN CONSENT OF COMPAL ELECTRONICS, INC.

Compal Electronics, Inc.

Title: DDR3 SODIMM-II Socket

Size: Custom | Document Number: LA-8531P | Rev: 0.1

Date: Friday, March 02, 2012 | Sheet 8 of 37

WWW.FAQP.RU

LCD POWER CIRCUIT

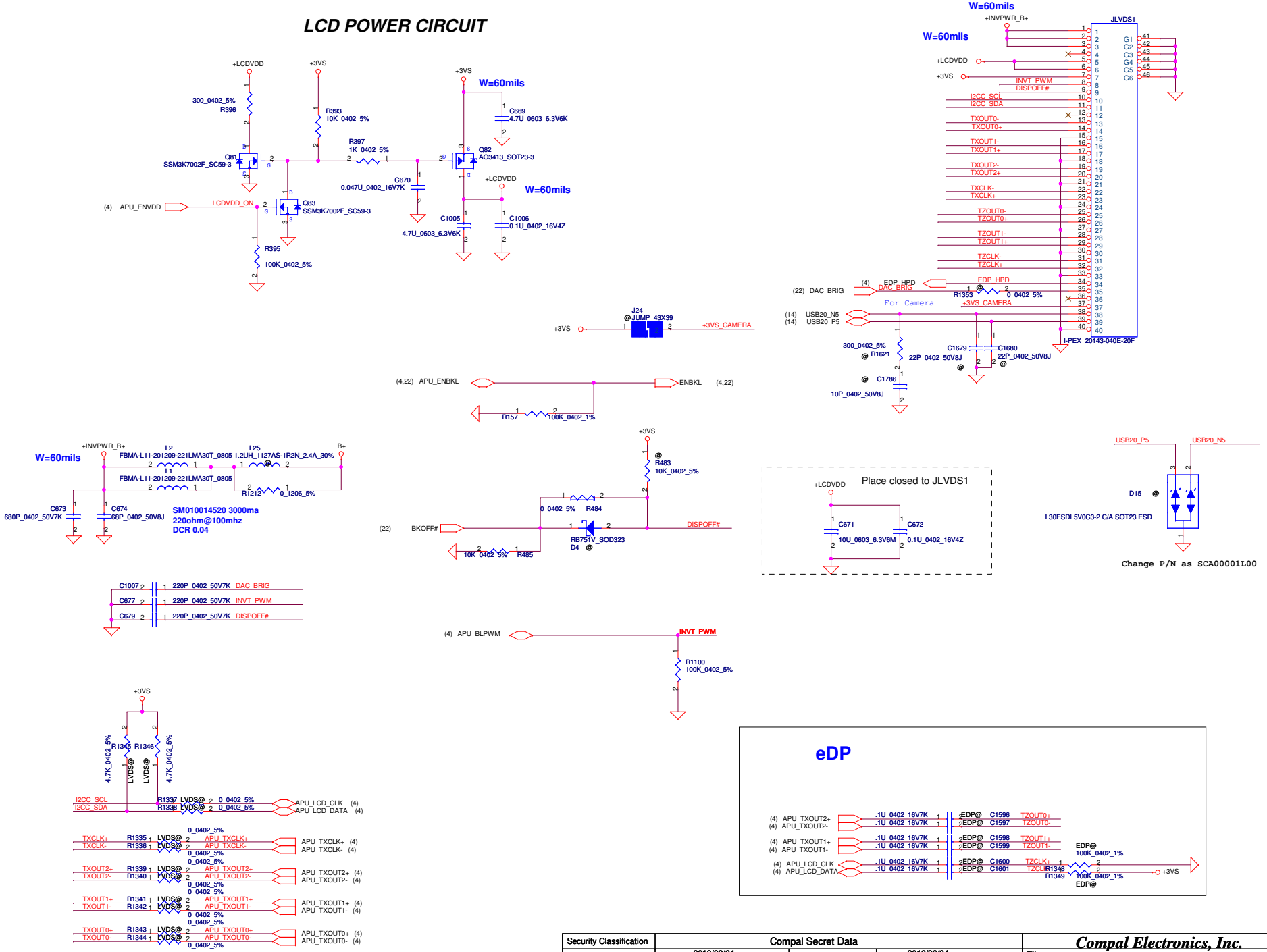

Security Classification	Compal Secret Data		
Issued Date	2010/08/04	Deciphered Date	2010/08/04

THIS SHEET OF ENGINEERING DRAWING IS THE PROPRIETARY PROPERTY OF COMPAL ELECTRONICS, INC. AND CONTAINS CONFIDENTIAL AND TRADE SECRET INFORMATION. THIS SHEET MAY NOT BE TRANSFERED FROM THE CUSTODY OF THE COMPETENT DIVISION OF R&D DEPARTMENT EXCEPT AS AUTHORIZED BY COMPAL ELECTRONICS, INC. NEITHER THIS SHEET NOR THE INFORMATION IT CONTAINS MAY BE USED BY OR DISCLOSED TO ANY THIRD PARTY WITHOUT PRIOR WRITTEN CONSENT OF COMPAL ELECTRONICS, INC.

Compal Electronics, Inc.

Title: LVDS/eDP/CAMERA

Size: Custom | Document Number: LA-8531P | Rev: 0.1

Date: Friday, March 02, 2012 | Sheet 9 of 37

WWW.FAQP.RU

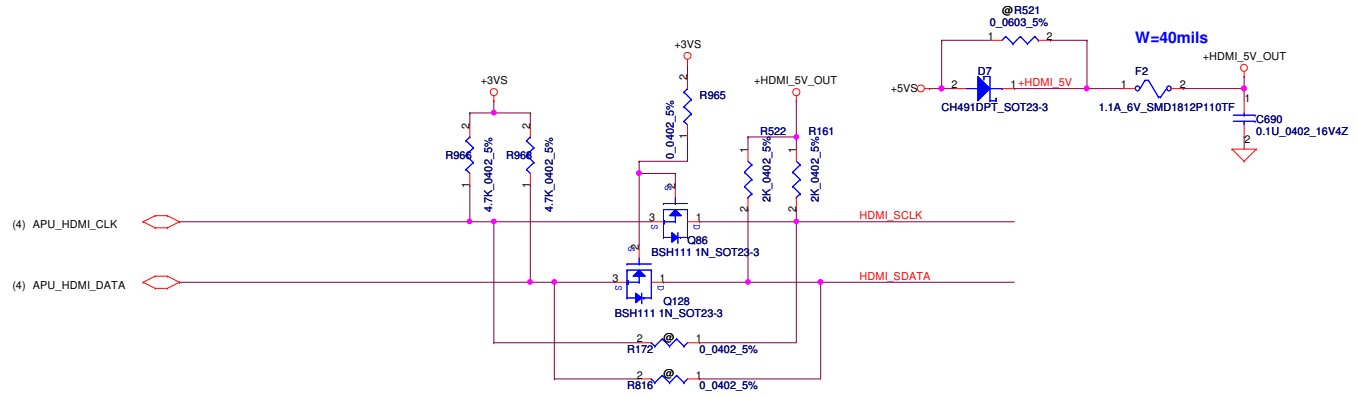

Place closed to JHDMI1

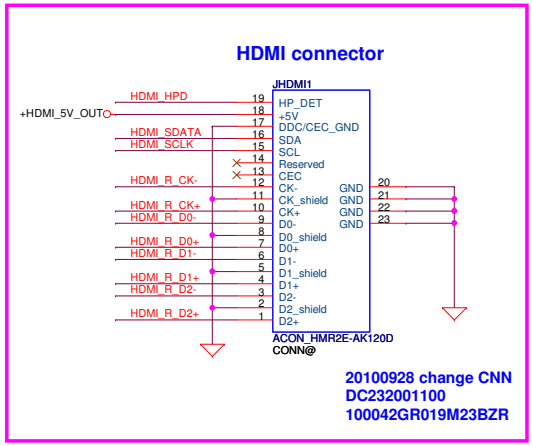

SM070001310 400ma 90ohm@100mhz DCR 0.3

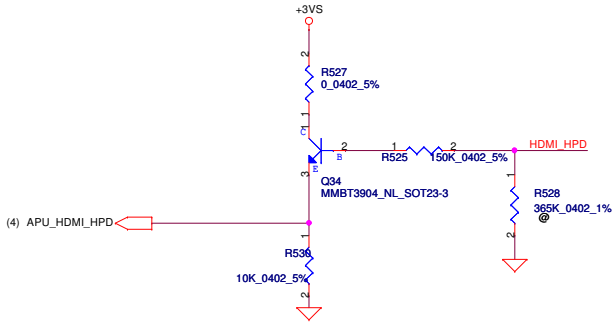

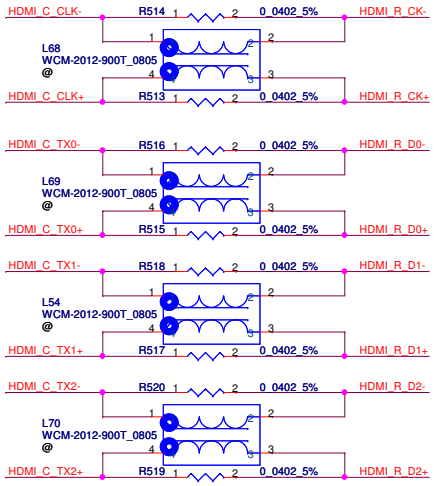

From APU

Place closed to JHDMI1

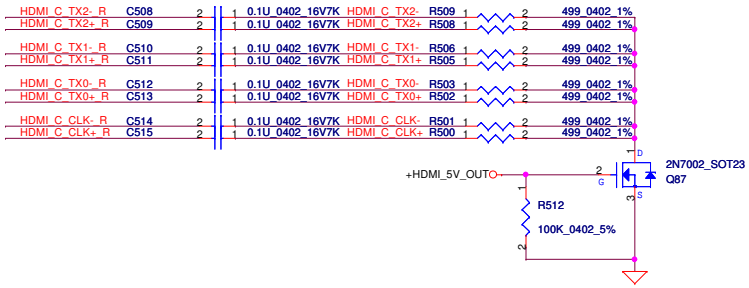

Security Classification	Compal Secret Data		
Issued Date	2010/08/04	Deciphered Date	2010/08/04

THIS SHEET OF ENGINEERING DRAWING IS THE PROPRIETARY PROPERTY OF COMPAL ELECTRONICS, INC. AND CONTAINS CONFIDENTIAL AND TRADE SECRET INFORMATION. THIS SHEET MAY NOT BE TRANSFERED FROM THE CUSTODY OF THE COMPETENT DIVISION OF R&D DEPARTMENT EXCEPT AS AUTHORIZED BY COMPAL ELECTRONICS, INC. NEITHER THIS SHEET NOR THE INFORMATION IT CONTAINS MAY BE USED BY OR DISCLOSED TO ANY THIRD PARTY WITHOUT PRIOR WRITTEN CONSENT OF COMPAL ELECTRONICS, INC.

Compal Electronics, Inc.

Title: HDMI Connector

Size: Custom | Document Number: LA-8531P | Rev: 0.1

Date: Friday, March 02, 2012 | Sheet 10 of 37

WWW.FAQP.RU

CRT Connector

Change P/N as SCA00001L00

Change to SM010005220 For EVT2, 11/29

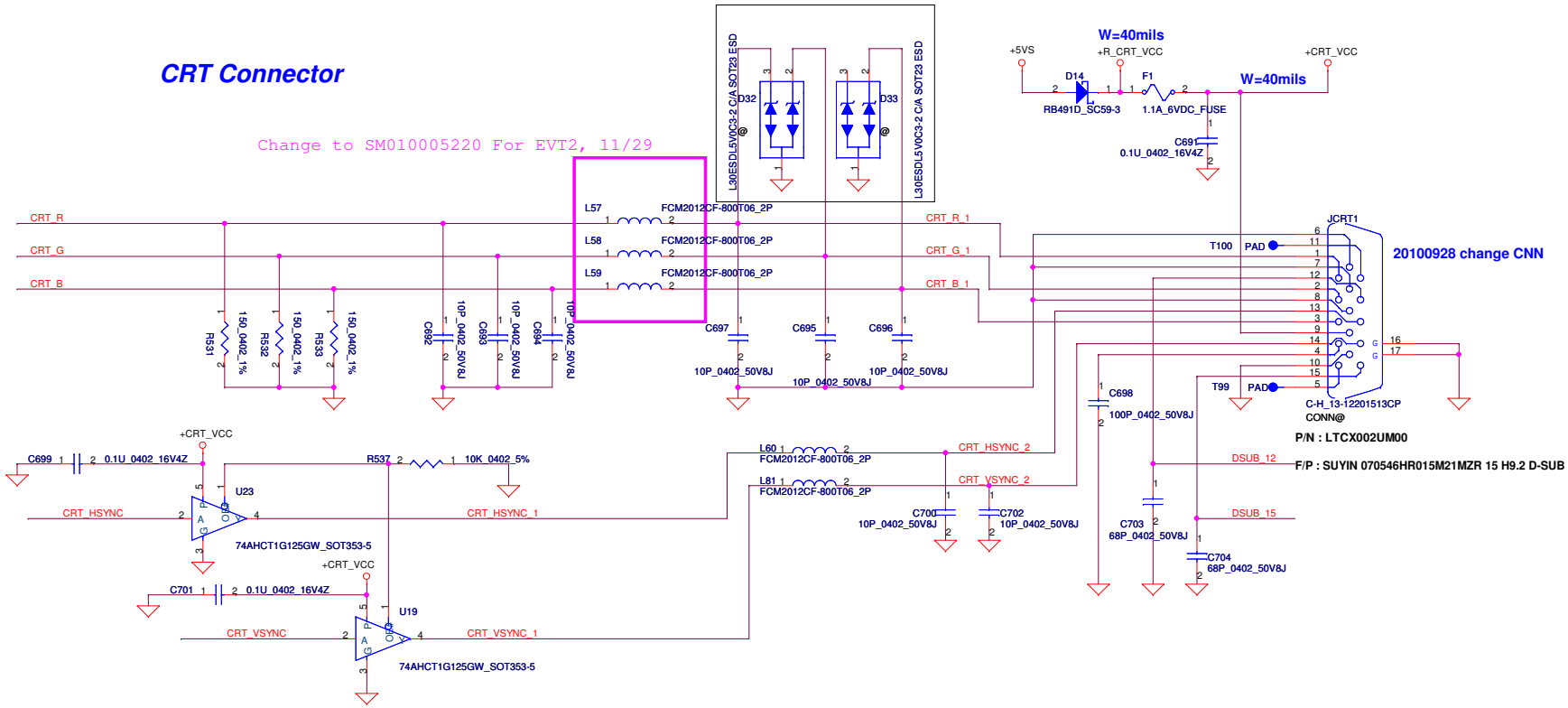

Close to Conn side

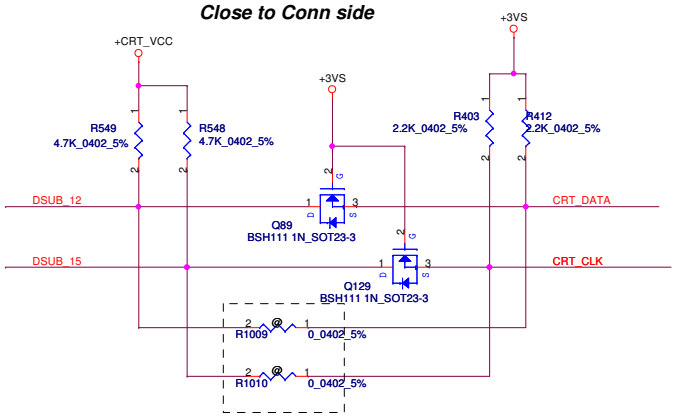

From APU

(4) APU_CRT_R	APU_CRT_R	CRT_R
(4) APU_CRT_G	APU_CRT_G	CRT_G
(4) APU_CRT_B	APU_CRT_B	CRT_B
(4) APU_CRT_HSYNC	APU_CRT_HSYNC	CRT_HSYNC
(4) APU_CRT_VSYNC	APU_CRT_VSYNC	CRT_VSYNC
(4) APU_CRT_DDC_SDA	APU_CRT_DDC_SDA	CRT_DATA
(4) APU_CRT_DDC_SCL	APU_CRT_DDC_SCL	CRT_CLK

Security Classification	Compal Secret Data		
Issued Date	2010/08/04	Deciphered Date	2010/08/04

THIS SHEET OF ENGINEERING DRAWING IS THE PROPRIETARY PROPERTY OF COMPAL ELECTRONICS, INC. AND CONTAINS CONFIDENTIAL AND TRADE SECRET INFORMATION. THIS SHEET MAY NOT BE TRANSFERED FROM THE CUSTODY OF THE COMPETENT DIVISION OF R&D DEPARTMENT EXCEPT AS AUTHORIZED BY COMPAL ELECTRONICS, INC. NEITHER THIS SHEET NOR THE INFORMATION IT CONTAINS MAY BE USED BY OR DISCLOSED TO ANY THIRD PARTY WITHOUT PRIOR WRITTEN CONSENT OF COMPAL ELECTRONICS, INC.

Compal Electronics, Inc.

Title: CRT Connector

Size: Custom | Document Number: LA-8531P | Rev: 0.1

Date: Friday, March 02, 2012 | Sheet 11 of 37

WWW.FAQP.RU

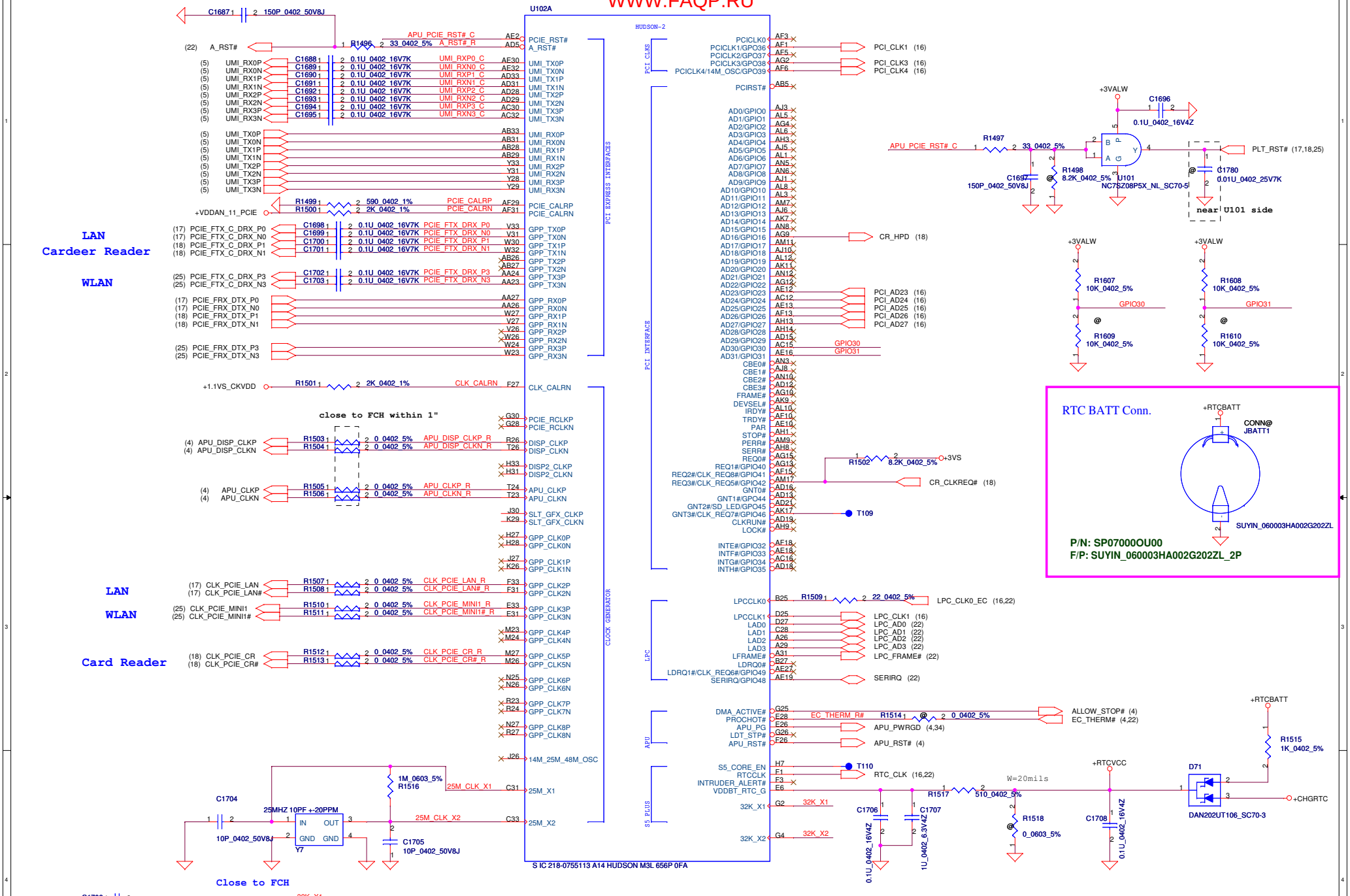

Security Classification	Compal Secret Data		
Issued Date	2011/10/12	Deciphered Date	2013/10/12

THIS SHEET OF ENGINEERING DRAWING IS THE PROPRIETARY PROPERTY OF COMPAL ELECTRONICS, INC. AND CONTAINS CONFIDENTIAL AND TRADE SECRET INFORMATION. THIS SHEET MAY NOT BE TRANSFERED FROM THE CUSTODY OF THE COMPETENT DIVISION OF R&D DEPARTMENT EXCEPT AS AUTHORIZED BY COMPAL ELECTRONICS, INC. NEITHER THIS SHEET NOR THE INFORMATION IT CONTAINS MAY BE USED BY OR DISCLOSED TO ANY THIRD PARTY WITHOUT PRIOR WRITTEN CONSENT OF COMPAL ELECTRONICS, INC.

Compal Electronics, Inc.

Title: FCH PCIE/CLK/PCI/LPC/RTC

Size: Custom | Document Number: LA8681P | Rev: 0.1

Date: Friday, March 02, 2012 | Sheet 12 of 37

WWW.FAQP.RU

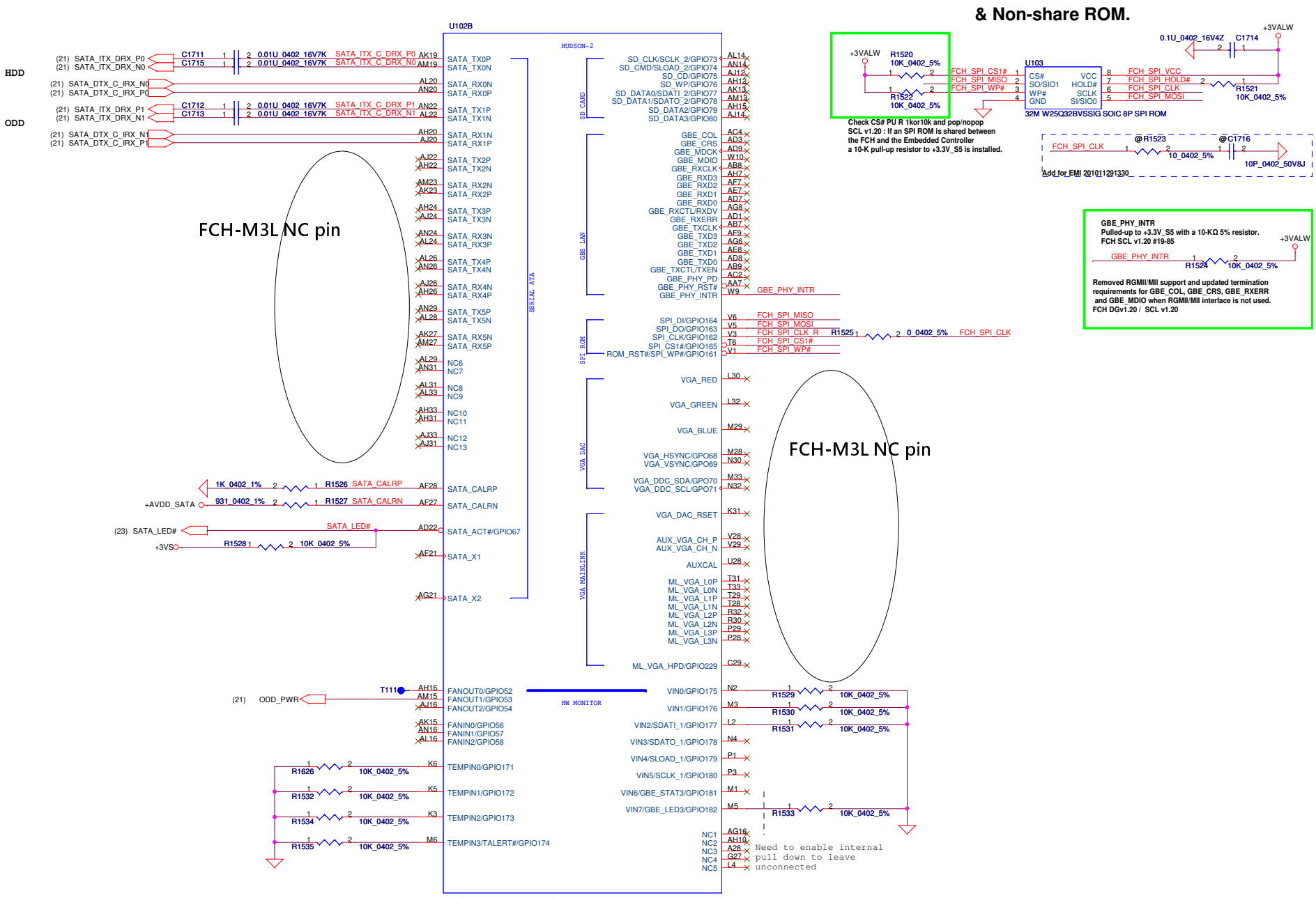

Security Classification	Compal Secret Data		
Issued Date	2011/10/12	Deciphered Date	2013/10/12

THIS SHEET OF ENGINEERING DRAWING IS THE PROPRIETARY PROPERTY OF COMPAL ELECTRONICS, INC. AND CONTAINS CONFIDENTIAL AND TRADE SECRET INFORMATION. THIS SHEET MAY NOT BE TRANSFERED FROM THE CUSTODY OF THE COMPETENT DIVISION OF R&D DEPARTMENT EXCEPT AS AUTHORIZED BY COMPAL ELECTRONICS, INC. NEITHER THIS SHEET NOR THE INFORMATION IT CONTAINS MAY BE USED BY OR DISCLOSED TO ANY THIRD PARTY WITHOUT PRIOR WRITTEN CONSENT OF COMPAL ELECTRONICS, INC.

Compal Electronics, Inc.

Title: FCH SATA/SPI/VGA/HWM/SD

Size: Custom | Document Number: LA8681P | Rev: 0.1

Date: Friday, March 02, 2012 | Sheet 13 of 37

WWW.FAQP.RU

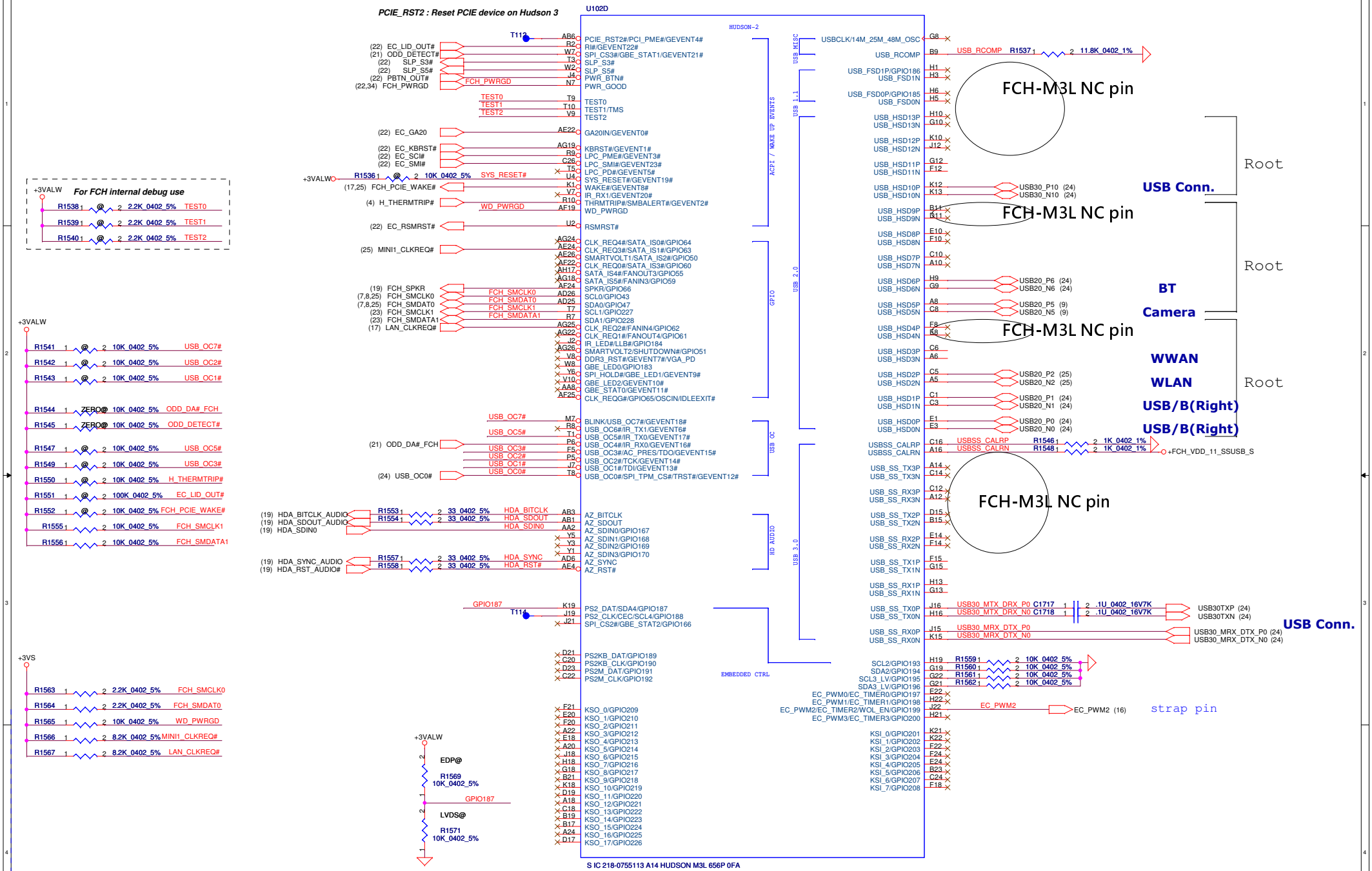

GPIO187	
0	LVDS
1	EDP

Security Classification	Compal Secret Data		
Issued Date	2011/10/12	Deciphered Date	2013/10/12

THIS SHEET OF ENGINEERING DRAWING IS THE PROPRIETARY PROPERTY OF COMPAL ELECTRONICS, INC. AND CONTAINS CONFIDENTIAL AND TRADE SECRET INFORMATION. THIS SHEET MAY NOT BE TRANSFERED FROM THE CUSTODY OF THE COMPETENT DIVISION OF R&D DEPARTMENT EXCEPT AS AUTHORIZED BY COMPAL ELECTRONICS, INC. NEITHER THIS SHEET NOR THE INFORMATION IT CONTAINS MAY BE USED BY OR DISCLOSED TO ANY THIRD PARTY WITHOUT PRIOR WRITTEN CONSENT OF COMPAL ELECTRONICS, INC.

Compal Electronics, Inc.

Title: FCH-ACPI/USB/HDA/GPIO

Size: Custom | Document Number: LA8681P | Rev: 0.1

Date: Friday, March 02, 2012 | Sheet 14 of 37

WWW.FAQP.RU

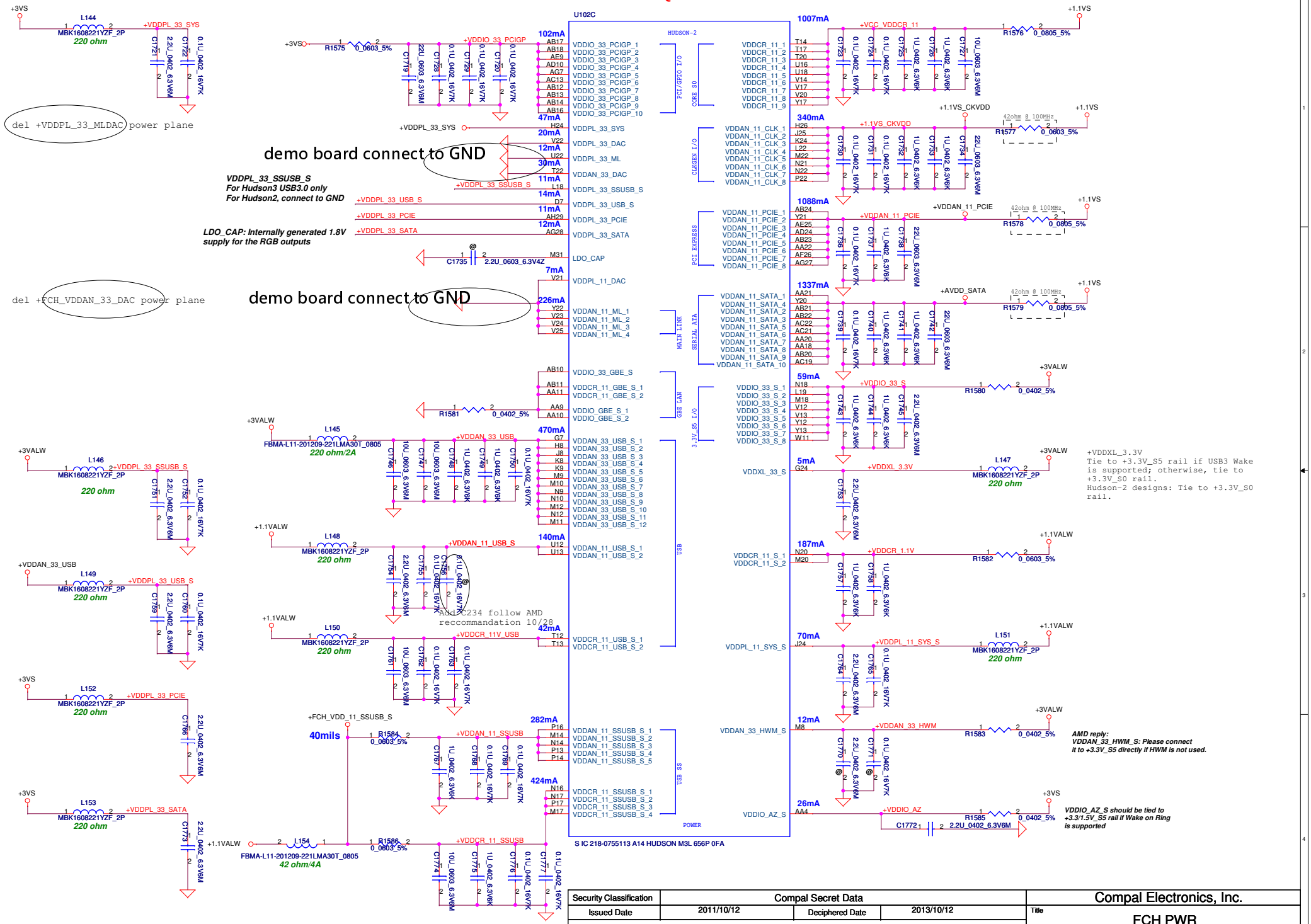

Security Classification	Compal Secret Data		
Issued Date	2011/10/12	Deciphered Date	2013/10/12

THIS SHEET OF ENGINEERING DRAWING IS THE PROPRIETARY PROPERTY OF COMPAL ELECTRONICS, INC. AND CONTAINS CONFIDENTIAL AND TRADE SECRET INFORMATION. THIS SHEET MAY NOT BE TRANSFERED FROM THE CUSTODY OF THE COMPETENT DIVISION OF R&D DEPARTMENT EXCEPT AS AUTHORIZED BY COMPAL ELECTRONICS, INC. NEITHER THIS SHEET NOR THE INFORMATION IT CONTAINS MAY BE USED BY OR DISCLOSED TO ANY THIRD PARTY WITHOUT PRIOR WRITTEN CONSENT OF COMPAL ELECTRONICS, INC.

Compal Electronics, Inc.

Title: FCH PWR

Size: Custom | Document Number: LA8681P | Rev: 0.1

Date: Tuesday, February 07, 2012 | Sheet 15 of 37

WWW.FAQP.RU

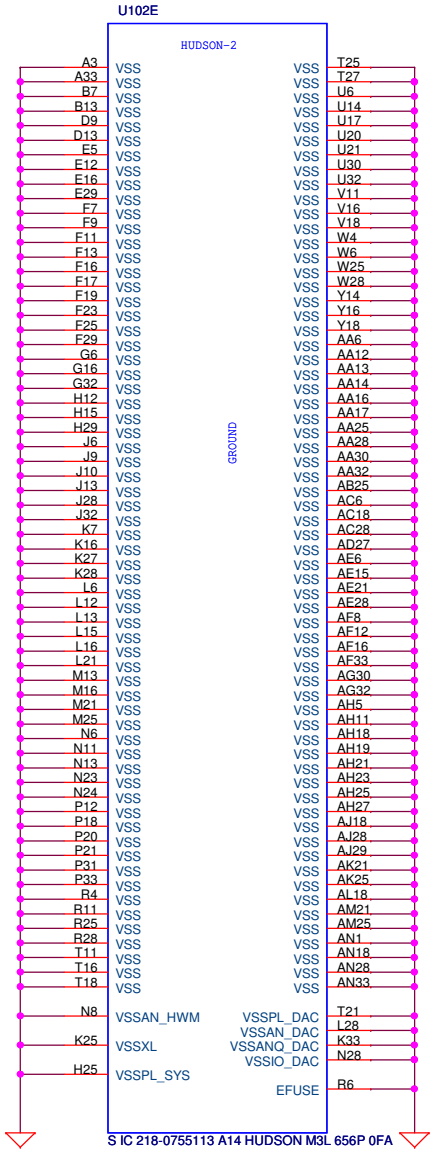

STRAP PINS

	PCI_CLK1	PCI_CLK3	PCI_CLK4	LPC_CLK0_EC	LPC_CLK1	EC_PWM2	RTC_CLK
PULL HIGH	ALLOW PCIE GEN2 DEFAULT	USE DEBUG STRAPS	NON_FUSION CLOCK MODE	EC ENABLED	CLKGEN ENABLED DEFAULT	LPC ROM	S5 PLUS MODE DISABLED DEFAULT
PULL LOW	FORCE PCIE GEN1	IGNORE DEBUG STRAP DEFAULT	FUSION CLOCK MODE DEFAULT	EC DISABLED DEFAULT	CLKGEN DISABLE	SPI ROM DEFAULT	S5 PLUS MODE ENABLED

DEBUG STRAPS

FCH HAS 15K INTERNAL PU FOR PCI_AD[27:23]

	PCI_AD27	PCI_AD26	PCI_AD25	PCI_AD24	PCI_AD23
PULL HIGH	USE PCI PLL DEFAULT	DISABLE ILA AUTORUN DEFAULT	USE FC PLL DEFAULT	USE DEFAULT PCIE STRAPS DEFAULT	DISABLE PCI MEM BOOT DEFAULT
PULL LOW	BYPASS PCI PLL	ENABLE ILA AUTORUN	BYPASS FC PLL	USE EEPROM PCIE STRAPS	ENABLE PCI MEM BOOT

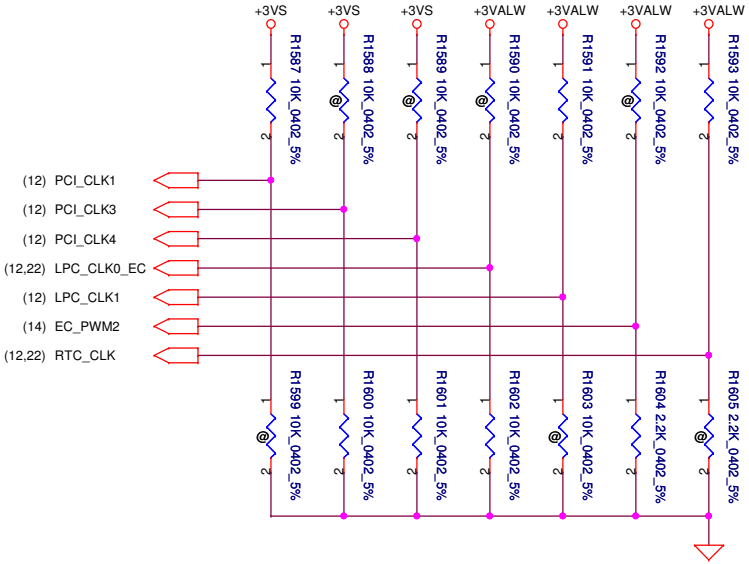

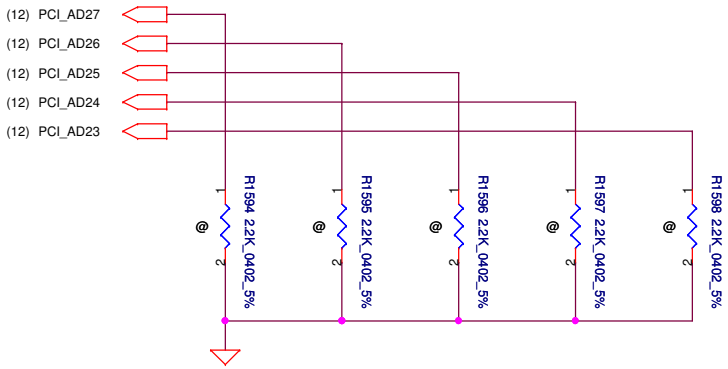

Security Classification	Compal Secret Data		
Issued Date	2011/10/12	Deciphered Date	2013/10/12

THIS SHEET OF ENGINEERING DRAWING IS THE PROPRIETARY PROPERTY OF COMPAL ELECTRONICS, INC. AND CONTAINS CONFIDENTIAL AND TRADE SECRET INFORMATION. THIS SHEET MAY NOT BE TRANSFERED FROM THE CUSTODY OF THE COMPETENT DIVISION OF R&D DEPARTMENT EXCEPT AS AUTHORIZED BY COMPAL ELECTRONICS, INC. NEITHER THIS SHEET NOR THE INFORMATION IT CONTAINS MAY BE USED BY OR DISCLOSED TO ANY THIRD PARTY WITHOUT PRIOR WRITTEN CONSENT OF COMPAL ELECTRONICS, INC.

Compal Electronics, Inc.

Title: FCH-VSS/Strap

Size: B | Document Number: LA8681P | Rev: 0.1

Date: Friday, March 02, 2012 | Sheet 16 of 37

WWW.FAQP.RU

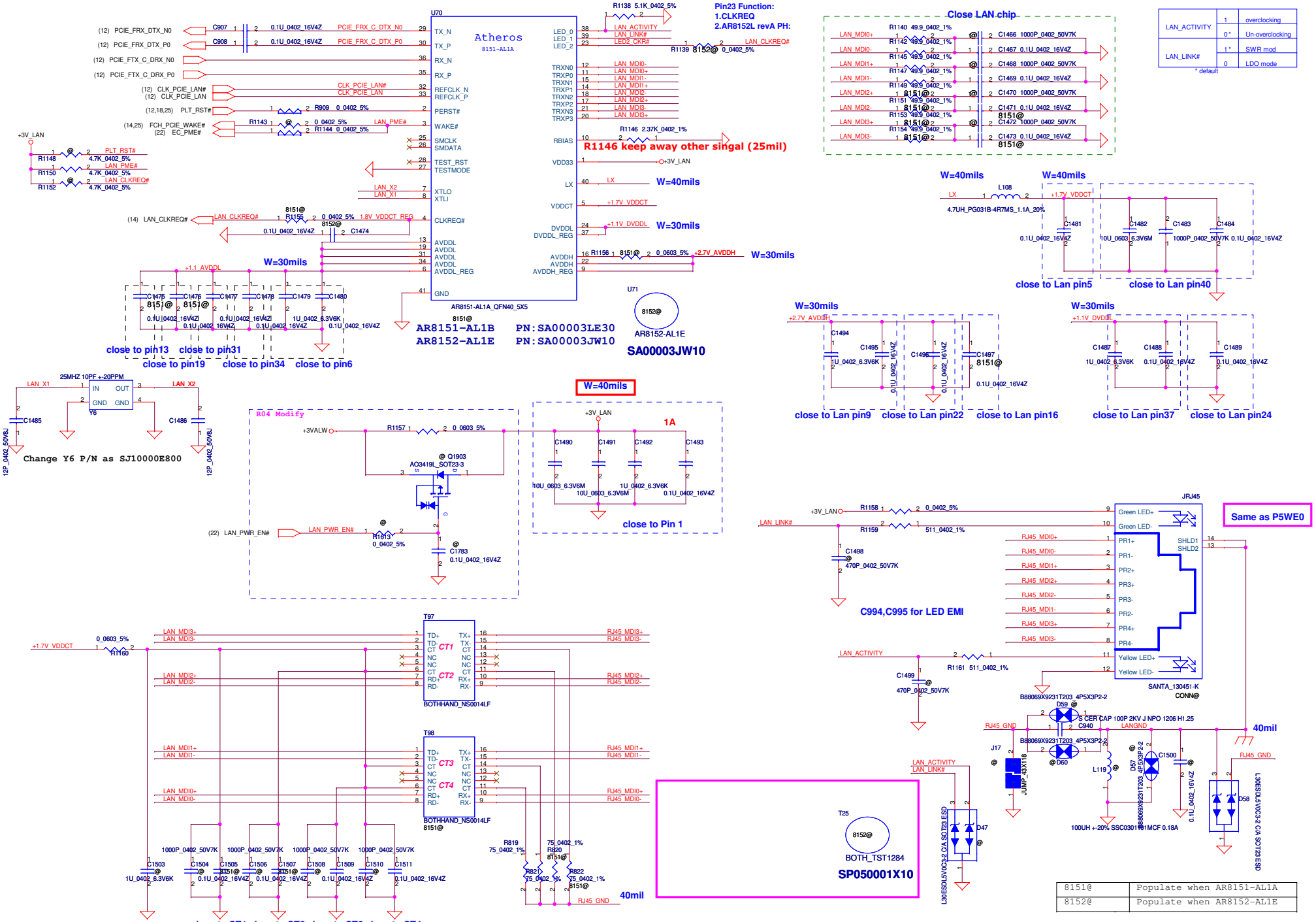

LAN_ACTIVITY	1	overclocking
	0 *	Un-overclocking
LAN_LINK#	1 *	SWR mod
	0	LDO mode

* default

8151@	Populate when AR8151-AL1A
8152@	Populate when AR8152-AL1E

Security Classification	Compal Secret Data		
Issued Date	2010/04/12	Deciphered Date	2010/10/12

THIS SHEET OF ENGINEERING DRAWING IS THE PROPRIETARY PROPERTY OF COMPAL ELECTRONICS, INC. AND CONTAINS CONFIDENTIAL AND TRADE SECRET INFORMATION. THIS SHEET MAY NOT BE TRANSFERED FROM THE CUSTODY OF THE COMPETENT DIVISION OF R&D DEPARTMENT EXCEPT AS AUTHORIZED BY COMPAL ELECTRONICS, INC. NEITHER THIS SHEET NOR THE INFORMATION IT CONTAINS MAY BE USED BY OR DISCLOSED TO ANY THIRD PARTY WITHOUT PRIOR WRITTEN CONSENT OF COMPAL ELECTRONICS, INC.

Compal Electronics, Inc.

Title: LAN AR8151 / AR8152

Size: Custom | Document Number: LA8531P | Rev: 0.1

Date: Friday, March 02, 2012 | Sheet 17 of 37

WWW.FAQP.RU

RTS5209-GR

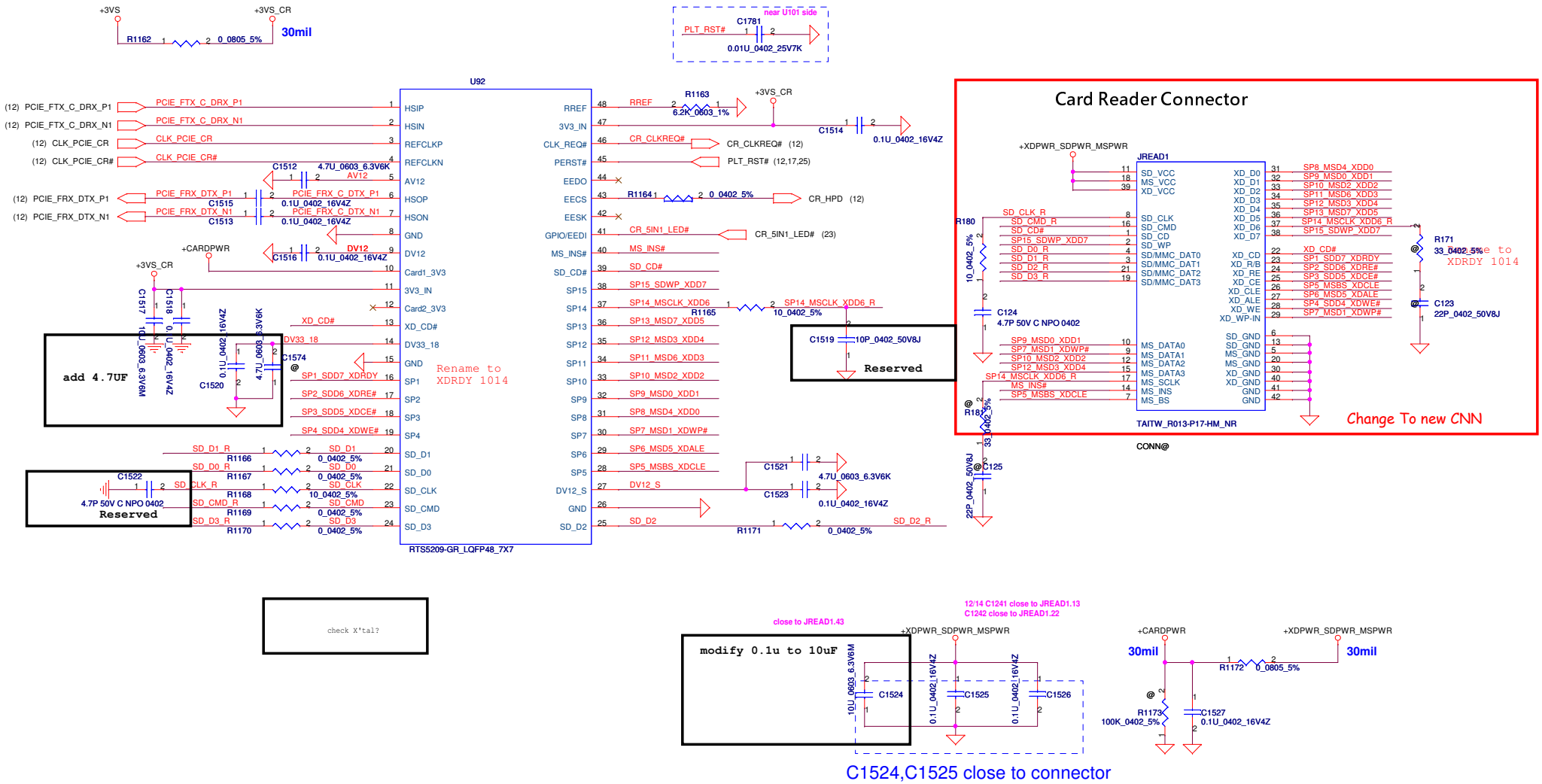

Security Classification	Compal Secret Data		
Issued Date	2010/04/12	Deciphered Date	2010/10/12

THIS SHEET OF ENGINEERING DRAWING IS THE PROPRIETARY PROPERTY OF COMPAL ELECTRONICS, INC. AND CONTAINS CONFIDENTIAL AND TRADE SECRET INFORMATION. THIS SHEET MAY NOT BE TRANSFERED FROM THE CUSTODY OF THE COMPETENT DIVISION OF R&D DEPARTMENT EXCEPT AS AUTHORIZED BY COMPAL ELECTRONICS, INC. NEITHER THIS SHEET NOR THE INFORMATION IT CONTAINS MAY BE USED BY OR DISCLOSED TO ANY THIRD PARTY WITHOUT PRIOR WRITTEN CONSENT OF COMPAL ELECTRONICS, INC.

Compal Electronics, Inc.

Title: CardReader-RTS5209-GR

Size: Custom | Document Number: LA-8531P | Rev: 0.1

Date: Friday, March 02, 2012 | Sheet 18 of 37

WWW.FAQP.RU

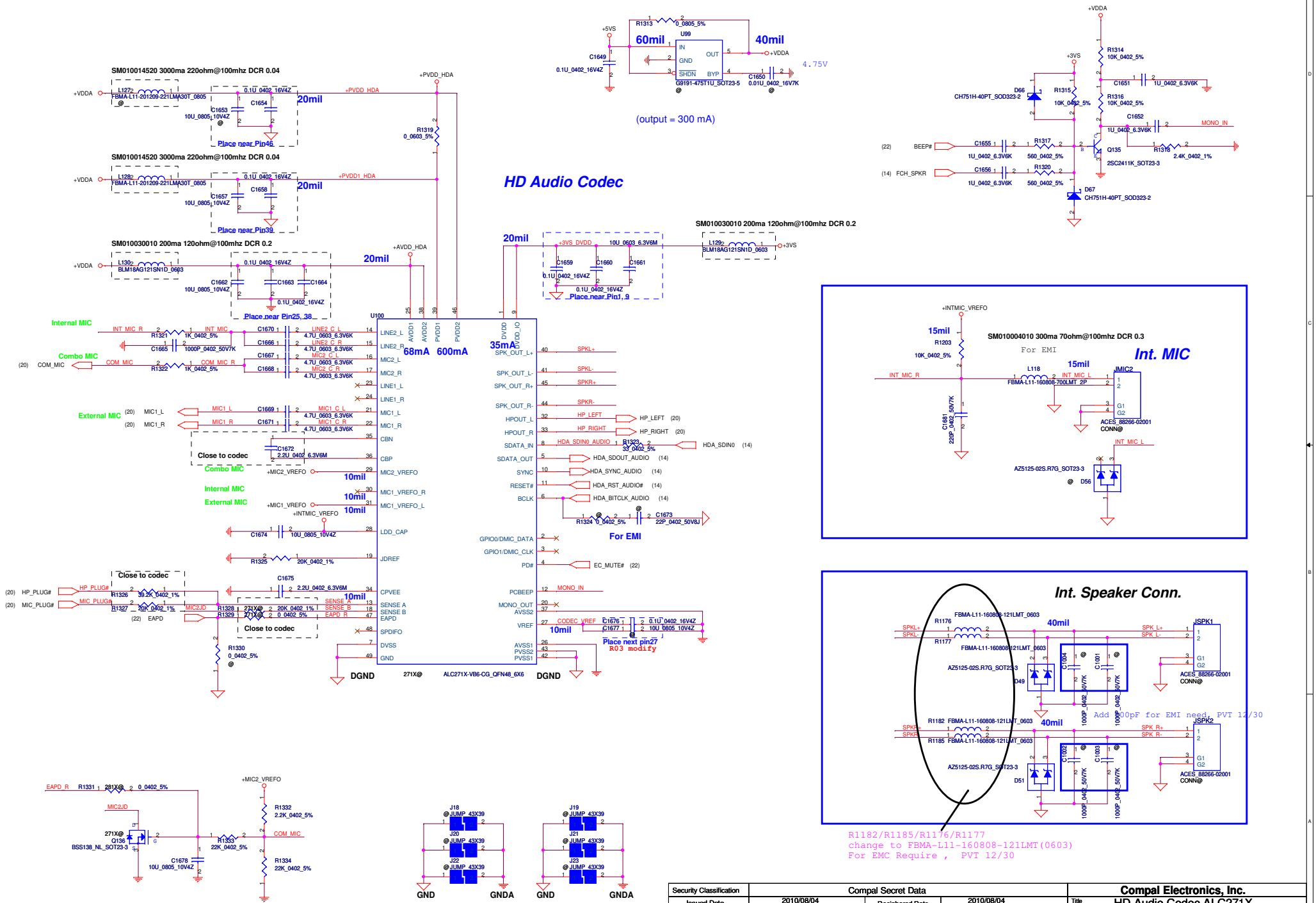

Security Classification	Compal Secret Data		
Issued Date	2010/08/04	Deciphered Date	2010/08/04

THIS SHEET OF ENGINEERING DRAWING IS THE PROPRIETARY PROPERTY OF COMPAL ELECTRONICS, INC. AND CONTAINS CONFIDENTIAL AND TRADE SECRET INFORMATION. THIS SHEET MAY NOT BE TRANSFERED FROM THE CUSTODY OF THE COMPETENT DIVISION OF R&D DEPARTMENT EXCEPT AS AUTHORIZED BY COMPAL ELECTRONICS, INC. NEITHER THIS SHEET NOR THE INFORMATION IT CONTAINS MAY BE USED BY OR DISCLOSED TO ANY THIRD PARTY WITHOUT PRIOR WRITTEN CONSENT OF COMPAL ELECTRONICS, INC.

Compal Electronics, Inc.

Title: HD Audio Codec ALC271X

Size: C | Document Number: LA-8531P | Rev: 0.1

Date: Friday, March 02, 2012 | Sheet 19 of 37

WWW.FAQP.RU

Headphone Out

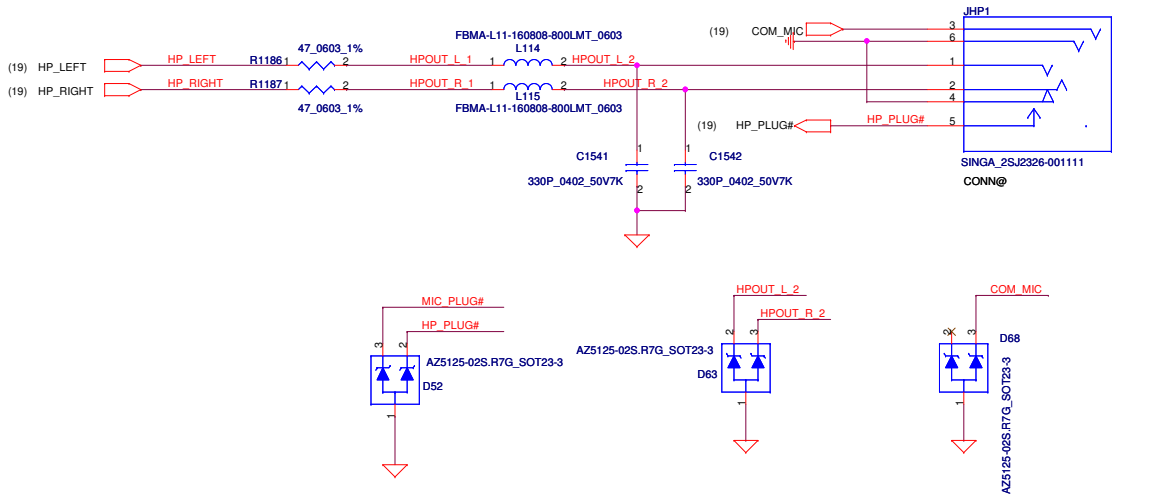

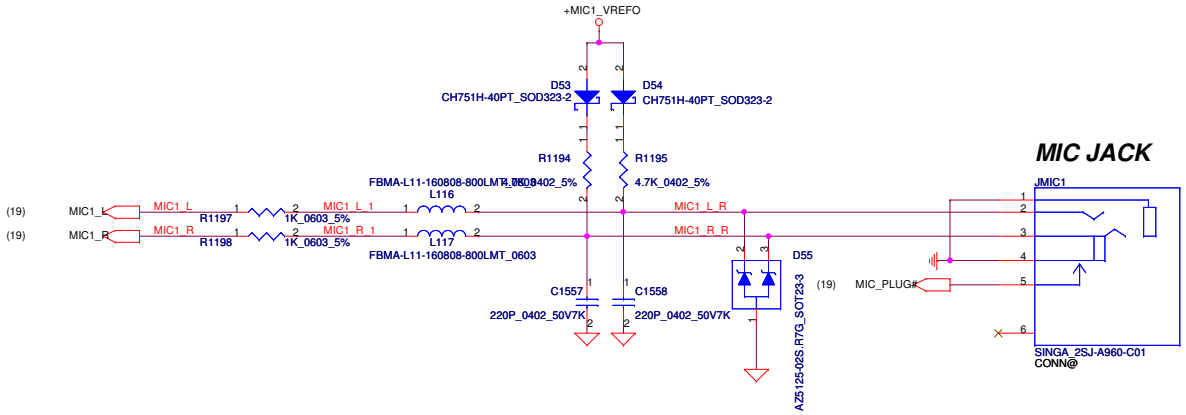

Security Classification	Compal Secret Data		
Issued Date	2010/08/27	Deciphered Date	2011/08/27

THIS SHEET OF ENGINEERING DRAWING IS THE PROPRIETARY PROPERTY OF COMPAL ELECTRONICS, INC. AND CONTAINS CONFIDENTIAL AND TRADE SECRET INFORMATION. THIS SHEET MAY NOT BE TRANSFERED FROM THE CUSTODY OF THE COMPETENT DIVISION OF R&D DEPARTMENT EXCEPT AS AUTHORIZED BY COMPAL ELECTRONICS, INC. NEITHER THIS SHEET NOR THE INFORMATION IT CONTAINS MAY BE USED BY OR DISCLOSED TO ANY THIRD PARTY WITHOUT PRIOR WRITTEN CONSENT OF COMPAL ELECTRONICS, INC.

Title: **JACK / HP / SPK**

Size: Custom | Document Number | Rev: 0.1

Date: Friday, March 02, 2012 | Sheet 20 of 37

WWW.FAQP.RU

SATA HDD Conn.

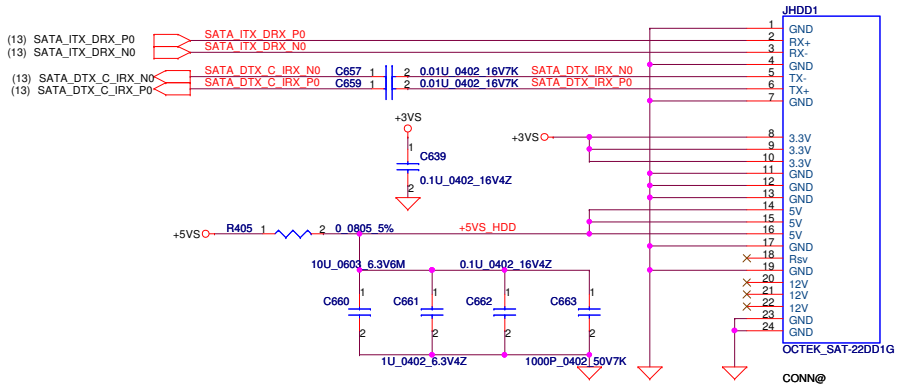

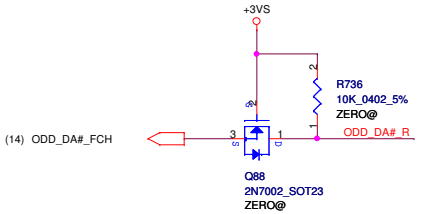

SATA ODD FFC Conn.

SATA ODD Conn.

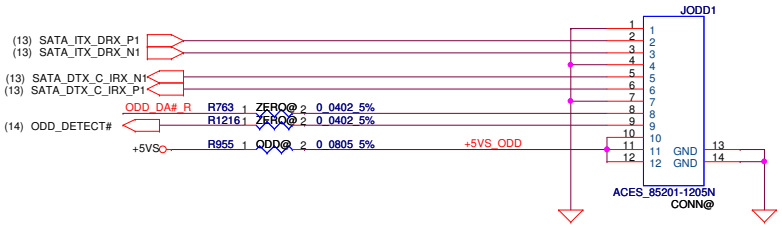

8/13
Reserve zero power ODD Function

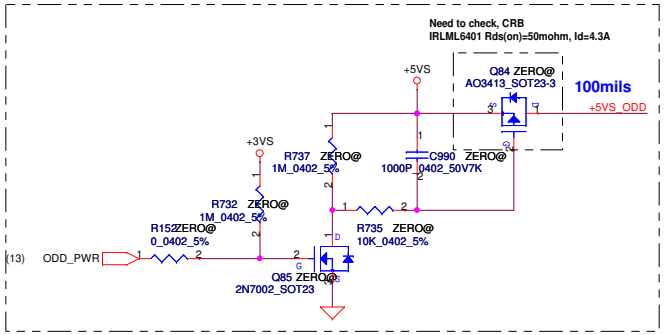

Security Classification	Compal Secret Data		
Issued Date	2010/08/04	Deciphered Date	2010/08/04

THIS SHEET OF ENGINEERING DRAWING IS THE PROPRIETARY PROPERTY OF COMPAL ELECTRONICS, INC. AND CONTAINS CONFIDENTIAL AND TRADE SECRET INFORMATION. THIS SHEET MAY NOT BE TRANSFERED FROM THE CUSTODY OF THE COMPETENT DIVISION OF R&D DEPARTMENT EXCEPT AS AUTHORIZED BY COMPAL ELECTRONICS, INC. NEITHER THIS SHEET NOR THE INFORMATION IT CONTAINS MAY BE USED BY OR DISCLOSED TO ANY THIRD PARTY WITHOUT PRIOR WRITTEN CONSENT OF COMPAL ELECTRONICS, INC.

Compal Electronics, Inc.

Title: HDD & ODD CONN

Size: Custom | Document Number: LA-8531P | Rev: 0.1

Date: Friday, March 02, 2012 | Sheet 21 of 37

WWW.FAQP.RU

For EC Tools

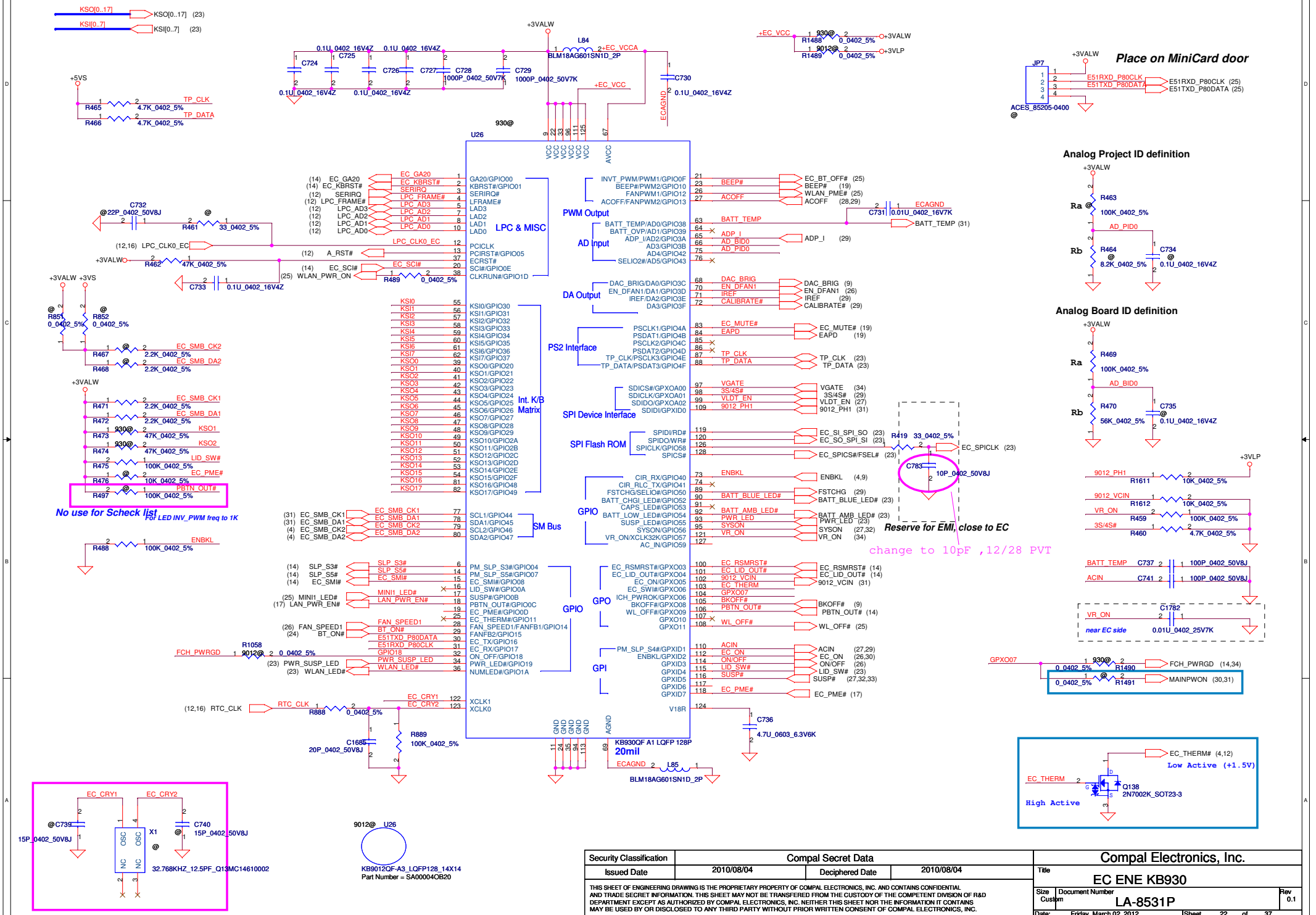

Security Classification	Compal Secret Data		
Issued Date	2010/08/04	Deciphered Date	2010/08/04

THIS SHEET OF ENGINEERING DRAWING IS THE PROPRIETARY PROPERTY OF COMPAL ELECTRONICS, INC. AND CONTAINS CONFIDENTIAL AND TRADE SECRET INFORMATION. THIS SHEET MAY NOT BE TRANSFERED FROM THE CUSTODY OF THE COMPETENT DIVISION OF R&D DEPARTMENT EXCEPT AS AUTHORIZED BY COMPAL ELECTRONICS, INC. NEITHER THIS SHEET NOR THE INFORMATION IT CONTAINS MAY BE USED BY OR DISCLOSED TO ANY THIRD PARTY WITHOUT PRIOR WRITTEN CONSENT OF COMPAL ELECTRONICS, INC.

Compal Electronics, Inc.

Title: EC ENE KB930

Size: Custom | Document Number: LA-8531P | Rev: 0.1

Date: Friday, March 02, 2012 | Sheet 22 of 37

WWW.FAQP.RU

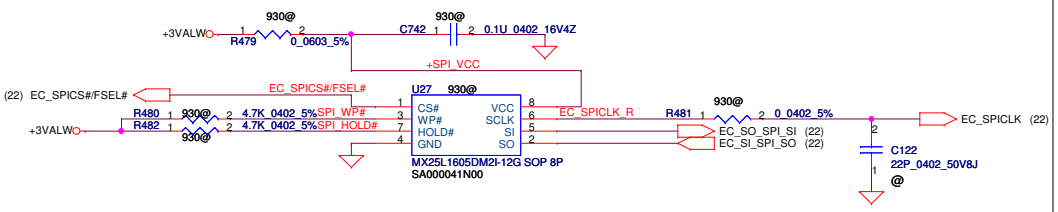

To TP/B Conn.

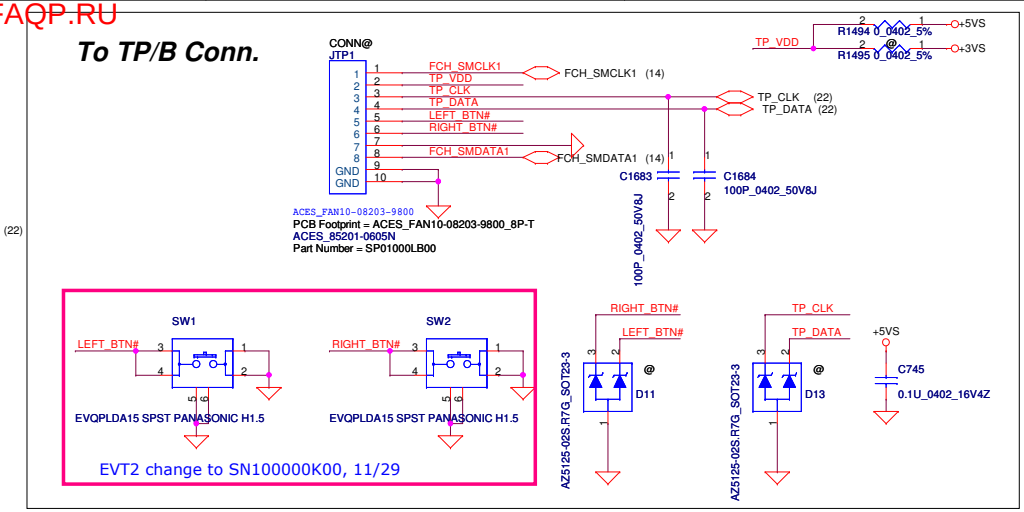

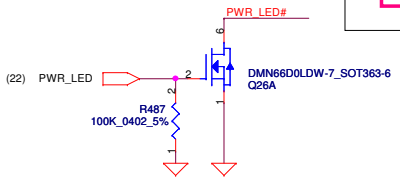

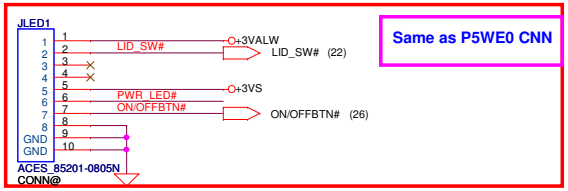

INT_KBD Conn.

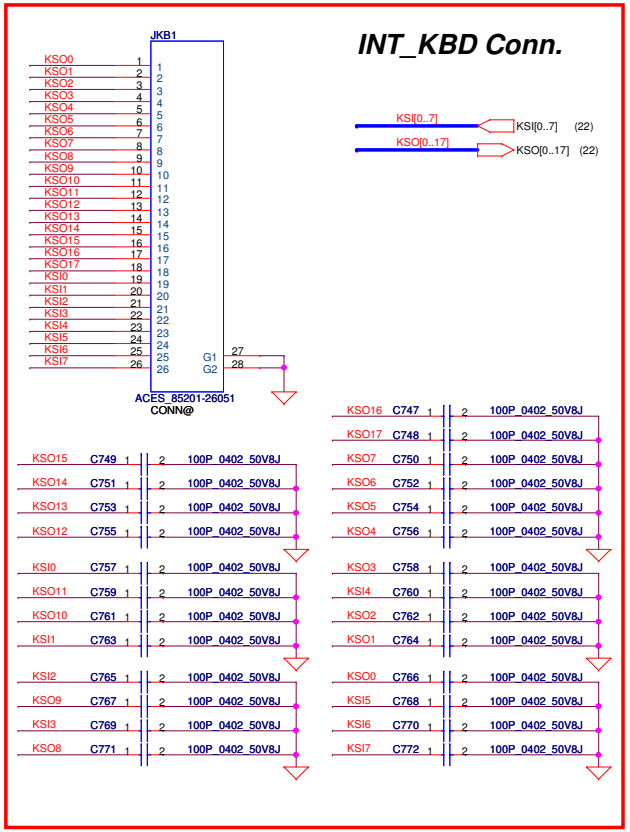

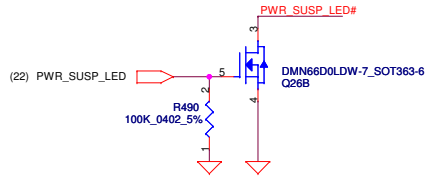

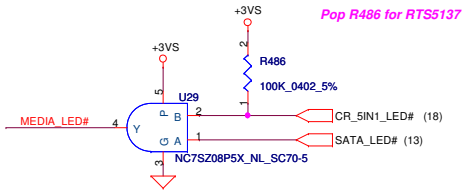

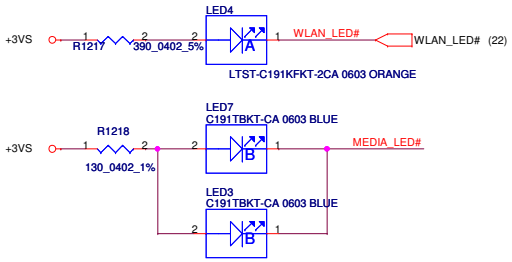

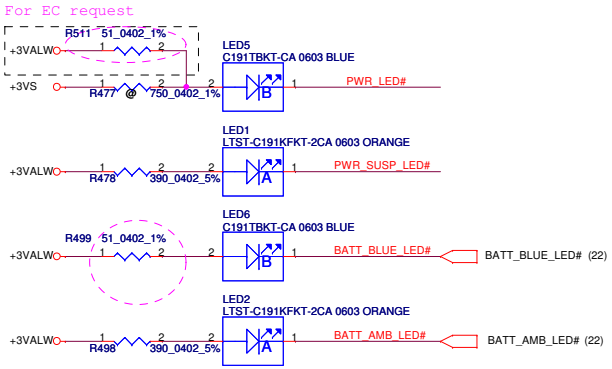

Security Classification	Compal Secret Data		
Issued Date	2010/08/04	Deciphered Date	2010/08/04

THIS SHEET OF ENGINEERING DRAWING IS THE PROPRIETARY PROPERTY OF COMPAL ELECTRONICS, INC. AND CONTAINS CONFIDENTIAL AND TRADE SECRET INFORMATION. THIS SHEET MAY NOT BE TRANSFERED FROM THE CUSTODY OF THE COMPETENT DIVISION OF R&D DEPARTMENT EXCEPT AS AUTHORIZED BY COMPAL ELECTRONICS, INC. NEITHER THIS SHEET NOR THE INFORMATION IT CONTAINS MAY BE USED BY OR DISCLOSED TO ANY THIRD PARTY WITHOUT PRIOR WRITTEN CONSENT OF COMPAL ELECTRONICS, INC.

Compal Electronics, Inc.

Title: KB/TP/LED/SPI ROM/PWRb

Size: Custom | Document Number: LA-8531P | Rev: 0.1

Date: Friday, March 02, 2012 | Sheet 23 of 37

WWW.FAQP.RU

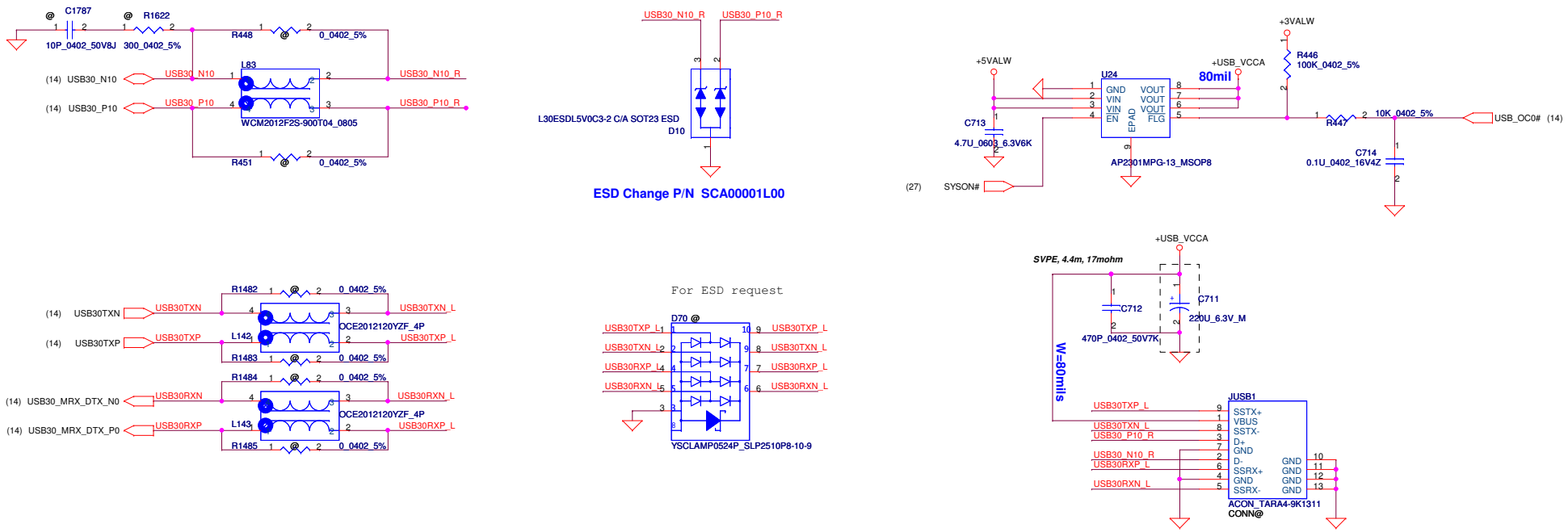

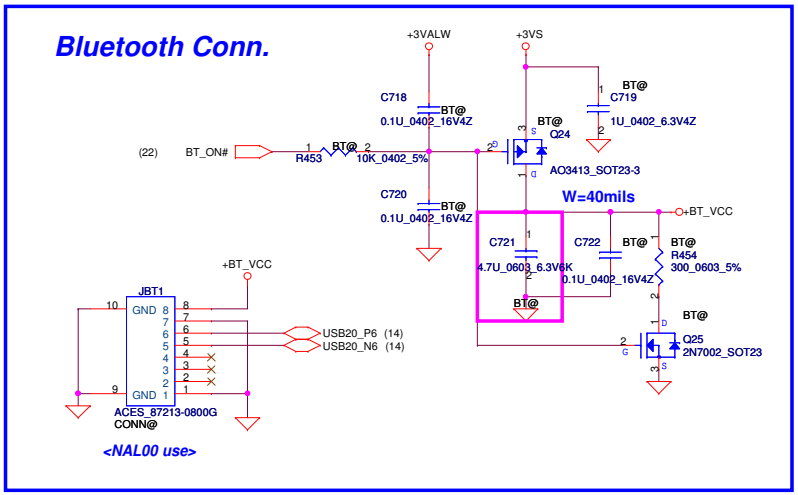

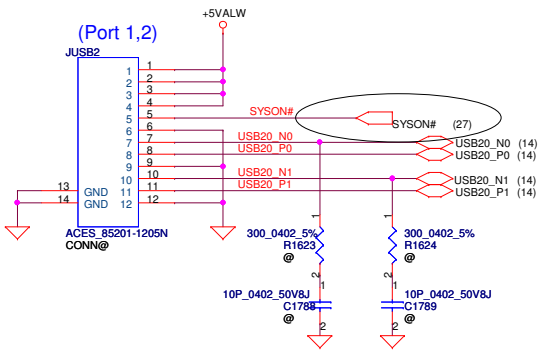

Security Classification	Compal Secret Data		
Issued Date	2010/08/04	Deciphered Date	2010/08/04

THIS SHEET OF ENGINEERING DRAWING IS THE PROPRIETARY PROPERTY OF COMPAL ELECTRONICS, INC. AND CONTAINS CONFIDENTIAL AND TRADE SECRET INFORMATION. THIS SHEET MAY NOT BE TRANSFERED FROM THE CUSTODY OF THE COMPETENT DIVISION OF R&D DEPARTMENT EXCEPT AS AUTHORIZED BY COMPAL ELECTRONICS, INC. NEITHER THIS SHEET NOR THE INFORMATION IT CONTAINS MAY BE USED BY OR DISCLOSED TO ANY THIRD PARTY WITHOUT PRIOR WRITTEN CONSENT OF COMPAL ELECTRONICS, INC.

Compal Electronics, Inc.

Title: USB/BT

Size: Custom | Document Number: LA-8531P | Rev: 0.1

Date: Friday, March 02, 2012 | Sheet 24 of 37

Mini-Express Card for WLAN

WWW.FAQP.RU

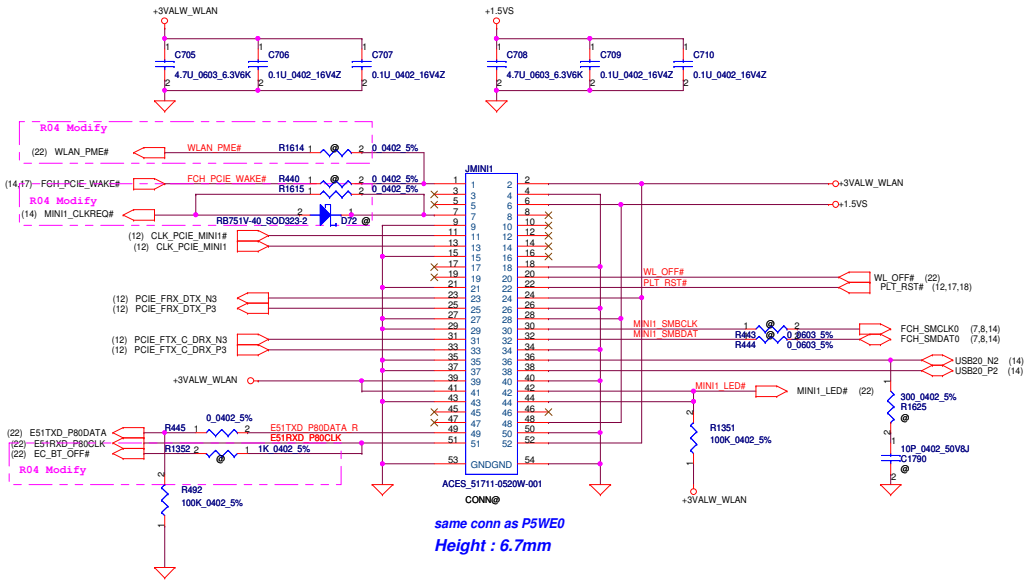

same conn as P5WE0

Height : 6.7mm

Mini Card Power Rating			
Power	Primary Power (mA)		Auxiliary Power (mA)
	Peak	Normal	Normal
+3VS	1000	750	
+3V	330	250	250 (wake enable)
+1.5VS	500	375	5 (Not wake enable)

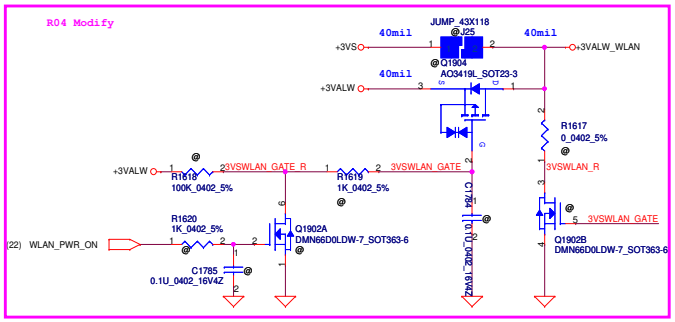

Security Classification	Compal Secret Data		
Issued Date	2010/08/04	Deciphered Date	2010/08/04

THIS SHEET OF ENGINEERING DRAWING IS THE PROPRIETARY PROPERTY OF COMPAL ELECTRONICS, INC. AND CONTAINS CONFIDENTIAL AND TRADE SECRET INFORMATION. THIS SHEET MAY NOT BE TRANSFERED FROM THE CUSTODY OF THE COMPETENT DIVISION OF R&D DEPARTMENT EXCEPT AS AUTHORIZED BY COMPAL ELECTRONICS, INC. NEITHER THIS SHEET NOR THE INFORMATION IT CONTAINS MAY BE USED BY OR DISCLOSED TO ANY THIRD PARTY WITHOUT PRIOR WRITTEN CONSENT OF COMPAL ELECTRONICS, INC.

Compal Electronics, Inc.

Title: MINI CARD

Size: | Document Number: LA-8531P | Rev: 0.1

Date: Friday, March 02, 2012 | Sheet 25 of 37

WWW.FAQP.RU

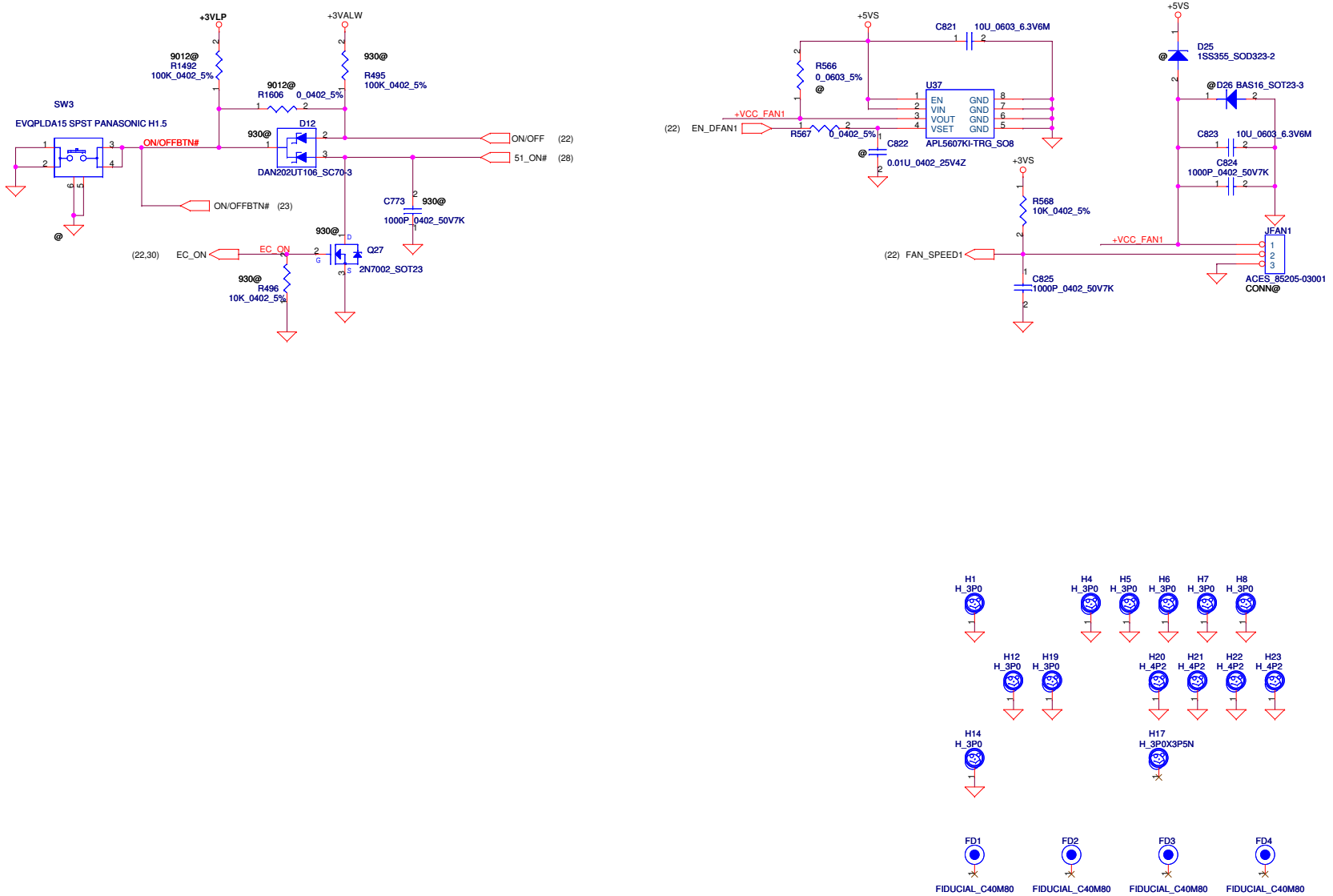

Security Classification	Compal Secret Data		
Issued Date	2010/08/04	Deciphered Date	2010/08/04

THIS SHEET OF ENGINEERING DRAWING IS THE PROPRIETARY PROPERTY OF COMPAL ELECTRONICS, INC. AND CONTAINS CONFIDENTIAL AND TRADE SECRET INFORMATION. THIS SHEET MAY NOT BE TRANSFERED FROM THE CUSTODY OF THE COMPETENT DIVISION OF R&D DEPARTMENT EXCEPT AS AUTHORIZED BY COMPAL ELECTRONICS, INC. NEITHER THIS SHEET NOR THE INFORMATION IT CONTAINS MAY BE USED BY OR DISCLOSED TO ANY THIRD PARTY WITHOUT PRIOR WRITTEN CONSENT OF COMPAL ELECTRONICS, INC.

Compal Electronics, Inc.

Title: Other IO/USB (right)

Size: Custom | Document Number: LA-8531P | Rev: 0.1

Date: Friday, March 02, 2012 | Sheet 26 of 37

WWW.FAQP.RU

+5VALW TO +5VS

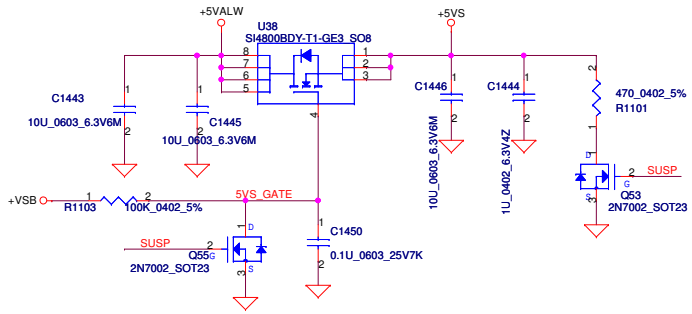

+1.1VALW TO +1.1VS

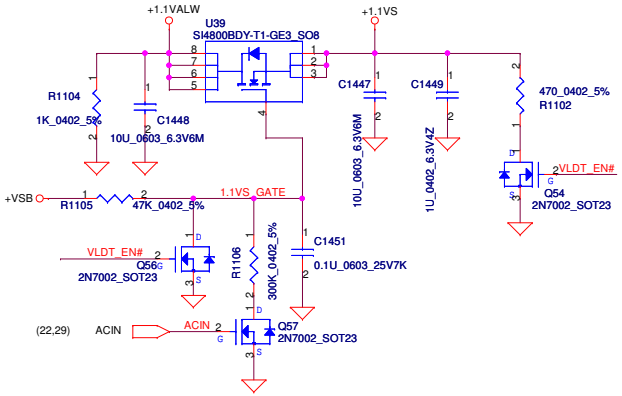

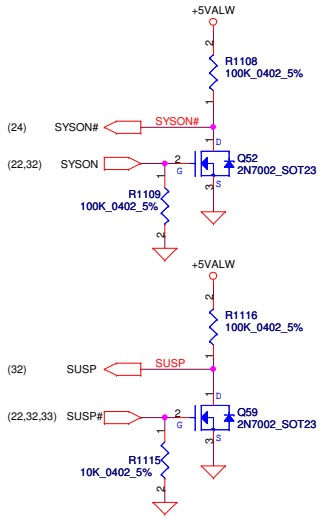

+3VALW TO +3VS

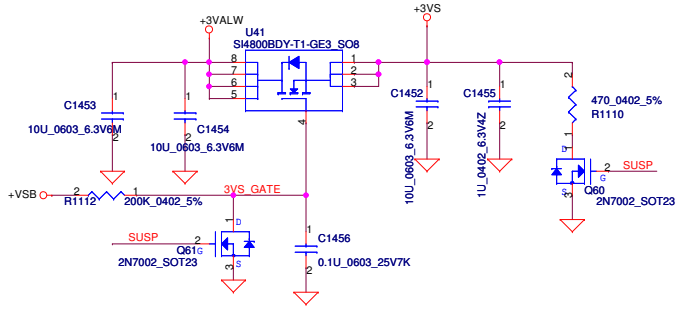

+1.5V TO +1.5VS

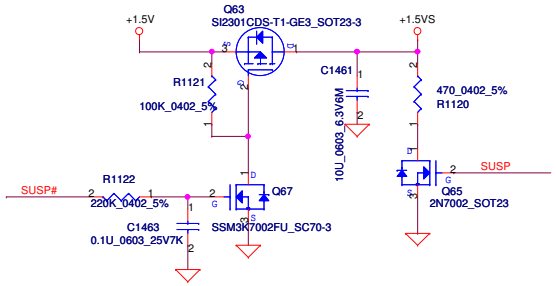

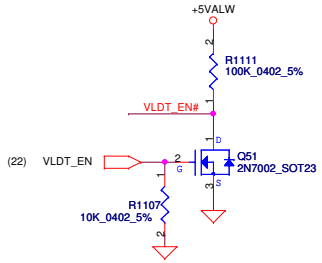

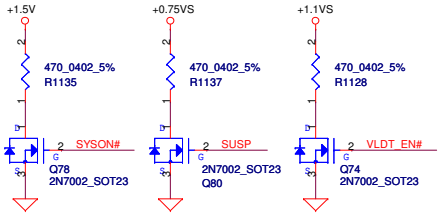

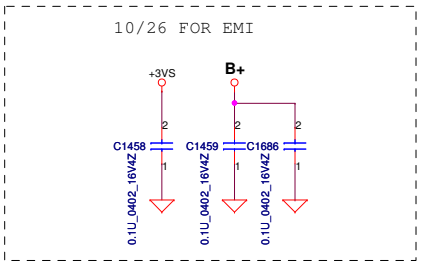

Security Classification	Compal Secret Data		
Issued Date	2010/08/04	Deciphered Date	2010/08/04

THIS SHEET OF ENGINEERING DRAWING IS THE PROPRIETARY PROPERTY OF COMPAL ELECTRONICS, INC. AND CONTAINS CONFIDENTIAL AND TRADE SECRET INFORMATION. THIS SHEET MAY NOT BE TRANSFERED FROM THE CUSTODY OF THE COMPETENT DIVISION OF R&D DEPARTMENT EXCEPT AS AUTHORIZED BY COMPAL ELECTRONICS, INC. NEITHER THIS SHEET NOR THE INFORMATION IT CONTAINS MAY BE USED BY OR DISCLOSED TO ANY THIRD PARTY WITHOUT PRIOR WRITTEN CONSENT OF COMPAL ELECTRONICS, INC.

Compal Electronics, Inc.

Title: DC Interface

Size: Custom | Document Number: LA-8531P | Rev: 0.1

Date: Friday, March 02, 2012 | Sheet 27 of 37

WWW.FAQP.RU

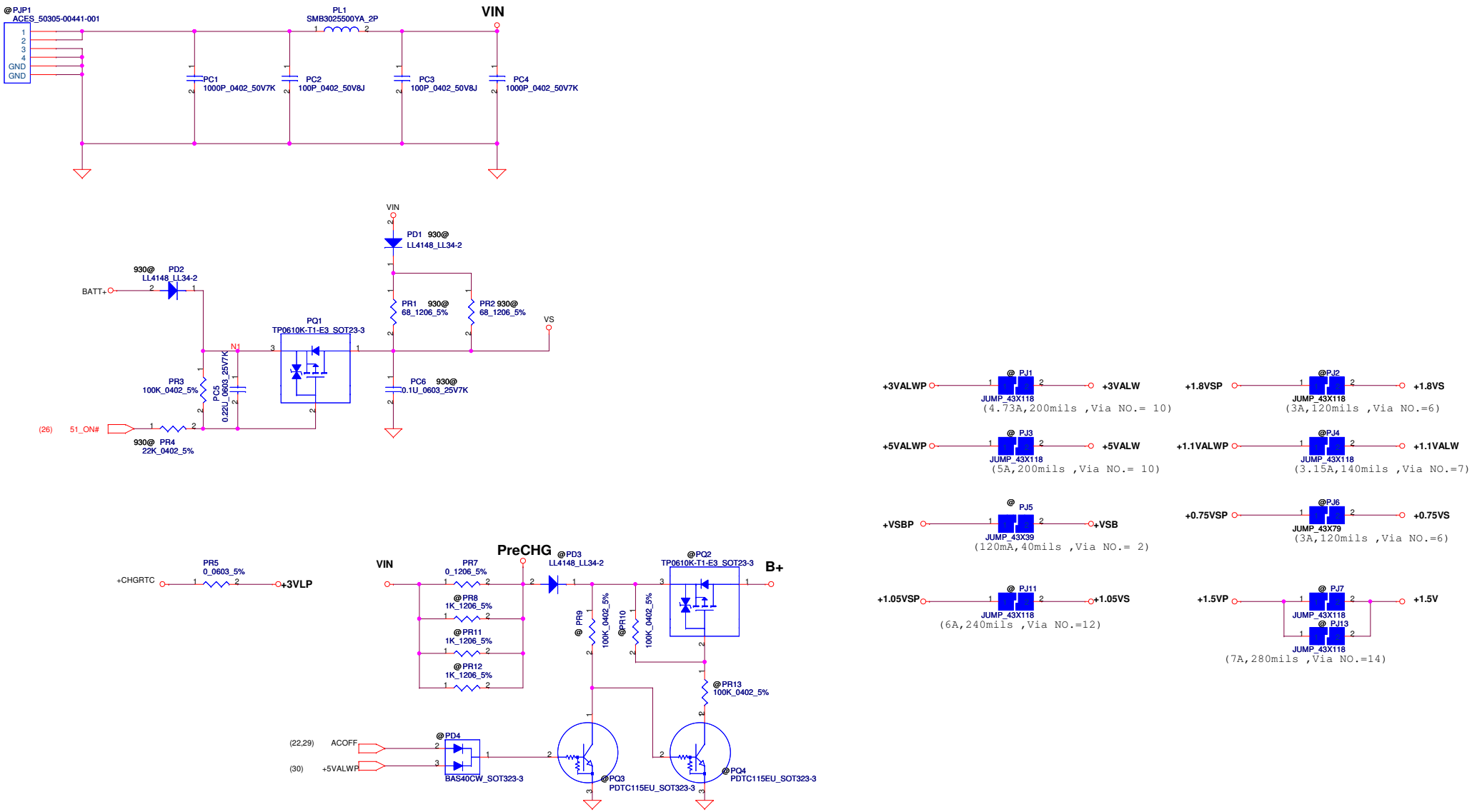

Security Classification	Compal Secret Data		
Issued Date	2010/07/13	Deciphered Date	2011/07/13

THIS SHEET OF ENGINEERING DRAWING IS THE PROPRIETARY PROPERTY OF COMPAL ELECTRONICS, INC. AND CONTAINS CONFIDENTIAL AND TRADE SECRET INFORMATION. THIS SHEET MAY NOT BE TRANSFERED FROM THE CUSTODY OF THE COMPETENT DIVISION OF R&D DEPARTMENT EXCEPT AS AUTHORIZED BY COMPAL ELECTRONICS, INC. NEITHER THIS SHEET NOR THE INFORMATION IT CONTAINS MAY BE USED BY OR DISCLOSED TO ANY THIRD PARTY WITHOUT PRIOR WRITTEN CONSENT OF COMPAL ELECTRONICS, INC.

Compal Electronics, Inc.

Title: **PWR DCIN / Pre-charge**

Size: Custom | Document Number: **Q5WT6 M/B LA-8531 Schematic** | Rev: 0.1

Date: Friday, March 02, 2012 | Sheet 28 of 37

Iada=0~3.421A(40W/19V=3.421A)

ADP_I = 19.9*Iadapter*Rsense

CP = 85%*Iada ; CP = 2.91A

WWW.FAQP.RU

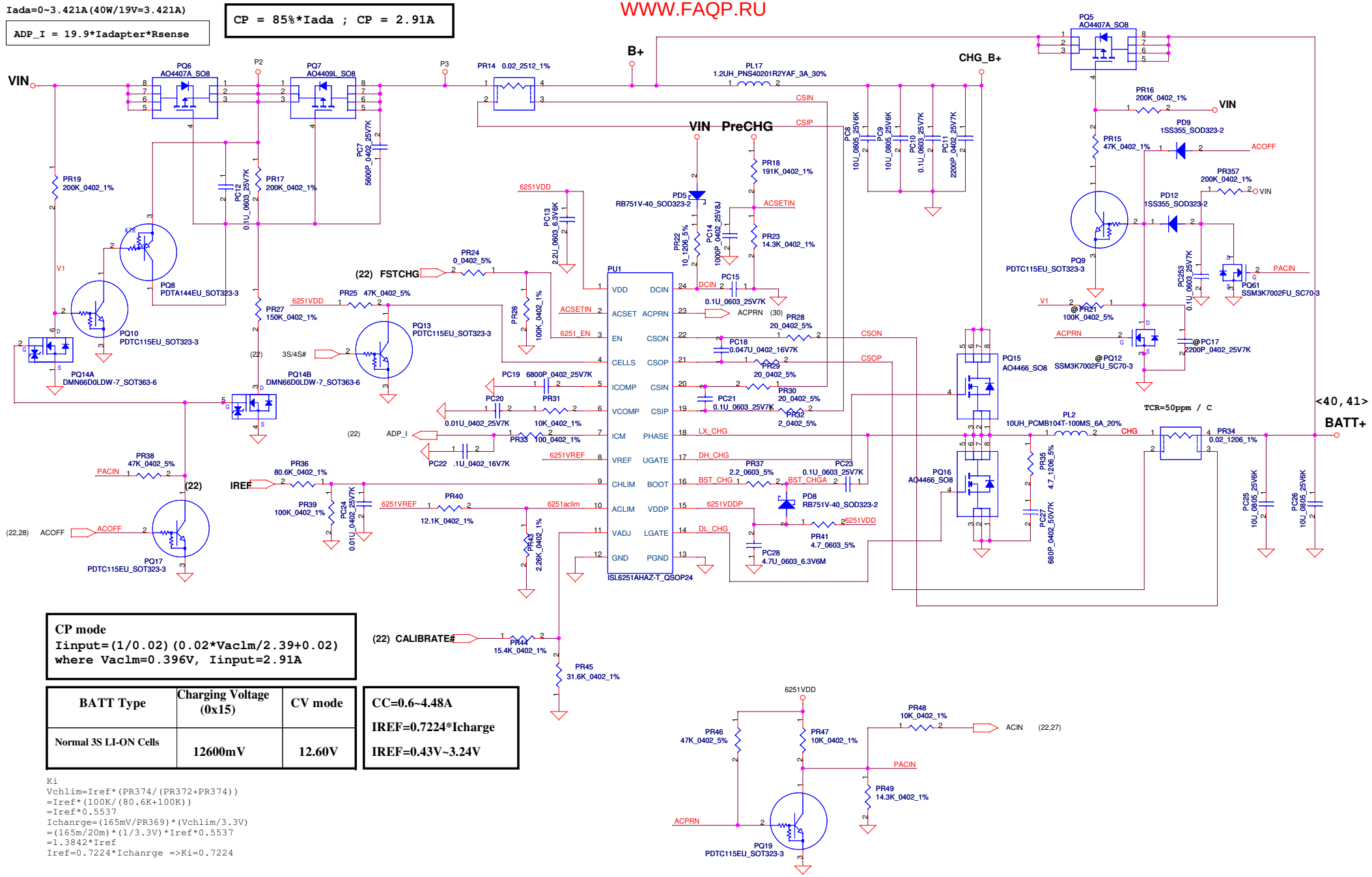

CP mode
Iinput=(1/0.02)(0.02*Vaclm/2.39+0.02)
where Vaclm=0.396V, Iinput=2.91A

BATT Type	Charging Voltage (0x15)	CV mode
Normal 3S LI-ON Cells	12600mV	12.60V

CC=0.6~4.48A

IREF=0.7224*Icharge

IREF=0.43V~3.24V

```
Ki
Vchlim=Iref*(PR374/(PR372+PR374))
=Iref*(100K/(80.6K+100K))
=Iref*0.5537
Ichanrge=(165mV/PR369)*(Vchlim/3.3V)
=(165m/20m)*(1/3.3V)*Iref*0.5537
=1.3842*Iref
Iref=0.7224*Ichanrge =>Ki=0.7224


Kv
Rinternal ic=514K  Rec=3K  R1=PR379=15.4K  R2=PR381=31.6K
R=514K//31.6K//(15.4K+3k)=11.372K
r=514K//514K//31.6K=28.14K
Vcell=0.175*Vadj+3.99v
4.2V=0.175*Vadj+3.99V =>Vadj=1.2V
Vadj=Vref*(R/(R+514K))+CALIBRATE*(r/(r=514K))
1.1483=CALIBRATE*0.6046 =>CALIBRATE=1.899
1.899=(4.2-(Vcell+A*0.175))*Kv=(4.2-(4.2+A*0.175))*Kv
A=Vref*(R/(R+514K))=0.052
Kv=9.451
```

Security Classification	Compal Secret Data		
Issued Date	2010/07/13	Deciphered Date	2011/07/13

THIS SHEET OF ENGINEERING DRAWING IS THE PROPRIETARY PROPERTY OF COMPAL ELECTRONICS, INC. AND CONTAINS CONFIDENTIAL AND TRADE SECRET INFORMATION. THIS SHEET MAY NOT BE TRANSFERED FROM THE CUSTODY OF THE COMPETENT DIVISION OF R&D DEPARTMENT EXCEPT AS AUTHORIZED BY COMPAL ELECTRONICS, INC. NEITHER THIS SHEET NOR THE INFORMATION IT CONTAINS MAY BE USED BY OR DISCLOSED TO ANY THIRD PARTY WITHOUT PRIOR WRITTEN CONSENT OF COMPAL ELECTRONICS, INC.

Compal Electronics, Inc.

Title: PWR-CHARGER

Size: Custom | Document Number: Q5WT6 M/B LA-8531 Schematic | Rev: 0.1

Date: Friday, March 02, 2012 | Sheet 29 of 37

WWW.FAQP.RU

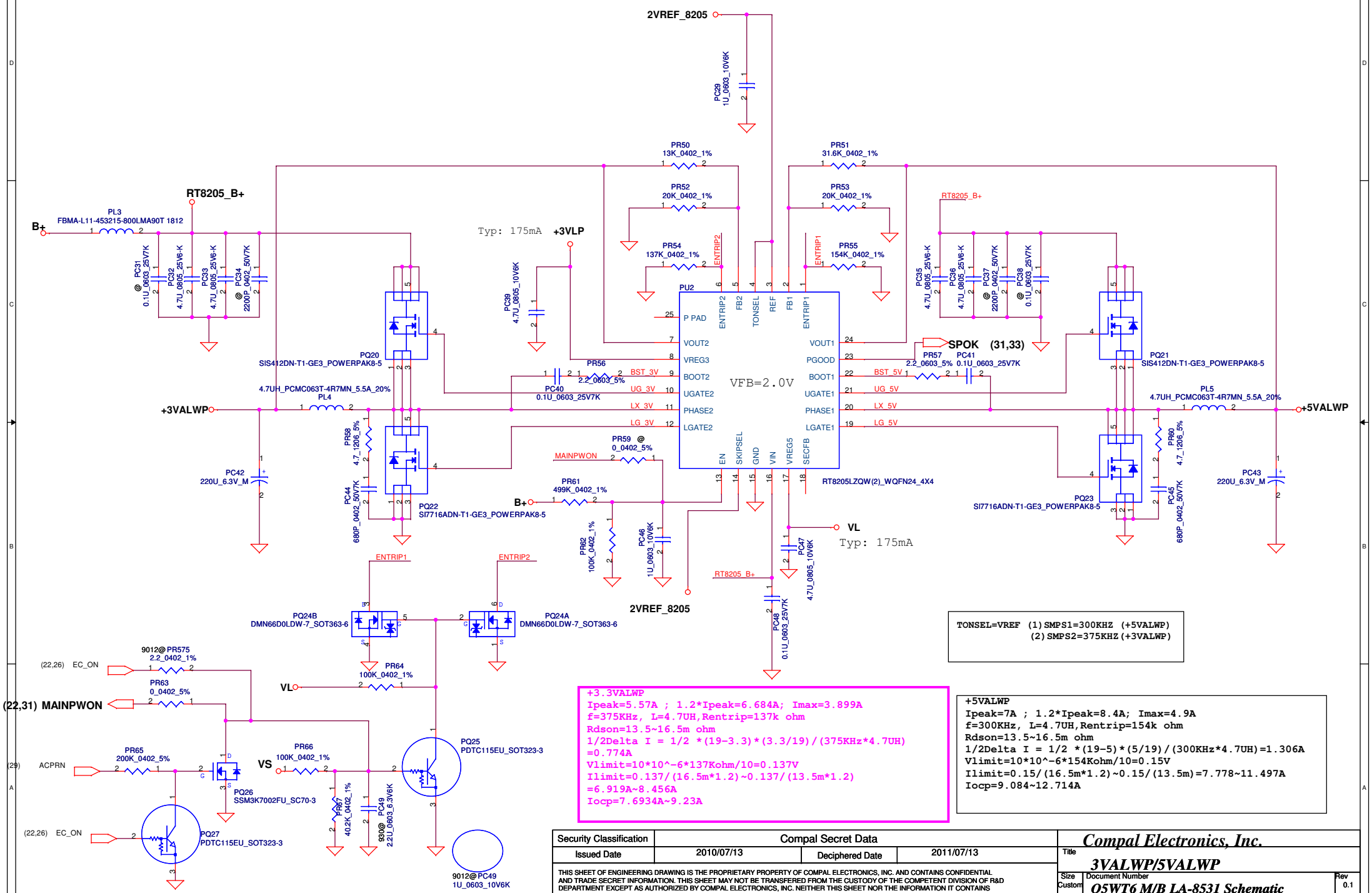

TONSEL=VREF (1)SMPS1=300KHZ (+5VALWP)
(2)SMPS2=375KHZ (+3VALWP)

+3.3VALWP
Ipeak=5.57A ; 1.2*Ipeak=6.684A; Imax=3.899A
f=375KHz, L=4.7UH,Rentrip=137k ohm
Rdson=13.5~16.5m ohm
1/2Delta I = 1/2 *(19-3.3)*(3.3/19)/(375KHz*4.7UH)
=0.774A
Vlimit=10*10^-6*137Kohm/10=0.137V
Ilimit=0.137/(16.5m*1.2)~0.137/(13.5m*1.2)
=6.919A~8.456A
Iocp=7.6934A~9.23A

+5VALWP
Ipeak=7A ; 1.2*Ipeak=8.4A; Imax=4.9A
f=300KHz, L=4.7UH,Rentrip=154k ohm
Rdson=13.5~16.5m ohm
1/2Delta I = 1/2 *(19-5)*(5/19)/(300KHz*4.7UH)=1.306A
Vlimit=10*10^-6*154Kohm/10=0.15V
Ilimit=0.15/(16.5m*1.2)~0.15/(13.5m)=7.778~11.497A
Iocp=9.084~12.714A

Security Classification	Compal Secret Data		
Issued Date	2010/07/13	Deciphered Date	2011/07/13

THIS SHEET OF ENGINEERING DRAWING IS THE PROPRIETARY PROPERTY OF COMPAL ELECTRONICS, INC. AND CONTAINS CONFIDENTIAL AND TRADE SECRET INFORMATION. THIS SHEET MAY NOT BE TRANSFERED FROM THE CUSTODY OF THE COMPETENT DIVISION OF R&D DEPARTMENT EXCEPT AS AUTHORIZED BY COMPAL ELECTRONICS, INC. NEITHER THIS SHEET NOR THE INFORMATION IT CONTAINS MAY BE USED BY OR DISCLOSED TO ANY THIRD PARTY WITHOUT PRIOR WRITTEN CONSENT OF COMPAL ELECTRONICS, INC.

Compal Electronics, Inc.

Title: 3VALWP/5VALWP

Size: Custom | Document Number: Q5WT6 M/B LA-8531 Schematic | Rev: 0.1

Date: Friday, March 02, 2012 | Sheet 30 of 37

WWW.FAQP.RU

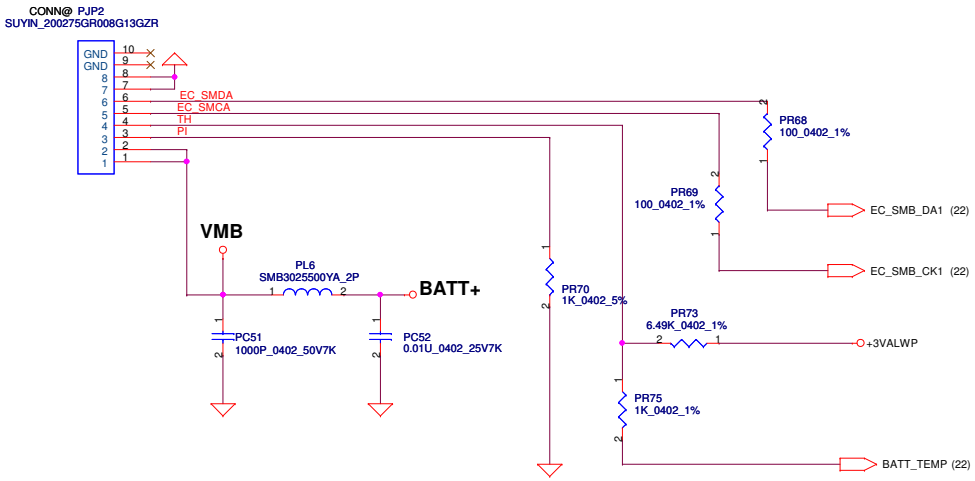

PH1 under CPU botten side :

CPU thermal protection at 92 degree C

Recovery at 56 degree C

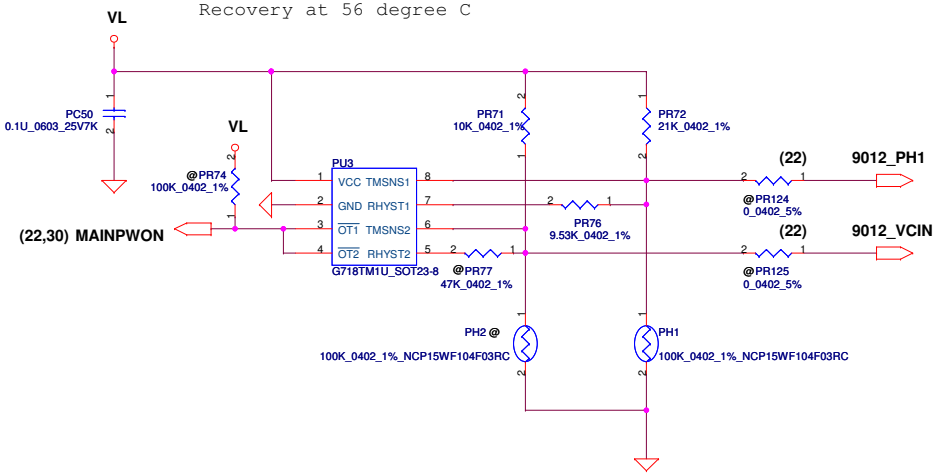

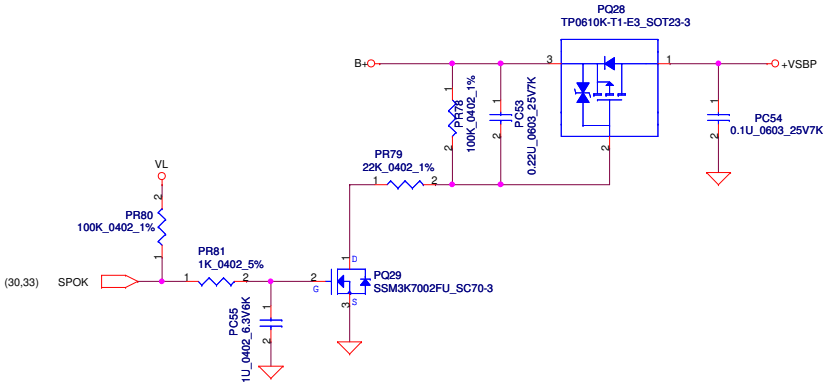

Security Classification	Compal Secret Data		
Issued Date	2010/07/13	Deciphered Date	2011/07/13

THIS SHEET OF ENGINEERING DRAWING IS THE PROPRIETARY PROPERTY OF COMPAL ELECTRONICS, INC. AND CONTAINS CONFIDENTIAL AND TRADE SECRET INFORMATION. THIS SHEET MAY NOT BE TRANSFERED FROM THE CUSTODY OF THE COMPETENT DIVISION OF R&D DEPARTMENT EXCEPT AS AUTHORIZED BY COMPAL ELECTRONICS, INC. NEITHER THIS SHEET NOR THE INFORMATION IT CONTAINS MAY BE USED BY OR DISCLOSED TO ANY THIRD PARTY WITHOUT PRIOR WRITTEN CONSENT OF COMPAL ELECTRONICS, INC.

Compal Electronics, Inc.

Title: ***PWR-BATTERY CONN/OTP***

Size: Custom | Document Number: ***Q5WT6 M/B LA-8531 Schematic*** | Rev: 0.1

Date: Friday, March 02, 2012 | Sheet 31 of 37

WWW.FAQP.RU

```
+1.5VP
Ipeak=7.7A ; 1.2*Ipeak=9.24A ;Imax=5.39A
1/2Delta I=2.305(F=300K Hz)
PR88=(1.2*Ipeak-1/2Delta I) *Rds(on)(max)*1.2/9uA=6.65Kohm
choose PR88=6.81Kohm (for safety >1.2Ipeak)
Rds(on)=6m ohm(max) ; Rds(on)=4.5m ohm(typical)
Ilimit_min=(6.81K*9uA)/(6m*1.2)=8.51A
Ilimit_max=(6.81K*9uA)/(4.5m*1.2)=11.35A
Iocp=Ilimit+1/2Delta I=10.81A~13.65A
Iocp(min)>1.2Ipeak
```

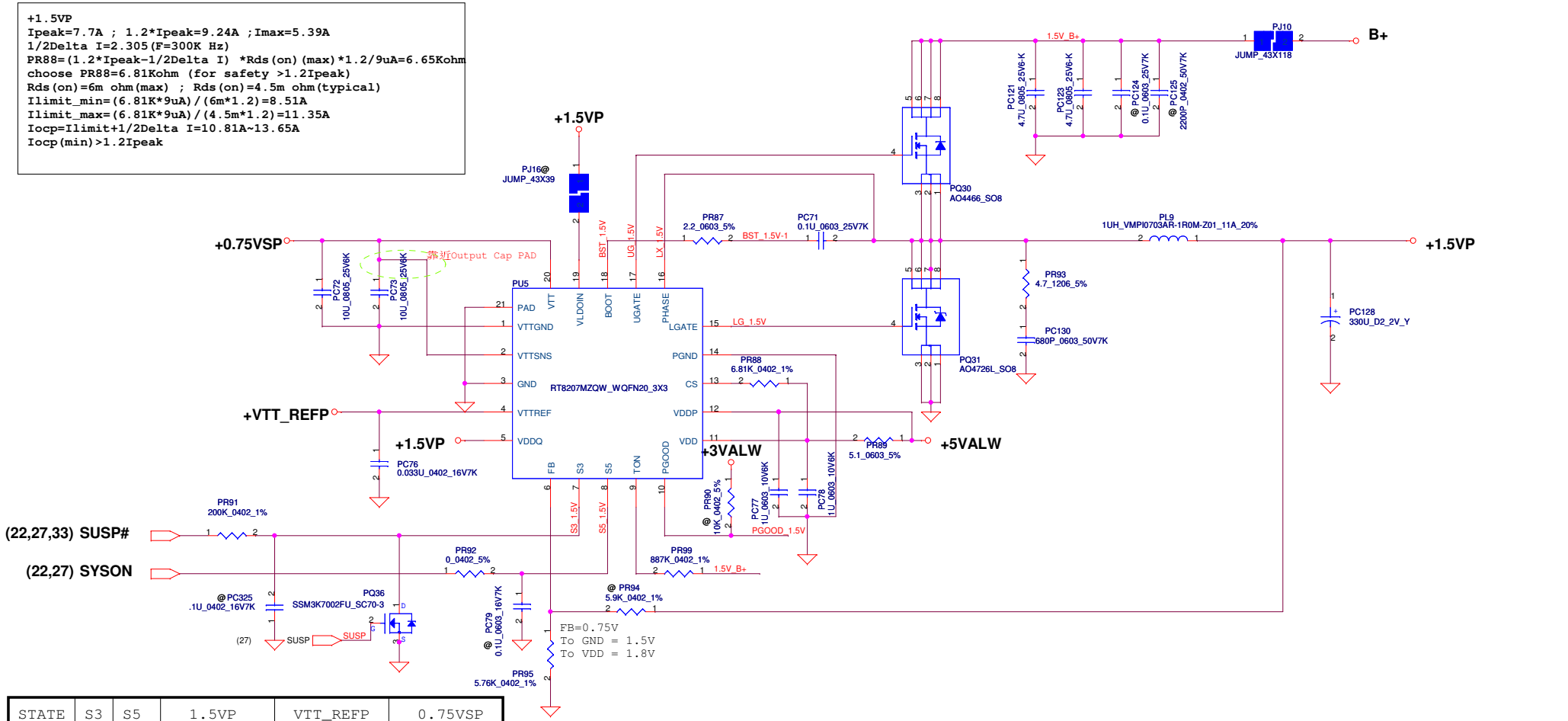

STATE	S3	S5	1.5VP	VTT_REFP	0.75VSP
S0	Hi	Hi	On	On	On
S3	Lo	Hi	On	On	Off (Hi-Z)
S4/S5	Lo	Lo	Off (Discharge)	Off (Discharge)	Off (Discharge)
Note: S3 - sleep ; S5 - power off					

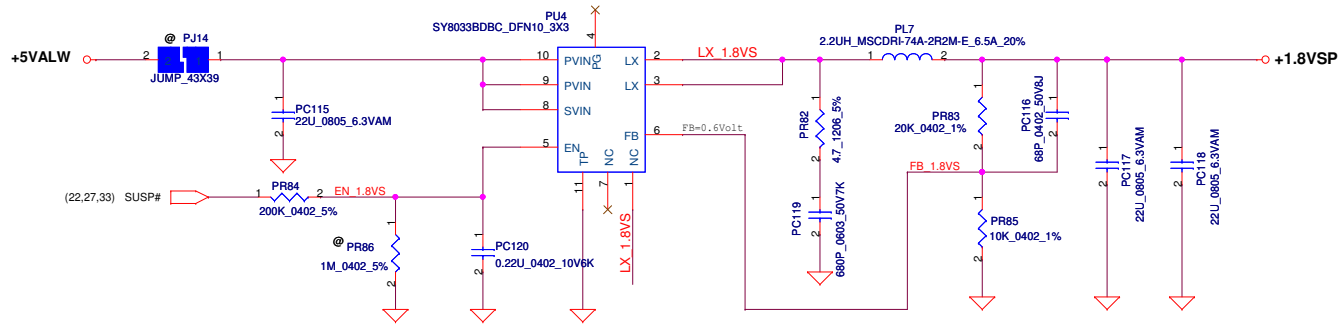

Security Classification	Compal Secret Data		
Issued Date	2010/01/25	Deciphered Date	2009/04/28

THIS SHEET OF ENGINEERING DRAWING IS THE PROPRIETARY PROPERTY OF COMPAL ELECTRONICS, INC. AND CONTAINS CONFIDENTIAL AND TRADE SECRET INFORMATION. THIS SHEET MAY NOT BE TRANSFERED FROM THE CUSTODY OF THE COMPETENT DIVISION OF R&D DEPARTMENT EXCEPT AS AUTHORIZED BY COMPAL ELECTRONICS, INC. NEITHER THIS SHEET NOR THE INFORMATION IT CONTAINS MAY BE USED BY OR DISCLOSED TO ANY THIRD PARTY WITHOUT PRIOR WRITTEN CONSENT OF COMPAL ELECTRONICS, INC.

Compal Electronics, Inc.

Title: 1.8VSP/1.5VP/0.75VSP

Size: Custom | Document Number | Rev: 0.1

Date: Friday, March 02, 2012 | Sheet 32 of 37

WWW.FAQP.RU

VFB= 0.704V
Vo=VFB*(1+PR103/PR104)= 1.103V
Freq= 266~314KHz , 290KHz(typ)

Ipeak=4.5A ;1.2*Ipeak=5.4A ;Imax=3.15A
1/2Delta I=0.785A (F=290K Hz)
PR123=(1.2Ipeak-1/2Delta I) *Rds(on)(max)*1.2*8/9uA=88.6Kohm
choose PR123=90.9Kohm (for safety >1.2Ipeak)
Rds(on)=18m ohm(max) ; Rds(on)=15m ohm(typical)
Ilimit_min=(90.9K*9uA)/(8*18m*1.2)=6.25A
Ilimit_max=(90.9K*9uA)/(8*15m*1.2)=7.5A
Iocp=Ilimit+1/2Delta I=7.035A~8.285A
Iocp(min)>1.2Ipeak

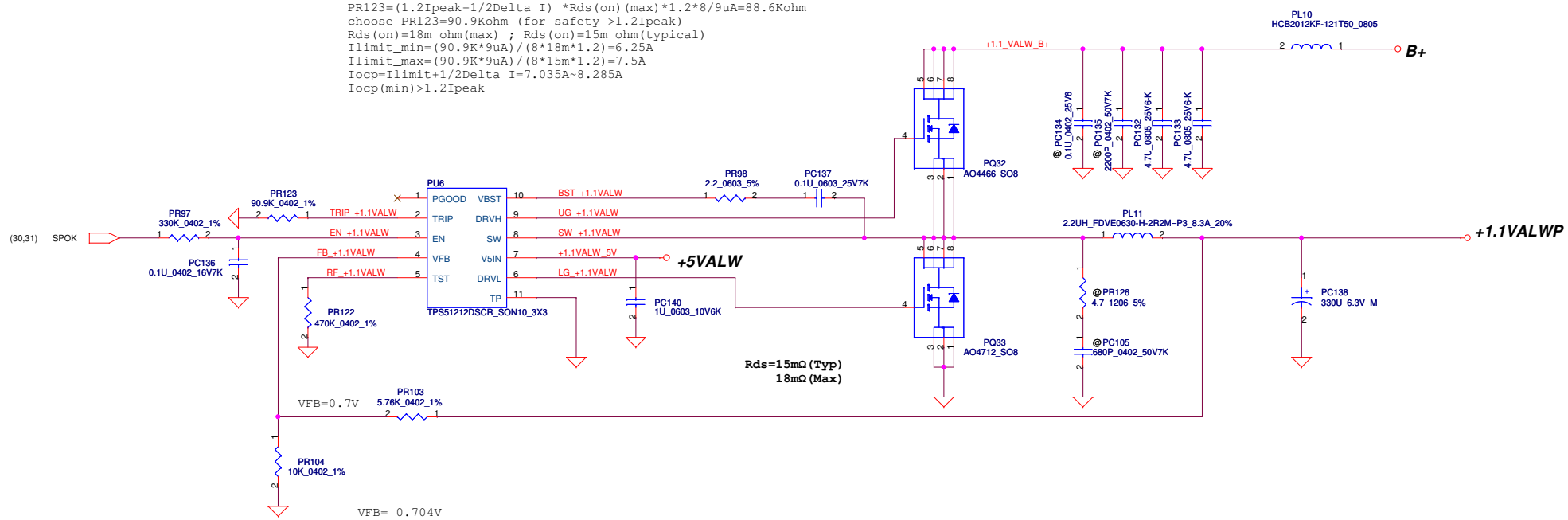

VFB= 0.704V
Vo=VFB*(1+PR121/PR120)= 1.05V
Freq= 266~314KHz , 290KHz(typ)

Ipeak=5.7A ;1.2*Ipeak=6.84A ;Imax=3.899A
1/2Delta I=0.751A (F=290K Hz)
PR112=(1.2Ipeak-1/2Delta I) *Rds(on)(max)*1.2*8/9uA=45.5Kohm
choose PR112=49.9Kohm (for safety >1.2Ipeak)
Rds(on)=7m ohm(max) ; Rds(on)=5.3m ohm(typical)
Ilimit_min=(49.9K*9uA)/(8*7m*1.2)=8.02A
Ilimit_max=(49.9K*9uA)/(8*5.3m*1.2)=10.592A
Iocp=Ilimit+1/2Delta I=8.771A~11.343A
Iocp(min)>1.2Ipeak

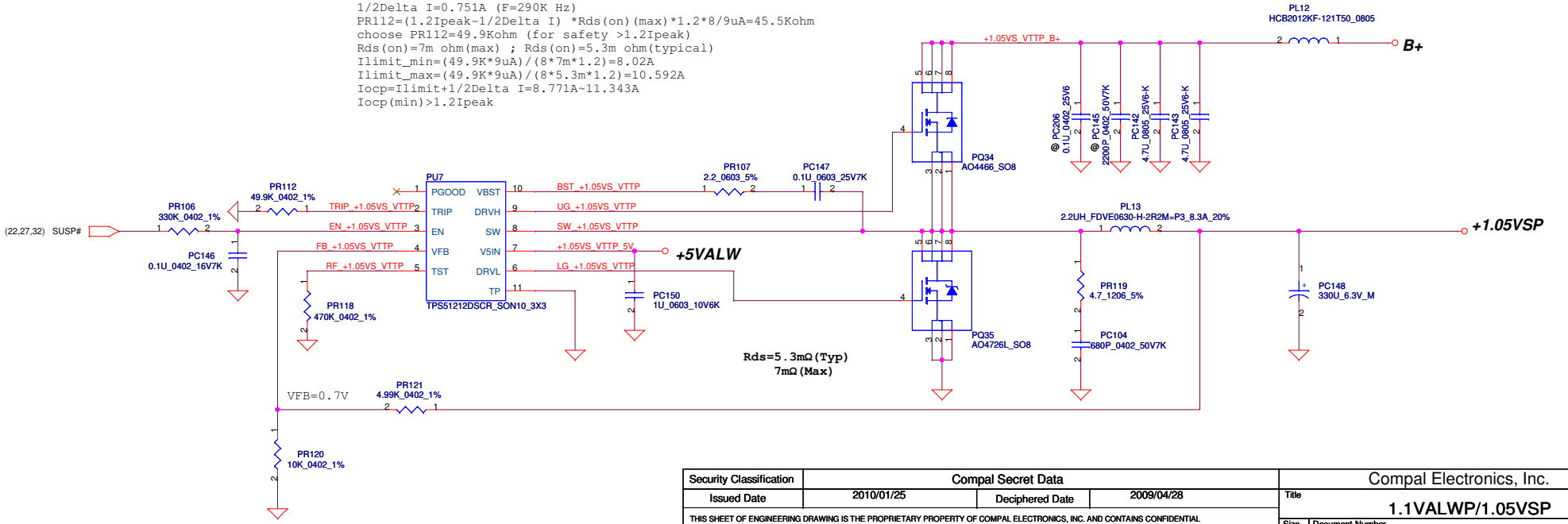

Security Classification	Compal Secret Data			Compal Electronics, Inc.
Issued Date	2010/01/25	Deciphered Date	2009/04/28	Title: 1.1VALWP/1.05VSP
				Size: Custom; Document Number: ; Rev: 0.1
				Date: Friday, March 02, 2012; Sheet 33 of 37

THIS SHEET OF ENGINEERING DRAWING IS THE PROPRIETARY PROPERTY OF COMPAL ELECTRONICS, INC. AND CONTAINS CONFIDENTIAL AND TRADE SECRET INFORMATION. THIS SHEET MAY NOT BE TRANSFERED FROM THE CUSTODY OF THE COMPETENT DIVISION OF R&D DEPARTMENT EXCEPT AS AUTHORIZED BY COMPAL ELECTRONICS, INC. NEITHER THIS SHEET NOR THE INFORMATION IT CONTAINS MAY BE USED BY OR DISCLOSED TO ANY THIRD PARTY WITHOUT PRIOR WRITTEN CONSENT OF COMPAL ELECTRONICS, INC.

WWW.FAQP.RU

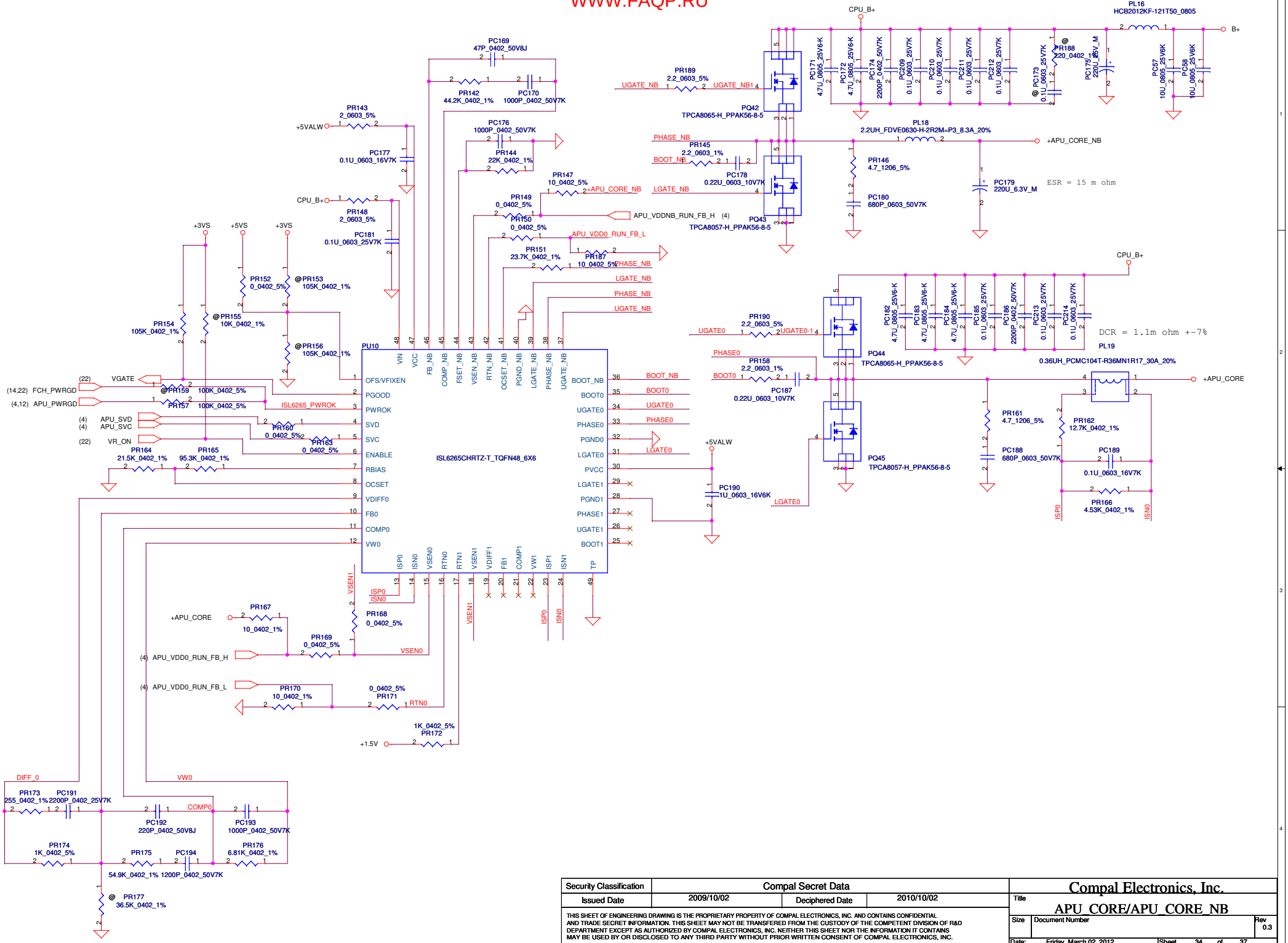

Security Classification	Compal Secret Data		
Issued Date	2009/10/02	Deciphered Date	2010/10/02

THIS SHEET OF ENGINEERING DRAWING IS THE PROPRIETARY PROPERTY OF COMPAL ELECTRONICS, INC. AND CONTAINS CONFIDENTIAL AND TRADE SECRET INFORMATION. THIS SHEET MAY NOT BE TRANSFERED FROM THE CUSTODY OF THE COMPETENT DIVISION OF R&D DEPARTMENT EXCEPT AS AUTHORIZED BY COMPAL ELECTRONICS, INC. NEITHER THIS SHEET NOR THE INFORMATION IT CONTAINS MAY BE USED BY OR DISCLOSED TO ANY THIRD PARTY WITHOUT PRIOR WRITTEN CONSENT OF COMPAL ELECTRONICS, INC.

Compal Electronics, Inc.

Title: APU_CORE/APU_CORE_NB

Size | Document Number | Rev 0.3

Date: Friday, March 02, 2012 | Sheet 34 of 37

WWW.FAQP.RU

Version change list (P.I.R. List)

Item	Fixed Issue	Reason for change	Rev.	PG#	Modify List	Date	Phase
1		Modify 40W adapter CP point	0.1	29	PR14 change to SD00000CI10 (S RES 1/2W 0.05 +-1% 1206 100PPM/C) PR40 change to SD034470180 (S RES 1/16W 4.7K +-1% 0402)	2011/10/28	EVT
2		Modify +1.05VSP OCP	0.1	33	PR112 change to SD034499280 (S RES 1/16W 49.9K +-1% 0402)	2011/10/28	EVT
3		Modify +1.1VALWP OCP	0.1	33	PR123 change to SD034909280 (S RES 1/16W 90.9K +-1% 0402)	2011/10/28	EVT
4		Modify +1.5VP OCP	0.1	32	PR88 change to SD034681180 (S RES 1/16W 6.81K +-1% 0402)	2011/10/28	EVT
5		Modify ISN CHOKE P/N	0.1	29	PL17 change to SH00000N300 (S COIL 1.2UH +-30% PNS40201R2YAF 3A)	2011/10/28	EVT
6		Modify bead P/N	0.1	30	PL3 change to SM01000JF00 (S SUPPRE_ FBMA-L11-453215-800LMA90T 1812)	2011/10/28	EVT
7		Change boost resister from 0 ohm to 2.2 ohm for RT8207 & TPS51125	0.1	30	PR87 & PR98 & PR107 change from 0 ohm to 2.2 ohm	2011/11/17	EVT2
8		Modify power sequence for RT8207(+1.5VP & 0.75VSP)	0.1	30	PR91 change from 0 ohm to 200K ohm	2011/11/17	EVT2
9		Modify compoment P/N for material issue	0.1	29	PQ7 change from SB00000I600(S TR SI4459ADY-T1-GE3 1P SO8) to SB00000JD10 (S TR AO4409L 1P SO8)	2011/11/23	EVT2
10		design change for EC(9012)	0.1	28	delete PD1,PD2,PR1,PR2,PR4,PC6	2011/11/28	EVT2
11		design change for EC(9012)	0.1	29	add PR575(S RES 1/16W 2.2 +-1% 0402) PC49 change to 1U_0603_10V6K	2011/11/28	EVT2
12		design change for EC(9012)	0.1	31	add PR124(0_0402_5%)	2011/11/28	EVT2
13		Improve EMI performance	0.2		change PR56,PR57 from 0 ohm to 2.2 ohm	2011/12/20	DVT
14					add PR58,PR60,PR93,PR119 (SD001470B80,S RES 1/4W 4.7 +-5% 1206) add PC44,PC45,PC104 (SE074681K80,S CER CAP 680P 50V K X7R 0402)		
15					add PC130 (SE025681K80,S CER CAP 680P 50V K X7R 0603) change PR189,PR190 from 0 ohm to 2.2 ohm		
16		Modify +5VALW voltage for USB port voltage drop (HW request +5VALW up 3%)	0.2	31	change PR51 from 30K ohm to 31.6K ohm	2011/12/20	DVT

Security Classification	Compal Secret Data		
Issued Date	2010/04/12	Deciphered Date	2010/10/12

THIS SHEET OF ENGINEERING DRAWING IS THE PROPRIETARY PROPERTY OF COMPAL ELECTRONICS, INC. AND CONTAINS CONFIDENTIAL AND TRADE SECRET INFORMATION. THIS SHEET MAY NOT BE TRANSFERED FROM THE CUSTODY OF THE COMPETENT DIVISION OF R&D DEPARTMENT EXCEPT AS AUTHORIZED BY COMPAL ELECTRONICS, INC. NEITHER THIS SHEET NOR THE INFORMATION IT CONTAINS MAY BE USED BY OR DISCLOSED TO ANY THIRD PARTY WITHOUT PRIOR WRITTEN CONSENT OF COMPAL ELECTRONICS, INC.

Compal Electronics, Inc.

Title: PIR (PWR)

Size: Custom | Document Number: Q5WT6 LA-8531 | Rev: 0.1

Date: Friday, March 02, 2012 | Sheet 35 of 37

WWW.FAQP.RU

Version change list (P.I.R. List)

Item	Fixed Issue	Reason for change	Rev.	PG#	Modify List	Date	Phase
1		Modify compoment P/N for material shortage issue	0.2		change PC8,PC9,PC25,PC26,PC57,PC58 to SE00000QK00 (S CER CAP 10U 25V K X5R 0805 H1.25	2011/12/20	DVT
2		Change OTP from 9012 to G718	0.2	31	Delete PR124 (0_0402_5%)	2011/12/28	DVT
3		Change CP for 65W adapter	0.3	29	Change PR14 from SD00000CI10(S RES 1/2W 0.05 +-1% 1206 100PPM/C) to SD000001F00 (S RES 1W .02 +-1% 2512)	2012/2/6	PVT
4		Change CP for 65W adapter	0.3	29	Change PR40 from 4.7K to 4.7K Change PR43 from 20K to 2.26K	2012/2/6	PVT
5		Modify for compoment common P/N	0.3	32	change PQ36 from SB000009Q80 to SB000009610	2012/2/13	PVT
6		Modify for compoment P/N for cost concern	0.3	32	change PC128 from SGA00002280 (S POLY C 330U 2.5V Y D2 LESR15M CX H1.9) to SGA20331E10 (S POLY C 330U 2V Y D2 LESR9M EEFSX H1.9)	2012/2/24	PVT
7							
8							
9							
10							
11							
12							
13							
14							
15							
16							

Security Classification	Compal Secret Data		
Issued Date	2010/04/12	Deciphered Date	2010/10/12

THIS SHEET OF ENGINEERING DRAWING IS THE PROPRIETARY PROPERTY OF COMPAL ELECTRONICS, INC. AND CONTAINS CONFIDENTIAL AND TRADE SECRET INFORMATION. THIS SHEET MAY NOT BE TRANSFERED FROM THE CUSTODY OF THE COMPETENT DIVISION OF R&D DEPARTMENT EXCEPT AS AUTHORIZED BY COMPAL ELECTRONICS, INC. NEITHER THIS SHEET NOR THE INFORMATION IT CONTAINS MAY BE USED BY OR DISCLOSED TO ANY THIRD PARTY WITHOUT PRIOR WRITTEN CONSENT OF COMPAL ELECTRONICS, INC.

Compal Electronics, Inc.

Title: PIR (PWR)

Size: Custom | Document Number: Q5WT6 LA-8531 | Rev: 0.1

Date: Friday, March 02, 2012 | Sheet 36 of 37

WWW.FAQP.RU

2011/10/06
P13. DEL net SMIB(R1219)
for EMC request
P17. change C940 to 120PF (SE00000U400)
P23. modify C747~C772 BOM structure
for ESD request
P17. modify D58 BOM structure
P19. modify D49 D51 BOM structure
P20. moidfy D52 D55 D63 D68 BOM structure
P24. modify D10 BOM structure

2011/10/11
P26. del H6
update PWR schematic

2011/10/14
for ESD request
P19. change D56 to SCA00001A00
update PWR schematic
P25. change C1576 to 150UF
P24. change JUSB1 to DC233007O00

2011/10/18
update PWR schematic

2011/10/19
P02. update page no.
P19. change U100,pin26 to AGND
P21. add JTP2
P26. del H28,29 add H28_3P0
update PWR schematic

2011/10/24
P09. R393 pin1 change to +3VS
R396 change to 0402 size
P27. R1101,R1102,R1110,R1120,R1128,R1135,R1137
change to 0402 size
for EMC request
P17. change C940 to 100pf SE00000U900

2011/10/26
for EMC request
P27. modify C1457~C1460, Add C1686
for EC request
P22. Add C1685
for PWR request
P30. change PL3 to SM01000JF00

2011/10/28
P02. update block diagram
P19. change JUMP location to J18~J23

2011/10/31
update PWR schematic

2011/11/18
P12. Change chipset to M3L
P14. Add GPIO189 for panel BOM control
P22. co-lay KB930/9012
P23. update JTP1 footprint
P25. Del JMINI2
P27. Del U95
update power schematic

2011/11/23
P23. D11@, D13@ for ESD
P26. Add R1606
update power schematic

2011/11/24b
P24. modify JUSB2 net name
P14. change EDP status to GPIO187 and modfiy H/L
update power schematic

2011/11/25
P14. change LAN_CLKREQ# to U102.AG25
change MINI1_CLKREQ# to U102.AE24
P22. change VGATE to U26.97
change ACIN to U26.110
change 3S/4S# to U26.98

2011/11/29
P11. change L57~L59 to SM010005220 for CRT issue
P12. change U102 to SA00005DY10
P23. change SW1, SW2 to SN100000K00
update PWR schematic

2011/12/16
ADD ZERO@,1.4G@,1.7G@
P04. modiy R430,R431,R433,R434 0ohm symbol,change C237,C238 bom structure
P09. modiy R484 0ohm symbol
P12. ADD GPIO30,GPIO31,modify R1503~R1508,R1510~R1513 0ohm symbol
P13. change ODD_PWR to GPIO53
P14. DEL GPIO190
P17. modiy R909,R1144 0ohm symbol
P18. moidfy R1164 0ohm symbol
P22. chgnge R470 to 18K
P26. change SW3 to @

2011/12/19
P23. change LED1,2,4 to SC500005920
change LED3,5,6,7 to SC591TBKA10
P14. change ODD_DETECT# to U102_W7
change ODD_DA#_FCH to U102_P6

2011/12/21
update PWR schematic

2011/12/22
for ESD request
P06. add C1778,C1779
P12. add C1780
P18. add C1781
P22. add C1782
for small size request
change Y6,Y7 to SJ10000E500

2011/12/23
P11. mnodify L57~L59 symbol
P22. add R1611 pull high
add R1612 pull GND

2011/12/28
P13. modify U103 to SA00003K800
P22. modify R1611,1612 BOM structure
P23. change LED1,2,4 to SC500005930
update PWR schematic
for EMI request
P17. change T97,98 to SP050006H00
P18. change C124@,C1522 to 4.7P SE07147AB80
change R180@,R1168,R1165 to 10ohm SD028100A80
change C1519@ to 10P SE071100J80
for ESD request
P06. modify C1778 BOM structure
P18. modify C1781 BOM structure
P22. modify C1782 BOM structure

2012/01/20
add ODD@ for normal ODD
P12. Y7 change to SJ0000E800
P17. Y6 change to SJ0000E800
P18. C1522,C124 change to SE07147AC80
P21. change R955 to ODD@
P22. change R470 to SD028330200 for PVT BOARD ID
P23. R478,R498,R1217 change to SD028390080
R511,R499 change to SD000008H80
R1218 change to SD000003S80
P25. ADD +3VALW_WLAN net
ADD J24,J25 jump

2012/02/01
P09. Add J24
for AOIC
P17. Add R1613,C1783,Q1903,R1157
Add net LAN_PWR_EN#
P22. Add net WLAN_PWR_ON,LAN_PWR_EN#
EC_BT_OFF#,WLAN_PME#
P25. Del Q137,D69,J24 and net BT_ON#
Add net WLAN_PME#,EC_BT_OFF#,WLAN_PWR_ON
Add R1620,R1618,C1785,R1619,Q1902,Q1904,R1617

2012/02/02
P25. ADD R1621
for RTC
P12. C1704,C1705 change to SE071100J80
P17. C1485,C1486 change to SE071120J80

2012/02/07
update POWER schematic
update U22 to SA00005DX30,SA00005DW30
update U102 to SA00005DY70
P09. add R1621,C1786
P24. add R1622-24,C1787-89
P25. add R1625,C1790
del R1621
P04. del R169
change AMD Debug compoment to @

2012/02/09
P13. add R1626

2012/02/13
P13. change R1626 Bom structure
update PWR schematic

2012/03/02
P26. add H29 H30 for ME request
update PWR schematic

2012/03/05
P22. change R470 to 56K

Security Classification	Compal Secret Data		
Issued Date	2010/08/20	Deciphered Date	2011/08/20

THIS SHEET OF ENGINEERING DRAWING IS THE PROPRIETARY PROPERTY OF COMPAL ELECTRONICS, INC. AND CONTAINS CONFIDENTIAL AND TRADE SECRET INFORMATION. THIS SHEET MAY NOT BE TRANSFERED FROM THE CUSTODY OF THE COMPETENT DIVISION OF R&D DEPARTMENT EXCEPT AS AUTHORIZED BY COMPAL ELECTRONICS, INC. NEITHER THIS SHEET NOR THE INFORMATION IT CONTAINS MAY BE USED BY OR DISCLOSED TO ANY THIRD PARTY WITHOUT PRIOR WRITTEN CONSENT OF COMPAL ELECTRONICS, INC.

Compal Electronics, Inc.

Title: **HW-PIR**

Size: B | Document Number: **LA-8531P** | Rev: 0.2

Date: Monday, March 05, 2012 | Sheet 37 of 37