Compal Confidential

QCL40 MB Schematic Document

LA-8224P

Rev: 0.2

2011.09.28

Security Classification	Compal Secret Data		
Issued Date	2011/07/12	Deciphered Date	2012/12/31

THIS SHEET OF ENGINEERING DRAWING IS THE PROPRIETARY PROPERTY OF COMPAL ELECTRONICS, INC. AND CONTAINS CONFIDENTIAL AND TRADE SECRET INFORMATION. THIS SHEET MAY NOT BE TRANSFERED FROM THE CUSTODY OF THE COMPETENT DIVISION OF R&D DEPARTMENT EXCEPT AS AUTHORIZED BY COMPAL ELECTRONICS, INC. NEITHER THIS SHEET NOR THE INFORMATION IT CONTAINS MAY BE USED BY OR DISCLOSED TO ANY THIRD PARTY WITHOUT PRIOR WRITTEN CONSENT OF COMPAL ELECTRONICS, INC.

Compal Electronics, Inc.

Title: *Cover Sheet*

Size: Custom | Document Number: *LA-8224P* | Rev: 0.2

Date: Thursday, October 27, 2011 | Sheet 1 of 59

Compal Confidential

QCL40

ZZZ1
PCB-MB
PCB P/N for Load BOM
DA80000QT00

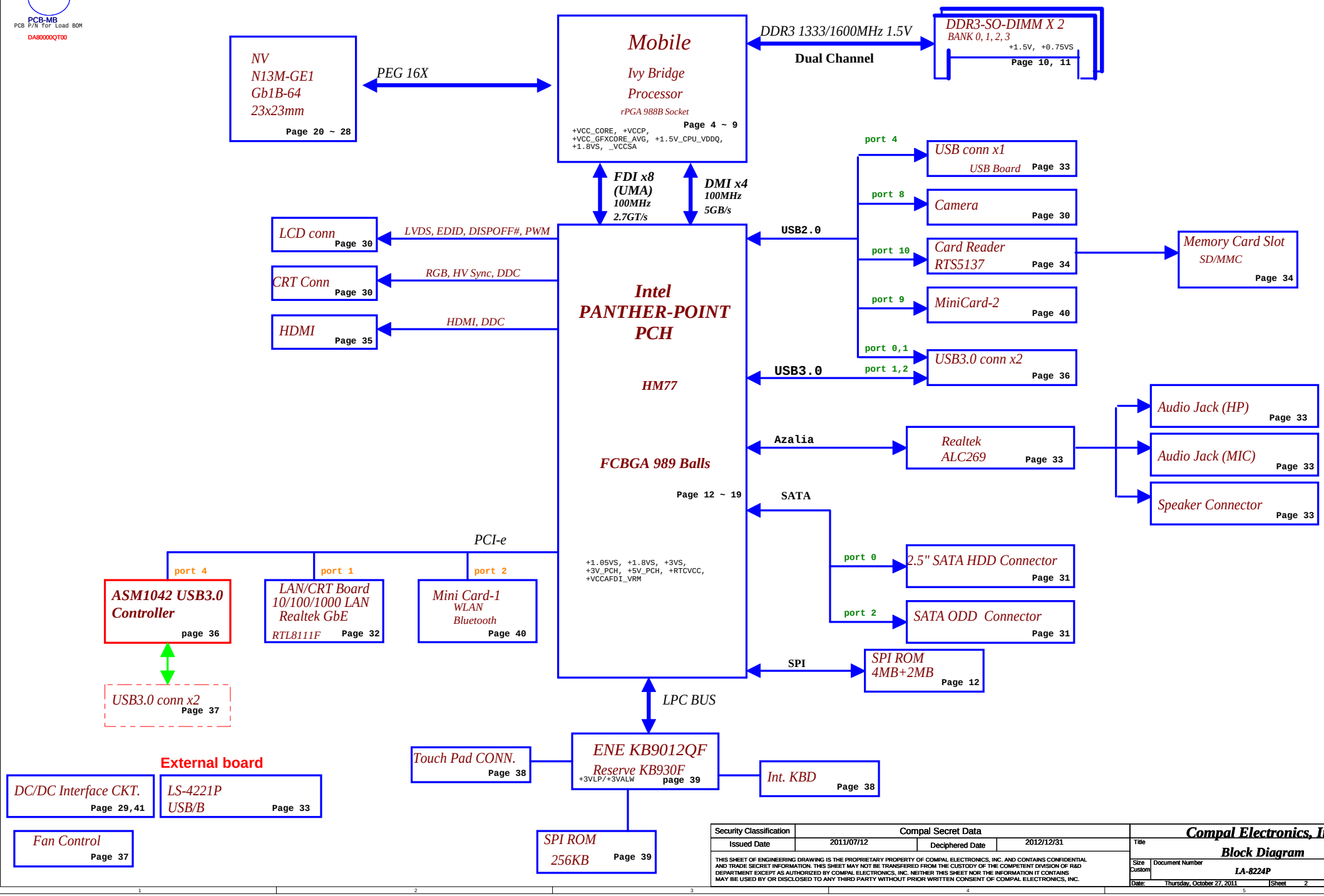

Security Classification	Compal Secret Data		
Issued Date	2011/07/12	Deciphered Date	2012/12/31

THIS SHEET OF ENGINEERING DRAWING IS THE PROPRIETARY PROPERTY OF COMPAL ELECTRONICS, INC. AND CONTAINS CONFIDENTIAL AND TRADE SECRET INFORMATION. THIS SHEET MAY NOT BE TRANSFERED FROM THE CUSTODY OF THE COMPETENT DIVISION OF R&D DEPARTMENT EXCEPT AS AUTHORIZED BY COMPAL ELECTRONICS, INC. NEITHER THIS SHEET NOR THE INFORMATION IT CONTAINS MAY BE USED BY OR DISCLOSED TO ANY THIRD PARTY WITHOUT PRIOR WRITTEN CONSENT OF COMPAL ELECTRONICS, INC.

Compal Electronics, Inc.

Title: **Block Diagram**

Size	Document Number	Rev
Custom	LA-8224P	0.2

Date: Thursday, October 27, 2011 | Sheet 2 of 59

X76@: VRAMX16X8 VRAMX16X4 VRAMX8X8

ER39

N13P-GS	N13P-GL	N13M-GE1	N13M-GE1 x8
ZZZ11 X76L11@ 2G HYN	ZZZ X76L01@ 2G SAM	ZZZ3 X76L03@ 1G SAM	ZZZ7 X76L07@ 2G HYN
ZZZ12 X76L12@ 2G SAM	ZZZ2 X76L02@ 2G HYN	ZZZ4 X76L04@ 1G HYN	ZZZ8 X76L08@ 2G ELP
	ZZZ5 X76L05@ 1G SAM		ZZZ9 X76L09@ 4G ELP
	ZZZ6 X76L06@ 1G HYN		ZZZ10 X76L10@ 4G HYN
N13P-GS GS@ U10 GS@ N13P-GS	**N13P-GL** GL@ U10 GL@ N13P-GL	**N13M-GE1** GE@ U10 GE@ N13M-GE1	**N13M-GE1 x8** GE8@ U10 GE8@ N13M-GE1 x8

DIS@: VGA componet
GE8@: N13M-GE1_GB1b

9012@: EC(ENE 9012 chip)
930@: EC(ENE 930 chip)
XDP@: Intel debug port

IU3@: USB3.0 by PCH
USB30@: USB3.0 controller IC

AI@: AI Charger
NAI@: Non AI Charger

SMBUS Control Table

	SOURCE	MINI1	BATT	PCH	EC	SODIMM	DGPU
EC_SMB_CK1 EC_SMB_DA1	KB930	X	V	X	X	X	X
EC_SMB_CK2 EC_SMB_DA2	KB930	X	X	V	X	X	V
PCH_SMBCLK PCH_SMBDATA	PCH	V	X	X	X	V	X
PCH_SMLCLK PCH_SMLDATA	PCH	X	X	X	V	X	V

CLKOUT	DESTINATION
PCI0	PCH_LOOPBACK
PCI1	EC
PCI2	None
PCI3	LPC Debug Port
PCI4	None

	USB3 PORT	DESTINATION
PCH	1	USB2.0+3.0
	2	USB2.0+3.0
	3	None
	4	None

	USB2 PORT	DESTINATION
PCH	0	USB2.0+3.0
	1	USB2.0+3.0
	2	None
	3	None
	4	JMINI1 (WLAN) Bluetooth
	5	None
	6	None
	7	None
	8	CAMERA
	9	USB2
	10	Card Reader
	11	None
	12	None
	13	None

Voltage Rails

Power Plane	Description	S1	S3	Deep S3	S5
VIN	Adapter power supply (19V)	N/A	N/A	N/A	N/A
BATT+	Battery power supply (12.6V)	N/A	N/A	N/A	N/A
B+	AC or battery power rail for power circuit	N/A	N/A	N/A	N/A
+3VLP	3.3V power rail for 51ON power management	ON	ON	ON	ON
+3VALW	3.3V always on power rail	ON	ON	ON	AC/ON; DC/OFF
+LAN_IO	3.3V power rail for ethernet	ON	ON	OFF	OFF
+3VS_WLAN	3.3V power rail for WLAN/BT Combo	ON	OFF	OFF	OFF
+3V_PCH	3.3V power rail for PCH suspend well plane	ON	ON	OFF	OFF
+3VS	3.3V power rail for DDR SPI,PCH,HDD,Audio,Card Reader	ON	OFF	OFF	OFF
+3VSG	3.3V power rail for VGA	ON	OFF	OFF	OFF
+LCDVDD	3.3V power rail for LCD	ON	OFF	OFF	OFF
+5VALW	5V always on power rail	ON	ON	ON	AC/ON; DC/OFF
+5V_PCH	5V power rail for PCH suspend well plane	ON	ON	OFF	OFF
+5VS	5V power rail for HDD,AUDIO,FAN,Touch PAD	ON	OFF	OFF	OFF
+5VS_ODD	5V power rail for SATA ODD	ON	OFF	OFF	OFF
+1.8VS	1.8V power rail for CPU,PCH	ON	OFF	OFF	OFF
+1.05VS	1.05V power rail for PCH	ON	OFF	OFF	OFF
+VCCP	1.05V power rail for CPU VCCIO,PCH	ON	OFF	OFF	OFF
+1.05VSG	1.05V power rail for N13P	ON	OFF	OFF	OFF
+1.5V	1.5V power rail for DDR3 system memory	ON	ON	ON	OFF
+1.5V_CPU_VDDQ	1.5V power rail CPU VDDQ	ON	OFF	OFF	OFF
+1.5VSG	1.5V power rail for N13P,VRAM	ON	OFF	OFF	OFF
+1.5VS	1.5V power rail for PCH,WLAN/BT combo	ON	OFF	OFF	OFF
+0.75VS	0.75V power rail for DDR VREF	ON	OFF	OFF	OFF
+VCCSA	VCCSA for CPU system agent	ON	OFF	OFF	OFF
+VCC_CORE	CORE Voltage for CPU	ON	OFF	OFF	OFF
+VCC_GFXCORE_AXG	1.5V power rail for N13P,VRAM	ON	OFF	OFF	OFF
+VGA_CORE	CORE Voltage for N13P Graphics ON OFF OFF	ON	OFF	OFF	OFF

SATA	DESTINATION
SATA0	HDD
SATA1	None
SATA2	ODD
SATA3	None
SATA4	None
SATA5	None

PCI EXPRESS	DESTINATION
Lane 1	10/100/1G LAN
Lane 2	MINI CARD WLAN
Lane 3	None
Lane 4	USB3.0 controller
Lane 5	None
Lane 6	None
Lane 7	None
Lane 8	None

	DIFFERENTIAL	DESTINATION	FLEX CLOCKS	DESTINATION
CLK	CLKOUT_PCIE0	10/100/1G LAN	CLKOUTFLEX0	CLK_SD_48M
	CLKOUT_PCIE1	MINI CARD WLAN	CLKOUTFLEX1	None
	CLKOUT_PCIE2	None	CLKOUTFLEX2	None
	CLKOUT_PCIE3	USB3.0 controller	CLKOUTFLEX3	None
	CLKOUT_PCIE4	None		
	CLKOUT_PCIE5	None		
	CLKOUT_PCIE6	None		
	CLKOUT_PCIE7	None		
	CLKOUT_PEG_B	None		

Symbol Note :

: means Digital Ground

: means Analog Ground

THIS SHEET OF ENGINEERING DRAWING IS THE PROPRIETARY PROPERTY OF COMPAL ELECTRONICS, INC. AND CONTAINS CONFIDENTIAL AND TRADE SECRET INFORMATION. THIS SHEET MAY NOT BE TRANSFERED FROM THE CUSTODY OF THE COMPETENT DIVISION OF R&D DEPARTMENT EXCEPT AS AUTHORIZED BY COMPAL ELECTRONICS, INC. NEITHER THIS SHEET NOR THE INFORMATION IT CONTAINS MAY BE USED BY OR DISCLOSED TO ANY THIRD PARTY WITHOUT PRIOR WRITTEN CONSENT OF COMPAL ELECTRONICS, INC.

Security Classification	Compal Secret Data		
Issued Date	2011/07/12	Deciphered Date	2012/12/31

Compal Electronics, Inc.

Title: Notes List

Size: C | Document Number: LA-8224P | Rev: 0.2

Date: Thursday, October 27, 2011 | Sheet 3 of 59

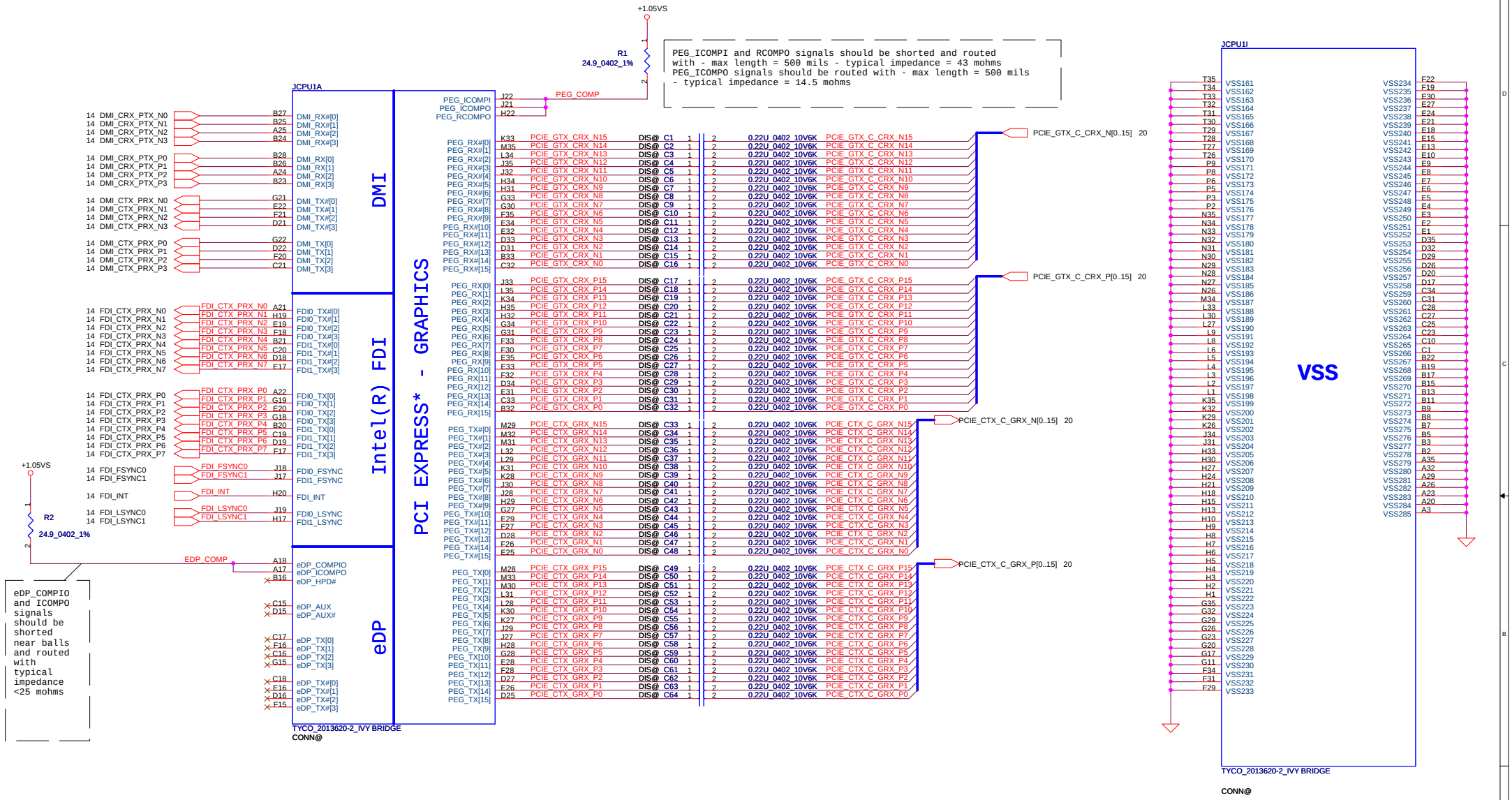

Security Classification	Compal Secret Data		
Issued Date	2011/07/12	Deciphered Date	2012/12/31

THIS SHEET OF ENGINEERING DRAWING IS THE PROPRIETARY PROPERTY OF COMPAL ELECTRONICS, INC. AND CONTAINS CONFIDENTIAL AND TRADE SECRET INFORMATION. THIS SHEET MAY NOT BE TRANSFERED FROM THE CUSTODY OF THE COMPETENT DIVISION OF R&D DEPARTMENT EXCEPT AS AUTHORIZED BY COMPAL ELECTRONICS, INC. NEITHER THIS SHEET NOR THE INFORMATION IT CONTAINS MAY BE USED BY OR DISCLOSED TO ANY THIRD PARTY WITHOUT PRIOR WRITTEN CONSENT OF COMPAL ELECTRONICS, INC.

Compal Electronics, Inc.

Title: PROCESSOR(1/6) DMI,FDI,PEG

Size: Custom | Document Number: LA-8224P | Rev: 0.2

Date: Thursday, October 27, 2011 | Sheet 4 of 59

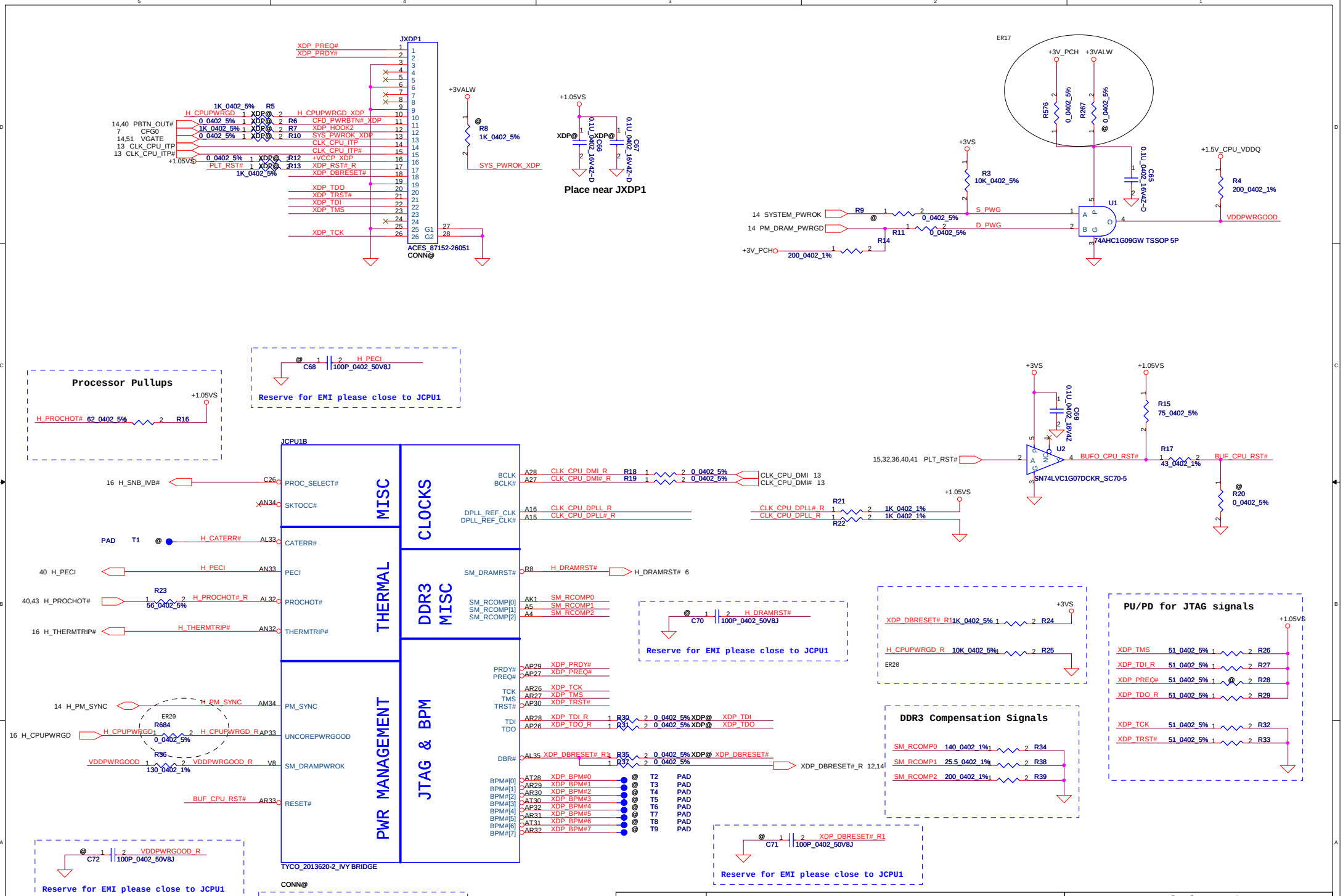

Security Classification	Compal Secret Data		
Issued Date	2011/07/12	Deciphered Date	2012/12/31

THIS SHEET OF ENGINEERING DRAWING IS THE PROPRIETARY PROPERTY OF COMPAL ELECTRONICS, INC. AND CONTAINS CONFIDENTIAL AND TRADE SECRET INFORMATION. THIS SHEET MAY NOT BE TRANSFERRED FROM THE CUSTODY OF THE COMPETENT DIVISION OF R&D DEPARTMENT EXCEPT AS AUTHORIZED BY COMPAL ELECTRONICS, INC. NEITHER THIS SHEET NOR THE INFORMATION IT CONTAINS MAY BE USED BY OR DISCLOSED TO ANY THIRD PARTY WITHOUT PRIOR WRITTEN CONSENT OF COMPAL ELECTRONICS, INC.

Compal Electronics, Inc.

Title: PROCESSOR(2/6) PM,XDP,CLK

Size: Custom | Document Number: LA-8224P | Rev: 0.2

Date: Thursday, October 27, 2011 | Sheet 5 of 59

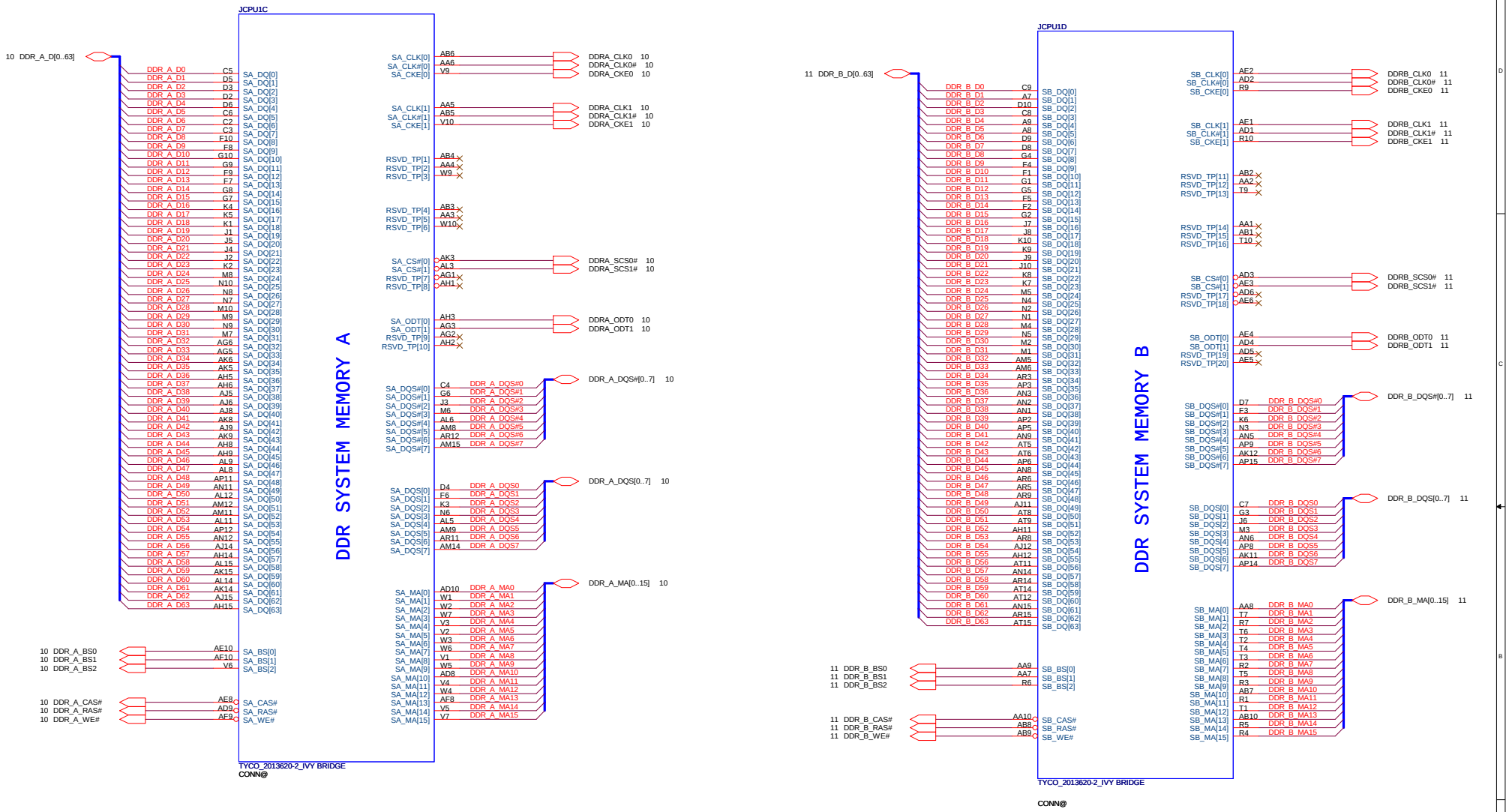

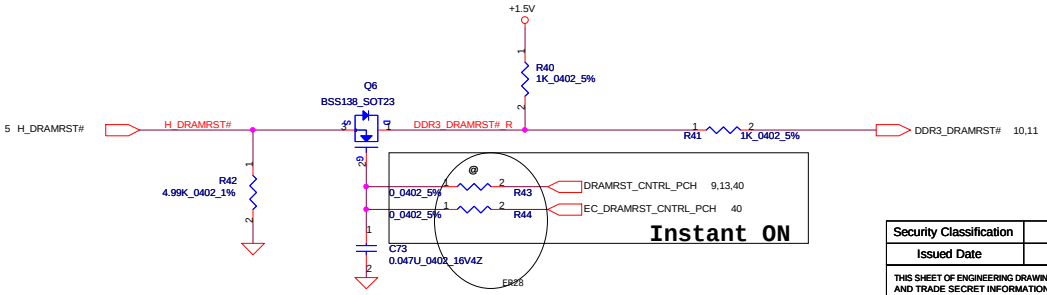

Security Classification	Compal Secret Data		
Issued Date	2011/07/12	Deciphered Date	2012/12/31

THIS SHEET OF ENGINEERING DRAWING IS THE PROPRIETARY PROPERTY OF COMPAL ELECTRONICS, INC. AND CONTAINS CONFIDENTIAL AND TRADE SECRET INFORMATION. THIS SHEET MAY NOT BE TRANSFERED FROM THE CUSTODY OF THE COMPETENT DIVISION OF R&D DEPARTMENT EXCEPT AS AUTHORIZED BY COMPAL ELECTRONICS, INC. NEITHER THIS SHEET NOR THE INFORMATION IT CONTAINS MAY BE USED BY OR DISCLOSED TO ANY THIRD PARTY WITHOUT PRIOR WRITTEN CONSENT OF COMPAL ELECTRONICS, INC.

Compal Electronics, Inc.

Title: **PROCESSOR(3/6) DDRIII**

Size: Custom | Document Number: **LA-8224P** | Rev: 0.2

Date: Thursday, October 27, 2011 | Sheet 6 of 59

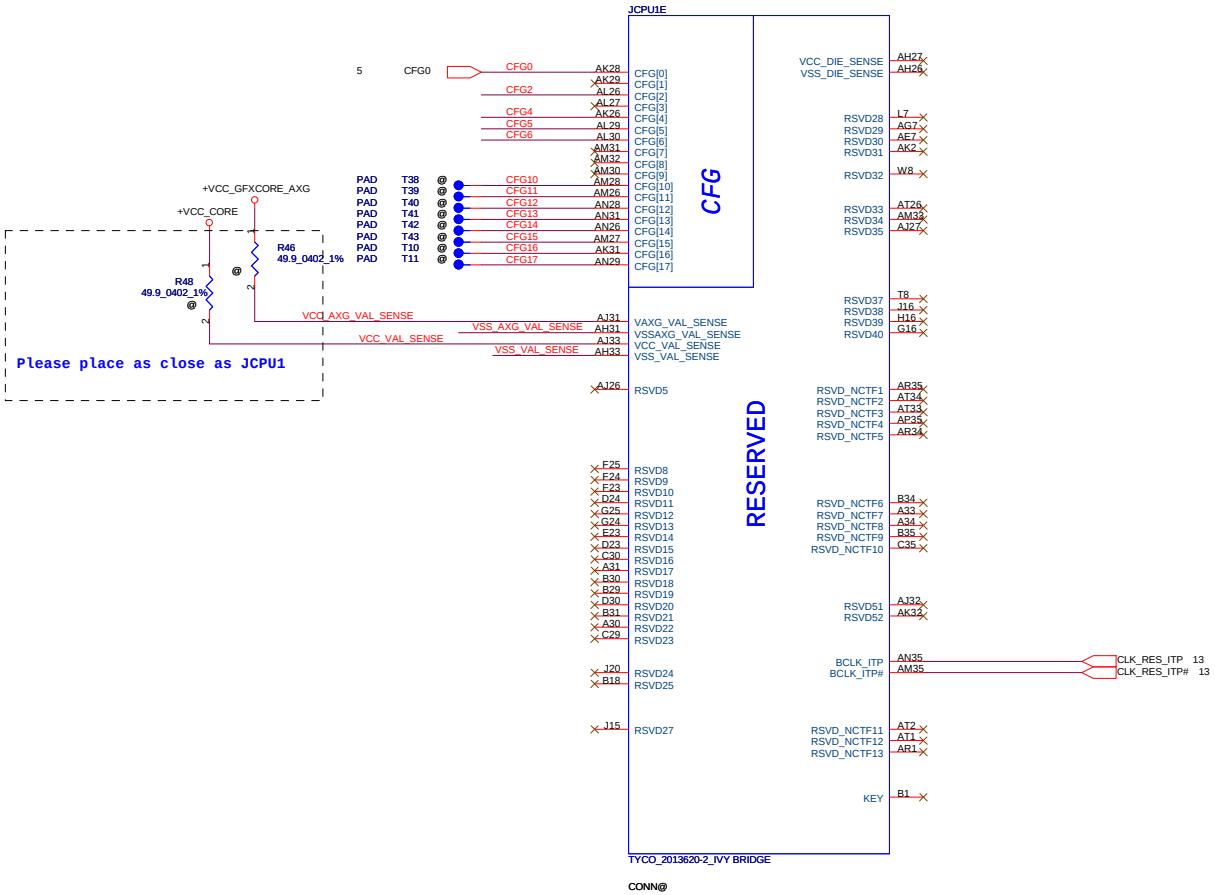

CFG Straps for Processor

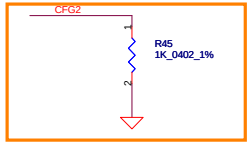

PEG Static Lane Reversal - CFG2 is for the 16x	
CFG2	1:(Default) Normal Operation; Lane # definition matches socket pin map definition 0:Lane Reversed

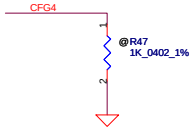

Display Port Presence Strap	
CFG4	1 : Disabled; No Physical Display Port attached to Embedded Display Port 0 : Enabled; An external Display Port device is connected to the Embedded Display Port

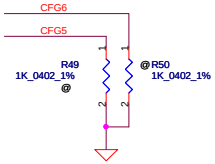

PCIE Port Bifurcation Straps	
CFG[6:5]	11: (Default) x16 - Device 1 functions 1 and 2 disabled 10: x8, x8 - Device 1 function 1 enabled ; function 2 disabled 01: Reserved - (Device 1 function 1 disabled ; function 2 enabled) 00: x8,x4,x4 - Device 1 functions 1 and 2 enabled

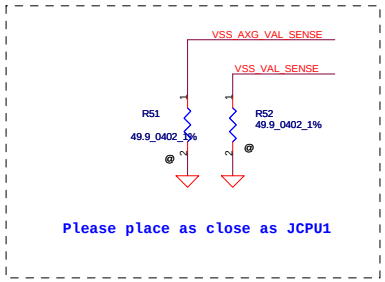

THIS SHEET OF ENGINEERING DRAWING IS THE PROPRIETARY PROPERTY OF COMPAL ELECTRONICS, INC. AND CONTAINS CONFIDENTIAL AND TRADE SECRET INFORMATION. THIS SHEET MAY NOT BE TRANSFERED FROM THE CUSTODY OF THE COMPETENT DIVISION OF R&D DEPARTMENT EXCEPT AS AUTHORIZED BY COMPAL ELECTRONICS, INC. NEITHER THIS SHEET NOR THE INFORMATION IT CONTAINS MAY BE USED BY OR DISCLOSED TO ANY THIRD PARTY WITHOUT PRIOR WRITTEN CONSENT OF COMPAL ELECTRONICS, INC.

Security Classification	Compal Secret Data		
Issued Date	2011/07/12	Deciphered Date	2012/12/31

Compal Electronics, Inc.

Title: PROCESSOR(4/6) RSVD,CFG

Size: Custom | Document Number: LA-8224P | Rev: 0.2

Date: Thursday, October 27, 2011 | Sheet 7 of 59

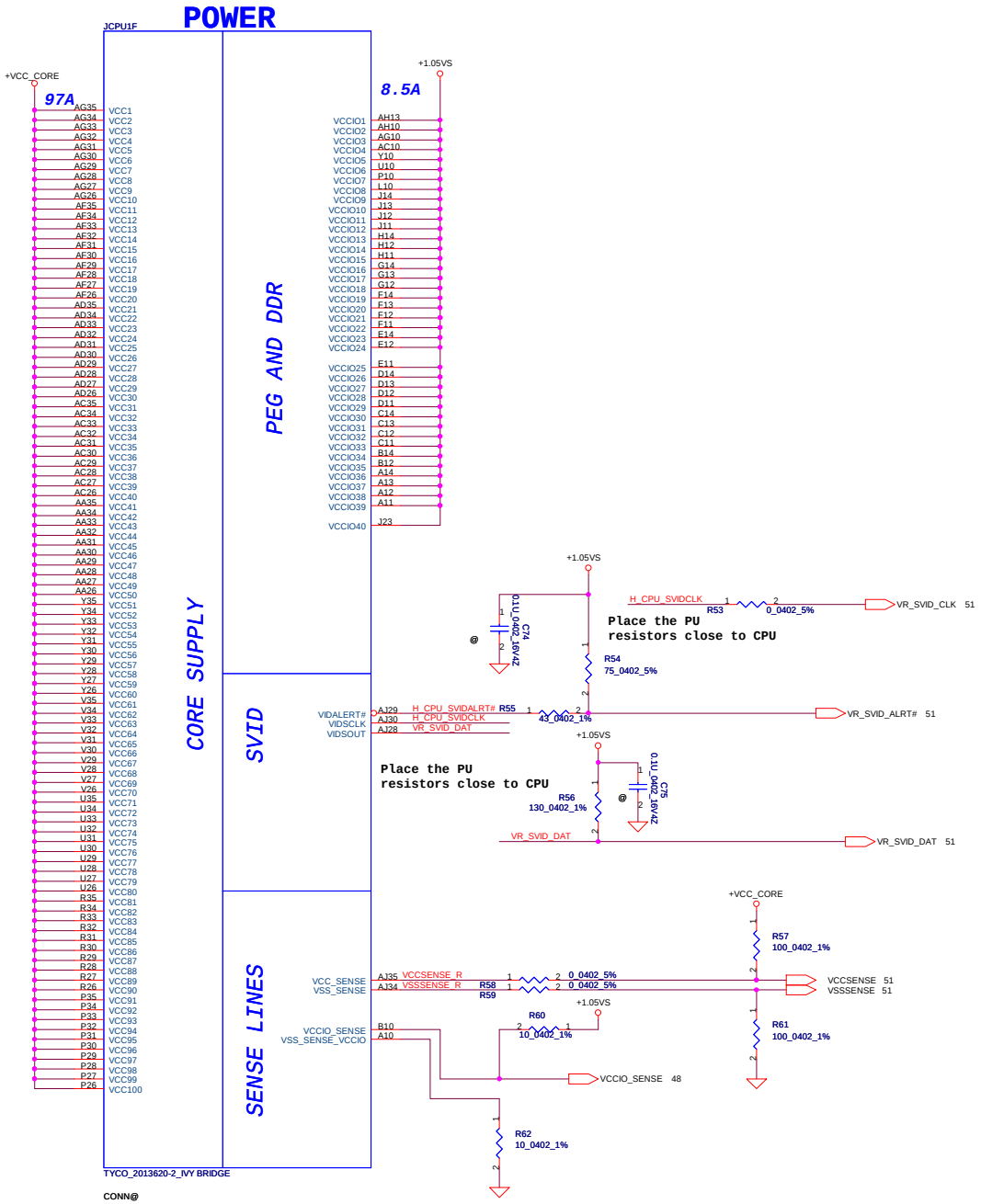

Security Classification	Compal Secret Data		
Issued Date	2011/07/12	Deciphered Date	2012/12/31

THIS SHEET OF ENGINEERING DRAWING IS THE PROPRIETARY PROPERTY OF COMPAL ELECTRONICS, INC. AND CONTAINS CONFIDENTIAL AND TRADE SECRET INFORMATION. THIS SHEET MAY NOT BE TRANSFERED FROM THE CUSTODY OF THE COMPETENT DIVISION OF R&D DEPARTMENT EXCEPT AS AUTHORIZED BY COMPAL ELECTRONICS, INC. NEITHER THIS SHEET NOR THE INFORMATION IT CONTAINS MAY BE USED BY OR DISCLOSED TO ANY THIRD PARTY WITHOUT PRIOR WRITTEN CONSENT OF COMPAL ELECTRONICS, INC.

Compal Electronics, Inc.

Title: PROCESSOR(5/6) PWR,BYPASS

Size: Custom | Document Number: LA-8224P | Rev: 0.2

Date: Thursday, October 27, 2011 | Sheet 8 of 59

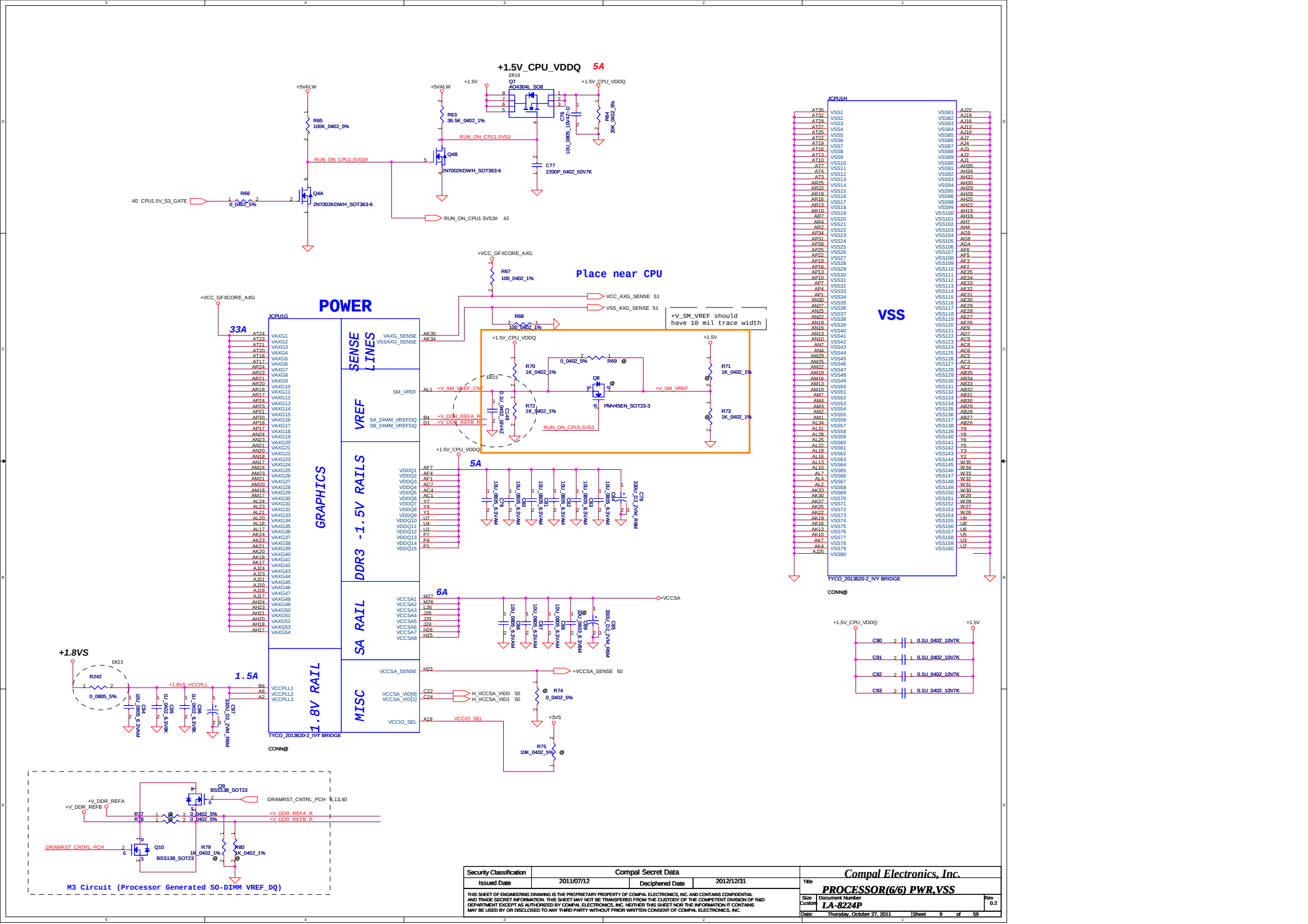

Security Classification	Compal Secret Data		
Issued Date	2011/07/12	Deciphered Date	2012/12/31

THIS SHEET OF ENGINEERING DRAWING IS THE PROPRIETARY PROPERTY OF COMPAL ELECTRONICS, INC. AND CONTAINS CONFIDENTIAL AND TRADE SECRET INFORMATION. THIS SHEET MAY NOT BE TRANSFERRED FROM THE CUSTODY OF THE COMPETENT DIVISION OF R&D DEPARTMENT EXCEPT AS AUTHORIZED BY COMPAL ELECTRONICS, INC. NEITHER THIS SHEET NOR THE INFORMATION IT CONTAINS MAY BE USED BY OR DISCLOSED TO ANY THIRD PARTY WITHOUT PRIOR WRITTEN CONSENT OF COMPAL ELECTRONICS, INC.

Compal Electronics, Inc.

Title: PROCESSOR(6/6) PWR,VSS

Size: Custom | Document Number: LA-8224P | Rev: 0.2

Date: Thursday, October 27, 2011 | Sheet 9 of 59

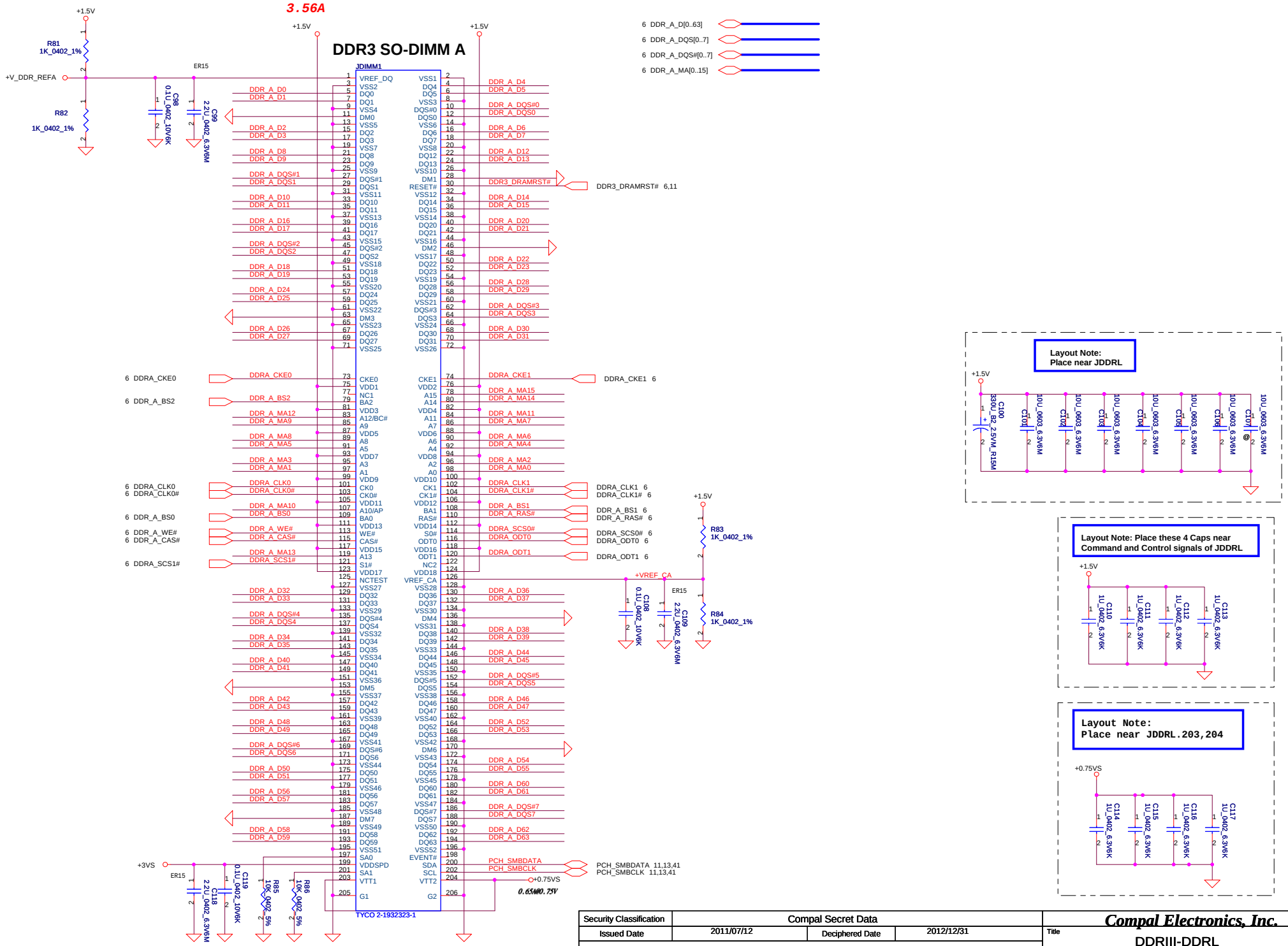

Security Classification	Compal Secret Data		
Issued Date	2011/07/12	Deciphered Date	2012/12/31

THIS SHEET OF ENGINEERING DRAWING IS THE PROPRIETARY PROPERTY OF COMPAL ELECTRONICS, INC. AND CONTAINS CONFIDENTIAL AND TRADE SECRET INFORMATION. THIS SHEET MAY NOT BE TRANSFERED FROM THE CUSTODY OF THE COMPETENT DIVISION OF R&D DEPARTMENT EXCEPT AS AUTHORIZED BY COMPAL ELECTRONICS, INC. NEITHER THIS SHEET NOR THE INFORMATION IT CONTAINS MAY BE USED BY OR DISCLOSED TO ANY THIRD PARTY WITHOUT PRIOR WRITTEN CONSENT OF COMPAL ELECTRONICS, INC.

Compal Electronics, Inc.

Title: DDRIII-DDRL

Size: Custom | Document Number: LA-8224P | Rev: 0.2

Date: Thursday, October 27, 2011 | Sheet 10 of 59

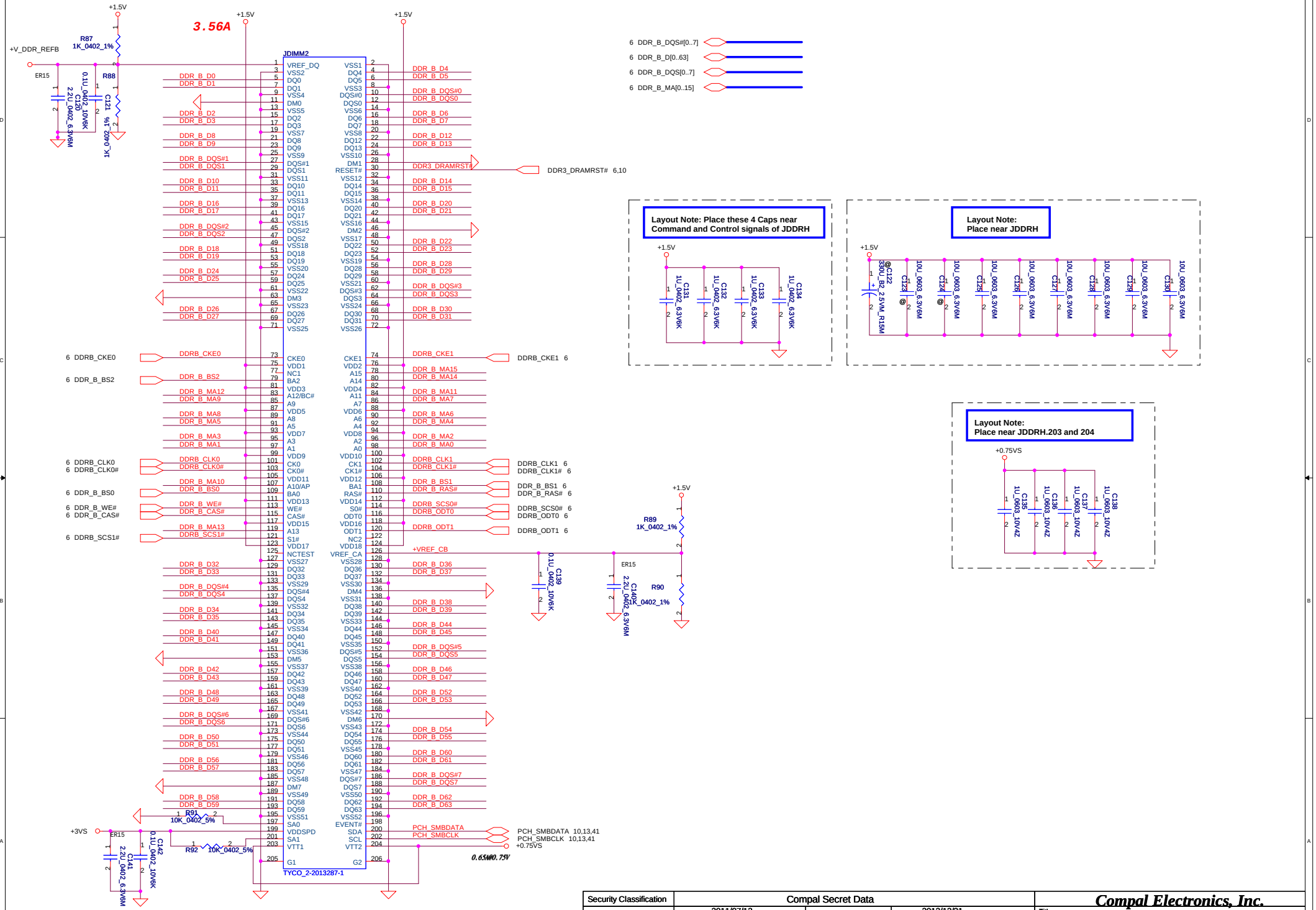

Security Classification	Compal Secret Data		
Issued Date	2011/07/12	Deciphered Date	2012/12/31

THIS SHEET OF ENGINEERING DRAWING IS THE PROPRIETARY PROPERTY OF COMPAL ELECTRONICS, INC. AND CONTAINS CONFIDENTIAL AND TRADE SECRET INFORMATION. THIS SHEET MAY NOT BE TRANSFERED FROM THE CUSTODY OF THE COMPETENT DIVISION OF R&D DEPARTMENT EXCEPT AS AUTHORIZED BY COMPAL ELECTRONICS, INC. NEITHER THIS SHEET NOR THE INFORMATION IT CONTAINS MAY BE USED BY OR DISCLOSED TO ANY THIRD PARTY WITHOUT PRIOR WRITTEN CONSENT OF COMPAL ELECTRONICS, INC.

Compal Electronics, Inc.

Title: DDRIII-DDRH

Size | Document Number: LA-8224P | Rev: 0.2

Date: Thursday, October 27, 2011 | Sheet 11 of 59

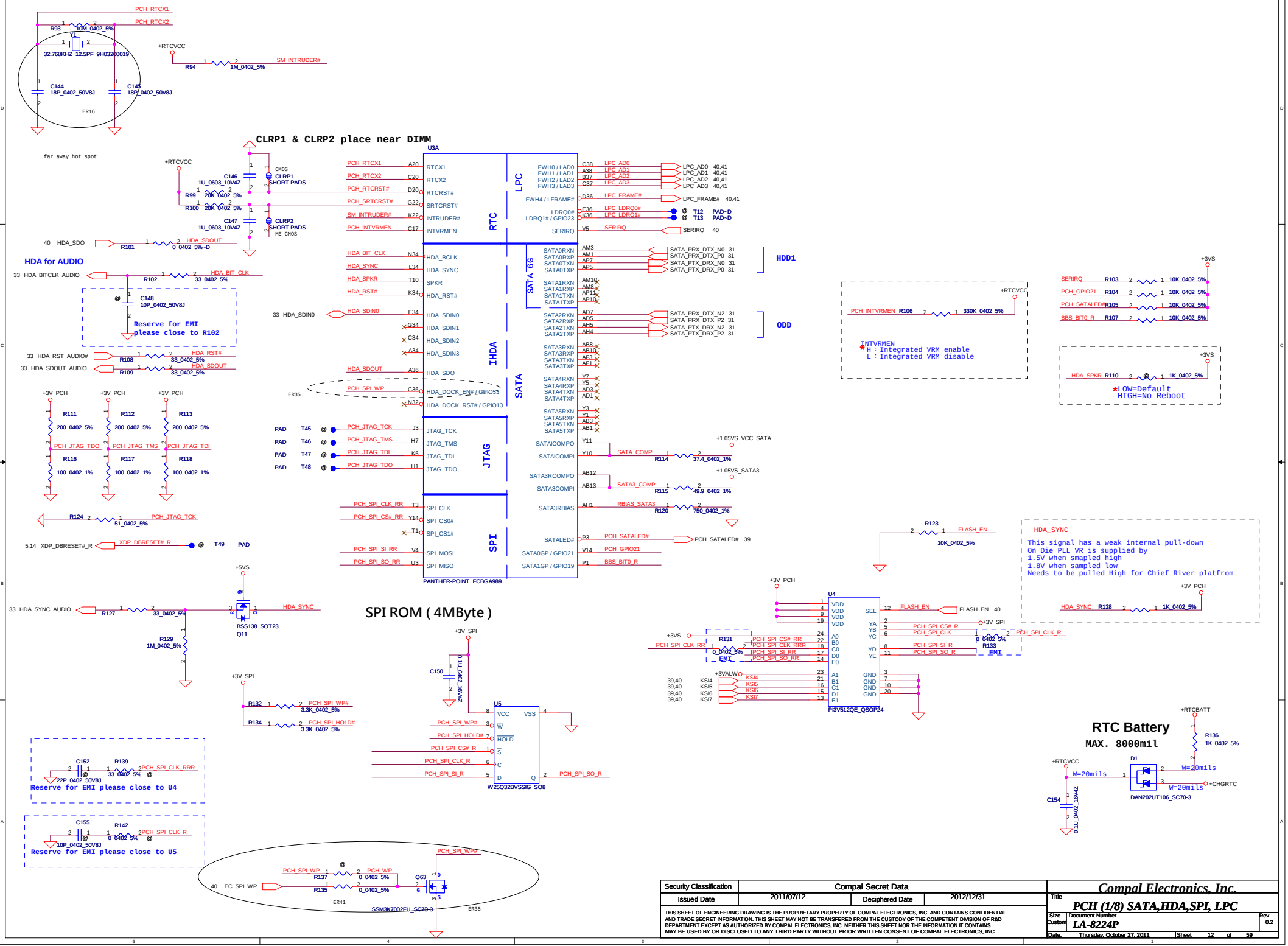
CLRP1 & CLRP2 place near DIMM
U3A
RTC
LPC
IHDA
SATA 6G
SATA
JTAG
SPI
PANTHER-POINT_FCBGA989
HDA for AUDIO
Reserve for EMI please close to R102
HDD1
ODD
INTVRMEN
H : Integrated VRM enable
L : Integrated VRM disable
*LOW=Default
HIGH=No Reboot
HDA_SYNC
This signal has a weak internal pull-down
On Die PLL VR is supplied by
1.5V when smapled high
1.8V when sampled low
Needs to be pulled High for Chief River platfrom
SPI ROM (4MByte)
U4
PI3V512QE_QSOP24
U5
W25Q32BVSSIG_SO8
Q11
BSS138_SOT23
Q63
SSM3K7002FU_SC70-3
D1
DAN202UT106_SC70-3
RTC Battery
MAX. 8000mil
Reserve for EMI please close to U4
Reserve for EMI please close to U5
Security Classification
Compal Secret Data
Issued Date
2011/07/12
Deciphered Date
2012/12/31
THIS SHEET OF ENGINEERING DRAWING IS THE PROPRIETARY PROPERTY OF COMPAL ELECTRONICS, INC. AND CONTAINS CONFIDENTIAL AND TRADE SECRET INFORMATION. THIS SHEET MAY NOT BE TRANSFERED FROM THE CUSTODY OF THE COMPETENT DIVISION OF R&D DEPARTMENT EXCEPT AS AUTHORIZED BY COMPAL ELECTRONICS, INC. NEITHER THIS SHEET NOR THE INFORMATION IT CONTAINS MAY BE USED BY OR DISCLOSED TO ANY THIRD PARTY WITHOUT PRIOR WRITTEN CONSENT OF COMPAL ELECTRONICS, INC.
Compal Electronics, Inc.
Title
PCH (1/8) SATA,HDA,SPI, LPC
Size
Custom
Document Number
LA-8224P
Rev
0.2
Date:
Thursday, October 27, 2011
Sheet
12
of
59

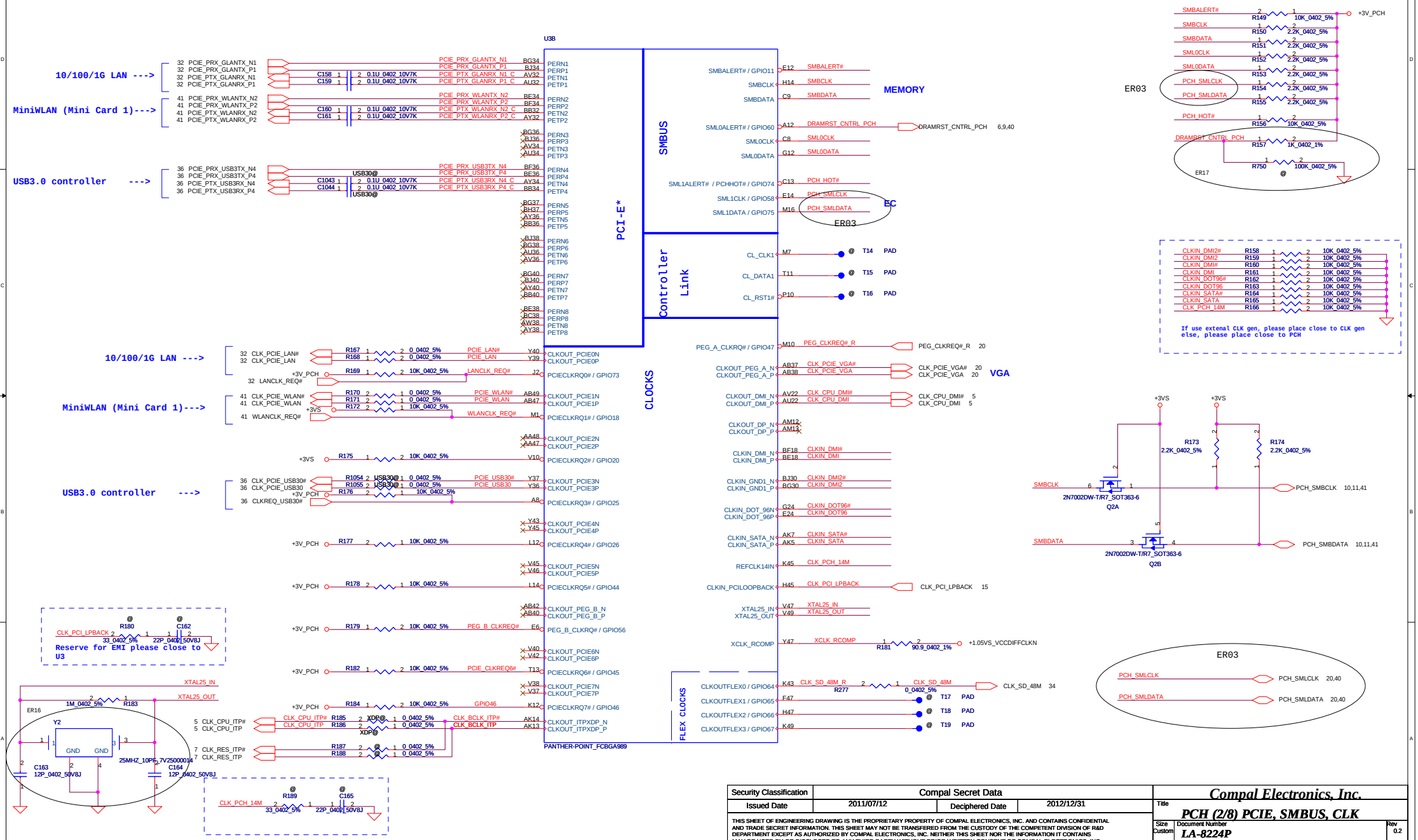

Security Classification	Compal Secret Data		
Issued Date	2011/07/12	Deciphered Date	2012/12/31

THIS SHEET OF ENGINEERING DRAWING IS THE PROPRIETARY PROPERTY OF COMPAL ELECTRONICS, INC. AND CONTAINS CONFIDENTIAL AND TRADE SECRET INFORMATION. THIS SHEET MAY NOT BE TRANSFERED FROM THE CUSTODY OF THE COMPETENT DIVISION OF R&D DEPARTMENT EXCEPT AS AUTHORIZED BY COMPAL ELECTRONICS, INC. NEITHER THIS SHEET NOR THE INFORMATION IT CONTAINS MAY BE USED BY OR DISCLOSED TO ANY THIRD PARTY WITHOUT PRIOR WRITTEN CONSENT OF COMPAL ELECTRONICS, INC.

Compal Electronics, Inc.

Title: **PCH (2/8) PCIE, SMBUS, CLK**

Size: Custom | Document Number: **LA-8224P** | Rev: 0.2

Date: Thursday, October 27, 2011 | Sheet 13 of 59

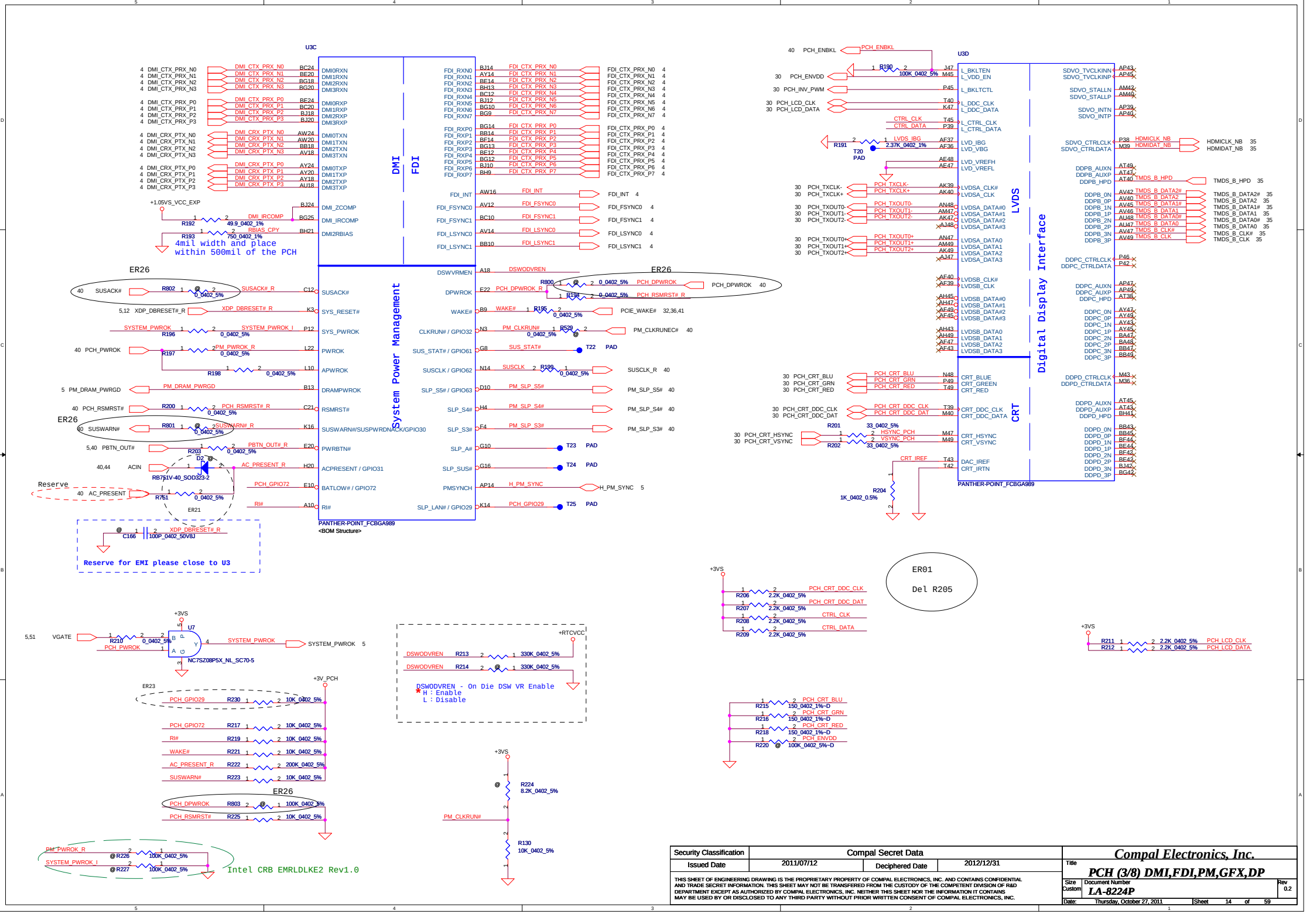
U3C
DMI
FDI
System Power Management
PANTHER-POINT_FCBGA989
<BOM Structure>
U3D
LVDS
Digital Display Interface
CRT
PANTHER-POINT_FCBGA989
4mil width and place
within 500mil of the PCH
Reserve for EMI please close to U3
ER01
Del R205
DSWODVREN - On Die DSW VR Enable
* H : Enable
L : Disable
Intel CRB EMRLDLKE2 Rev1.0
Compal Electronics, Inc.
PCH (3/8) DMI,FDI,PM,GFX,DP
LA-8224P
Compal Secret Data
2011/07/12
2012/12/31
Thursday, October 27, 2011
Sheet 14 of 59

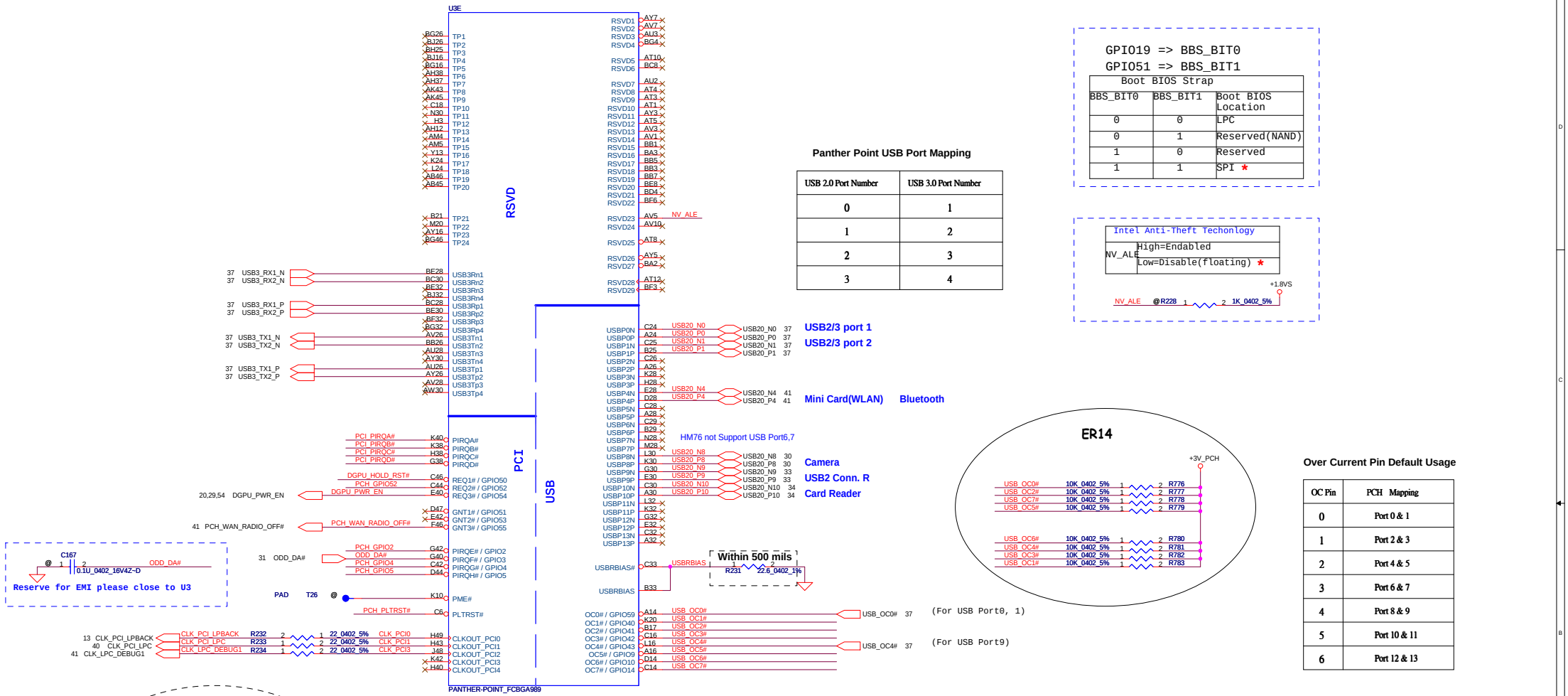

GPIO19 => BBS_BIT0
GPIO51 => BBS_BIT1

Boot BIOS Strap

BBS_BIT0	BBS_BIT1	Boot BIOS Location
0	0	LPC
0	1	Reserved(NAND)
1	0	Reserved
1	1	SPI *

Intel Anti-Theft Techonlogy

NV_ALE	High=Endabled
	Low=Disable(floating) *

NV_ALE @R228 1K_0402_5% +1.8VS

Panther Point USB Port Mapping

USB 2.0 Port Number	USB 3.0 Port Number
0	1
1	2
2	3
3	4

Over Current Pin Default Usage

OC Pin	PCH Mapping
0	Port 0 & 1
1	Port 2 & 3
2	Port 4 & 5
3	Port 6 & 7
4	Port 8 & 9
5	Port 10 & 11
6	Port 12 & 13

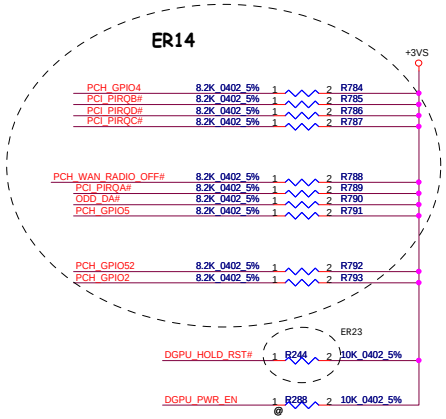

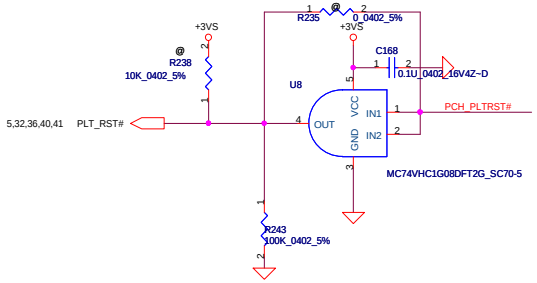

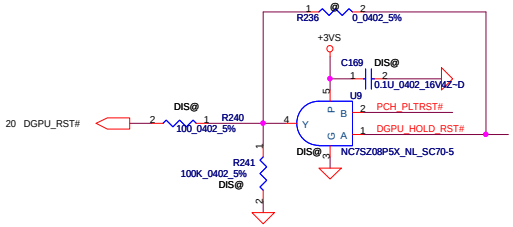

Security Classification	Compal Secret Data		
Issued Date	2011/07/12	Deciphered Date	2012/12/31

THIS SHEET OF ENGINEERING DRAWING IS THE PROPRIETARY PROPERTY OF COMPAL ELECTRONICS, INC. AND CONTAINS CONFIDENTIAL AND TRADE SECRET INFORMATION. THIS SHEET MAY NOT BE TRANSFERED FROM THE CUSTODY OF THE COMPETENT DIVISION OF R&D DEPARTMENT EXCEPT AS AUTHORIZED BY COMPAL ELECTRONICS, INC. NEITHER THIS SHEET NOR THE INFORMATION IT CONTAINS MAY BE USED BY OR DISCLOSED TO ANY THIRD PARTY WITHOUT PRIOR WRITTEN CONSENT OF COMPAL ELECTRONICS, INC.

Compal Electronics, Inc.

Title: PCH (4/8) PCI, USB, NVRAM

Size: Custom | Document Number: LA-8224P | Rev: 0.2

Date: Thursday, October 27, 2011 | Sheet 15 of 59

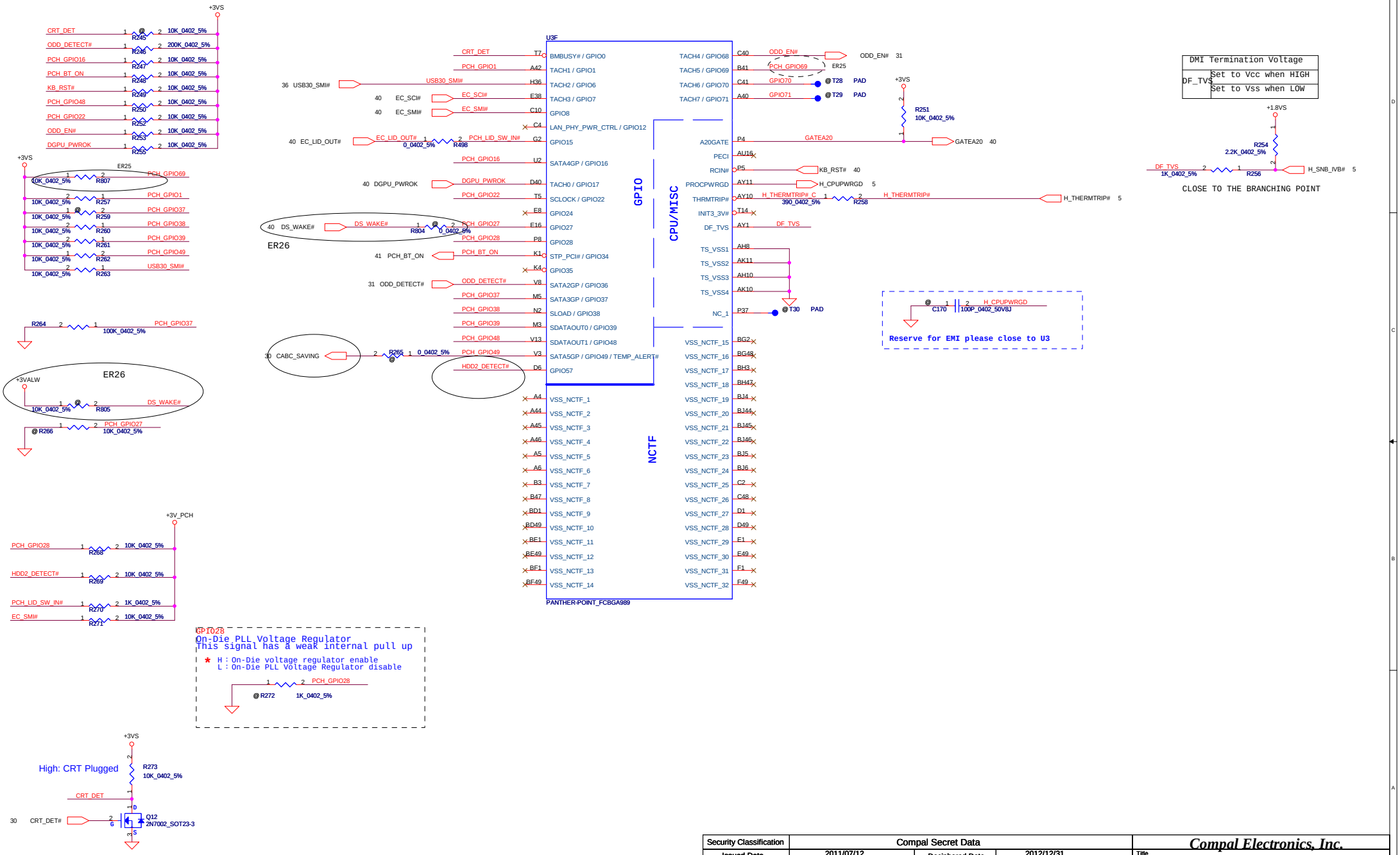

Security Classification	Compal Secret Data		
Issued Date	2011/07/12	Deciphered Date	2012/12/31

THIS SHEET OF ENGINEERING DRAWING IS THE PROPRIETARY PROPERTY OF COMPAL ELECTRONICS, INC. AND CONTAINS CONFIDENTIAL AND TRADE SECRET INFORMATION. THIS SHEET MAY NOT BE TRANSFERED FROM THE CUSTODY OF THE COMPETENT DIVISION OF R&D DEPARTMENT EXCEPT AS AUTHORIZED BY COMPAL ELECTRONICS, INC. NEITHER THIS SHEET NOR THE INFORMATION IT CONTAINS MAY BE USED BY OR DISCLOSED TO ANY THIRD PARTY WITHOUT PRIOR WRITTEN CONSENT OF COMPAL ELECTRONICS, INC.

Compal Electronics, Inc.

Title: **PCH (5/8) GPIO, CPU, MISC**

Size: Custom | Document Number: LA-8224P | Rev: 0.2

Date: Thursday, October 27, 2011 | Sheet 16 of 59

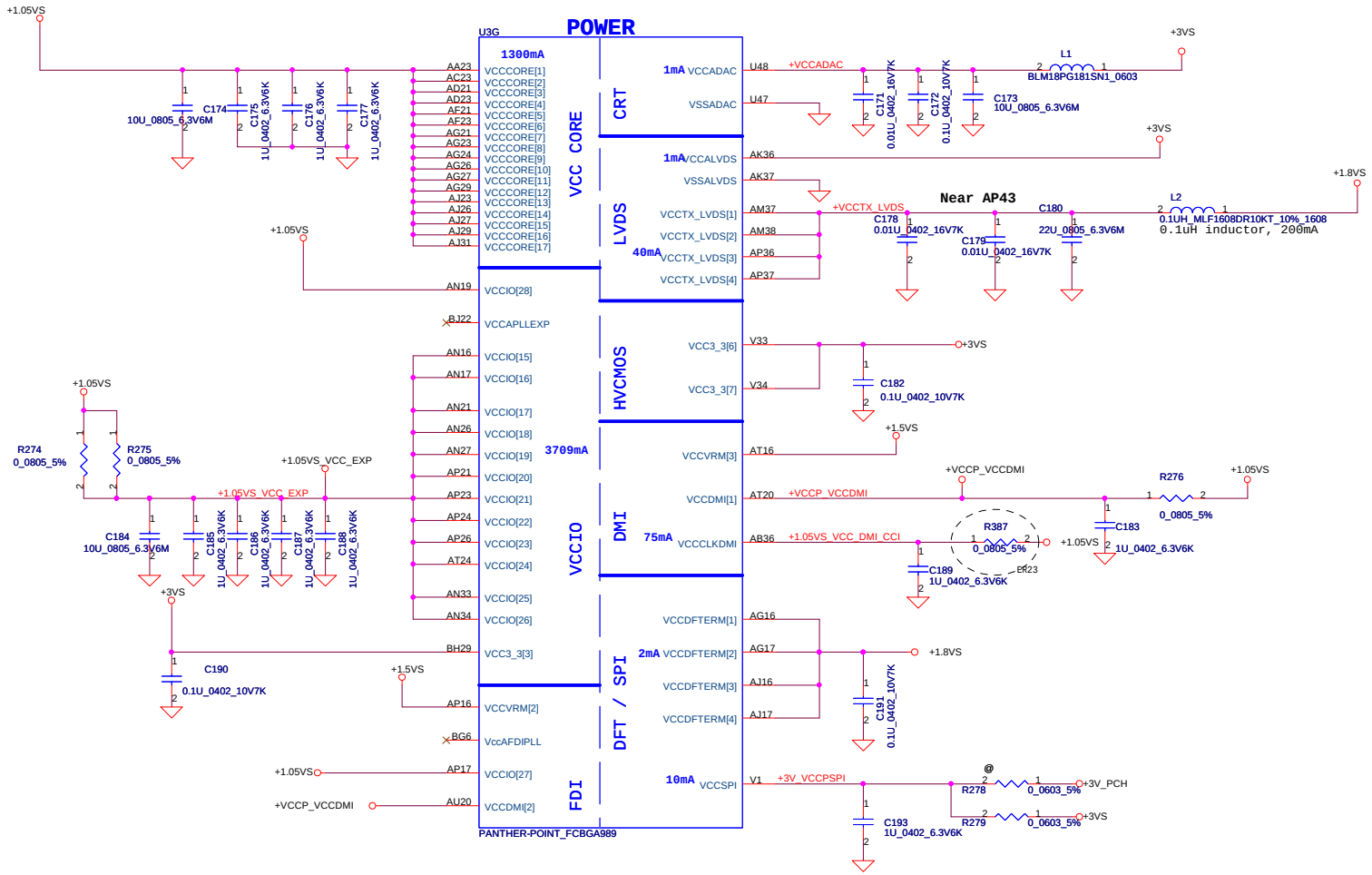

PCH Power Rail Table
Refer to CPU EDS R1.5

Voltage Rail	Voltage	S0 Iccmax Current (A)
V_PROC_IO	1.05	0.001
V5REF	5	0.001
V5REF_Sus	5	0.001
Vcc3_3	3.3	0.228
VccADAC	3.3	0.001
VccADPLLA	1.05	0.075
VccADPLLB	1.05	0.075
VccCore	1.05	1.3
VccDMI	1.05	0.042
VccIO	1.05	3.709
VccASW	1.05	0.903
VccSPI	3.3	0.01
VccDSW	3.3	0.001
VccDFTERM	1.8	0.002
VccRTC	3.3	6 uA
VccSus3_3	3.3	0.065
VccSusHDA	3.3 / 1.5	0.01
VccVRM	1.8 / 1.5	0.167
VccCLKDMI	1.05	0.075
VccSSC	1.05	0.095
VccDIFFCLKN	1.05	0.055
VccALVDS	3.3	0.001
VccTX_LVDS	1.8	0.04

Security Classification	Compal Secret Data		
Issued Date	2011/07/12	Deciphered Date	2012/12/31

THIS SHEET OF ENGINEERING DRAWING IS THE PROPRIETARY PROPERTY OF COMPAL ELECTRONICS, INC. AND CONTAINS CONFIDENTIAL AND TRADE SECRET INFORMATION. THIS SHEET MAY NOT BE TRANSFERED FROM THE CUSTODY OF THE COMPETENT DIVISION OF R&D DEPARTMENT EXCEPT AS AUTHORIZED BY COMPAL ELECTRONICS, INC. NEITHER THIS SHEET NOR THE INFORMATION IT CONTAINS MAY BE USED BY OR DISCLOSED TO ANY THIRD PARTY WITHOUT PRIOR WRITTEN CONSENT OF COMPAL ELECTRONICS, INC.

Compal Electronics, Inc.

Title: PCH (6/8) PWR

Size: Custom | Document Number: LA-8224P | Rev: 0.2

Date: Thursday, October 27, 2011 | Sheet 17 of 59

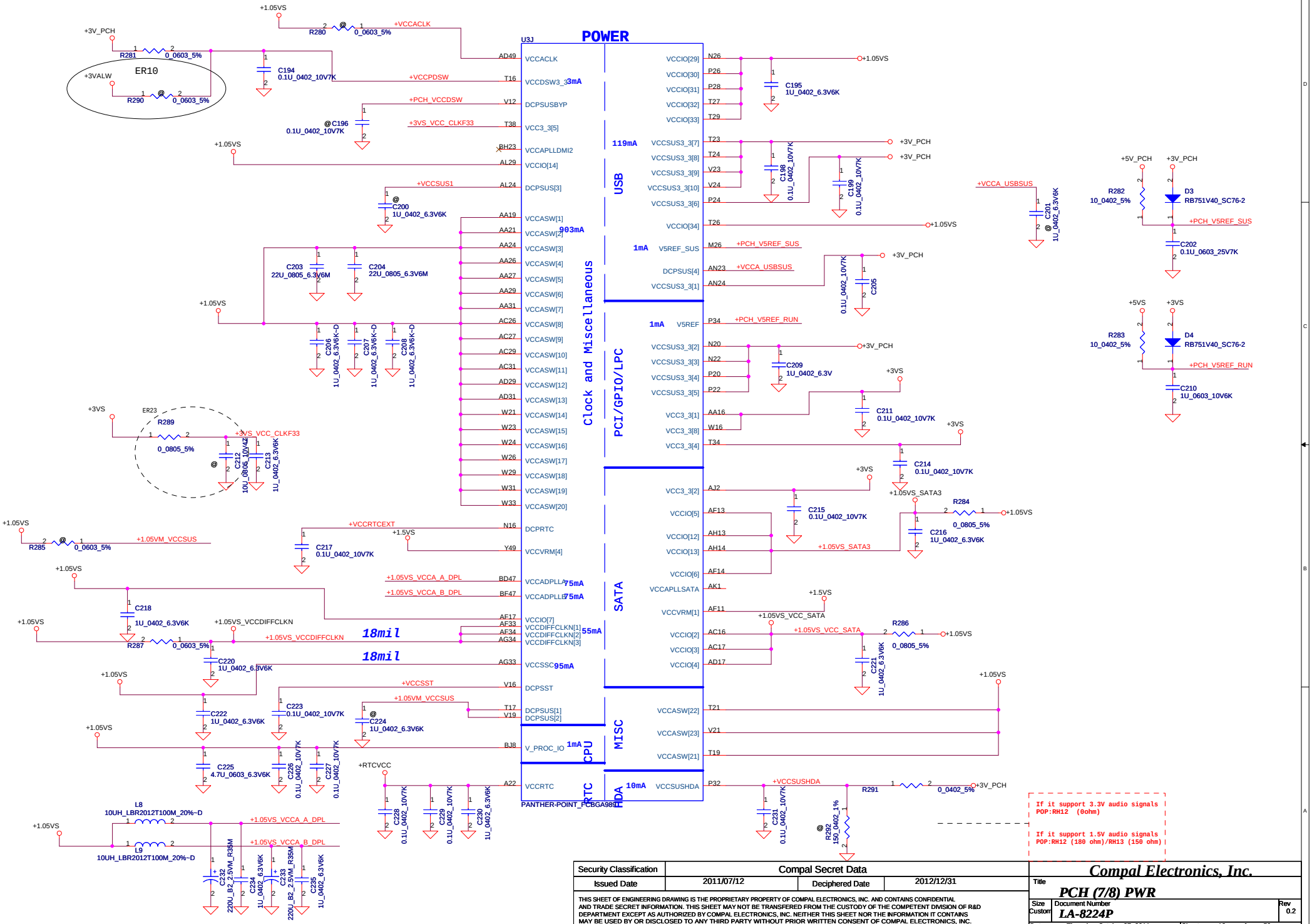

Security Classification	Compal Secret Data		
Issued Date	2011/07/12	Deciphered Date	2012/12/31

THIS SHEET OF ENGINEERING DRAWING IS THE PROPRIETARY PROPERTY OF COMPAL ELECTRONICS, INC. AND CONTAINS CONFIDENTIAL AND TRADE SECRET INFORMATION. THIS SHEET MAY NOT BE TRANSFERED FROM THE CUSTODY OF THE COMPETENT DIVISION OF R&D DEPARTMENT EXCEPT AS AUTHORIZED BY COMPAL ELECTRONICS, INC. NEITHER THIS SHEET NOR THE INFORMATION IT CONTAINS MAY BE USED BY OR DISCLOSED TO ANY THIRD PARTY WITHOUT PRIOR WRITTEN CONSENT OF COMPAL ELECTRONICS, INC.

Compal Electronics, Inc.

Title: PCH (7/8) PWR

Size: Custom | Document Number: LA-8224P | Rev: 0.2

Date: Thursday, October 27, 2011 | Sheet 18 of 59

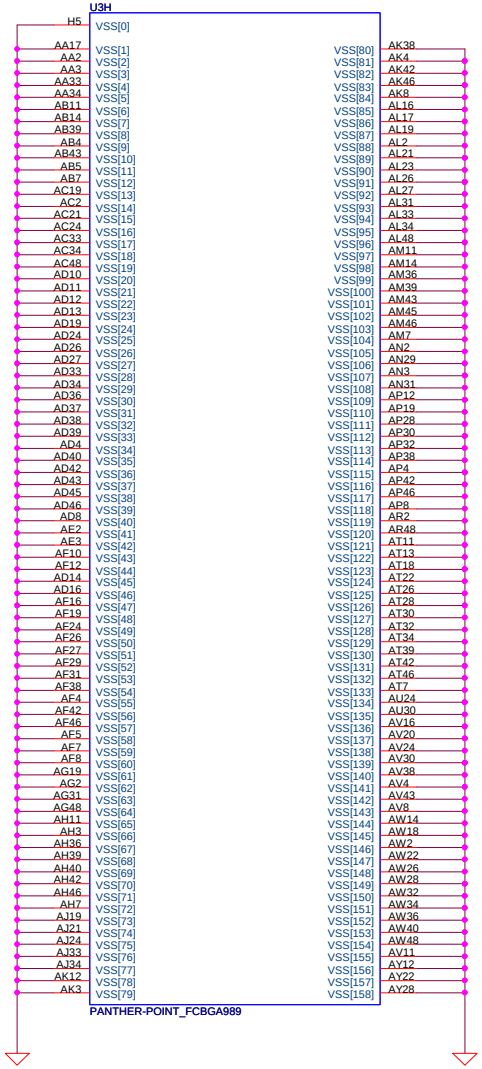

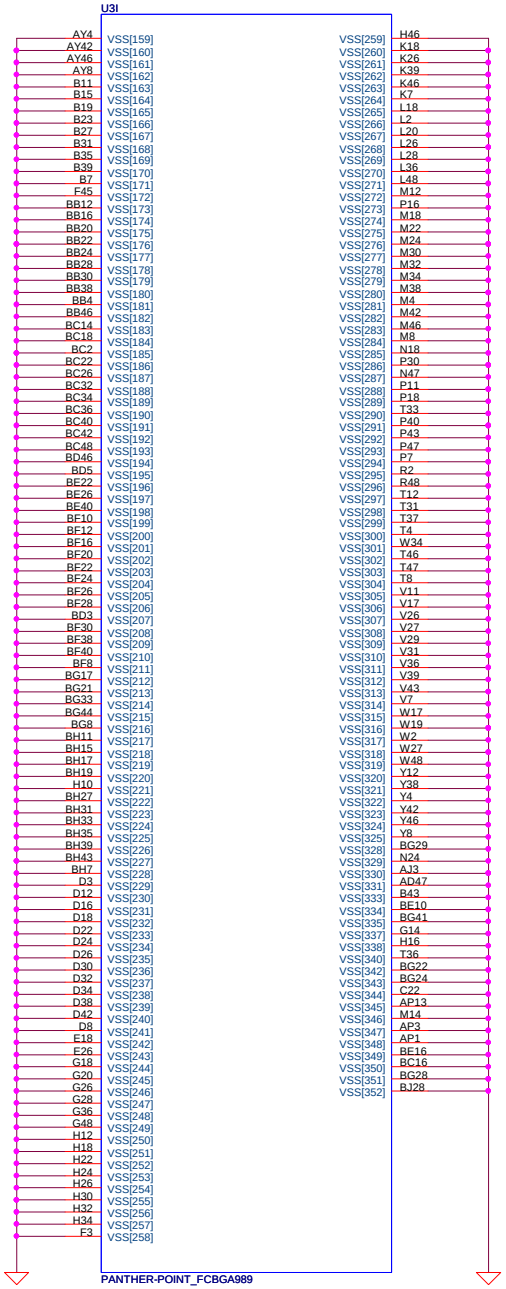

Security Classification	Compal Secret Data			Compal Electronics, Inc.
Issued Date	2011/07/12	Deciphered Date	2012/12/31	Title: PCH (8/8) VSS
				Size: Custom; Document Number: LA-8224P; Rev: 0.2
				Date: Thursday, October 27, 2011; Sheet 19 of 59

THIS SHEET OF ENGINEERING DRAWING IS THE PROPRIETARY PROPERTY OF COMPAL ELECTRONICS, INC. AND CONTAINS CONFIDENTIAL AND TRADE SECRET INFORMATION. THIS SHEET MAY NOT BE TRANSFERED FROM THE CUSTODY OF THE COMPETENT DIVISION OF R&D DEPARTMENT EXCEPT AS AUTHORIZED BY COMPAL ELECTRONICS, INC. NEITHER THIS SHEET NOR THE INFORMATION IT CONTAINS MAY BE USED BY OR DISCLOSED TO ANY THIRD PARTY WITHOUT PRIOR WRITTEN CONSENT OF COMPAL ELECTRONICS, INC.

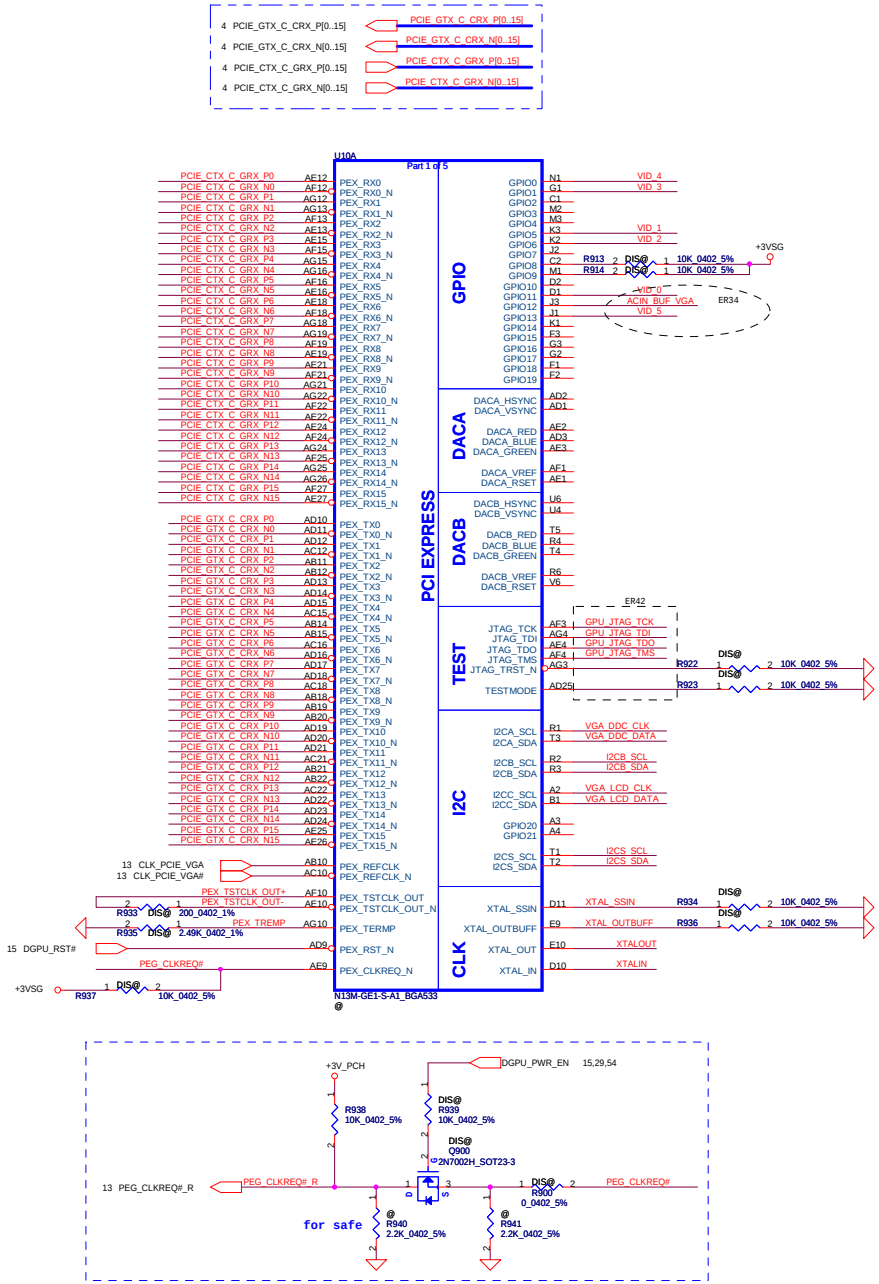

for GS4, the boot voltage is 0.975V
for GV4, the boot voltage is 0.85V

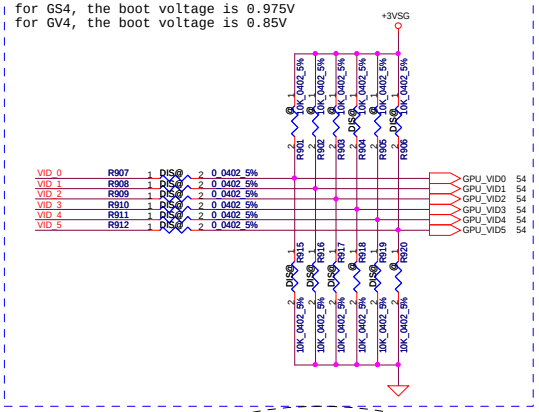

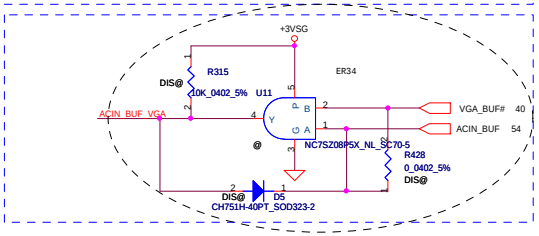

GPIO	I/O	USAGE
GPIO0	O	GPU_VID4
GPIO1	O	GPU_VID3
GPIO2	O	LCD_BL_PWM
GPIO3	O	LCD_VDD
GPIO4	O	LCD_BLEN
GPIO5	O	GPU_VID1
GPIO6	O	GPU_VID2
GPIO7	O	3D Vision
GPIO8	I/O	OVERT#
GPIO9	I/O	ALERT#
GPIO10	O	MEM_VREF_CTL
GPIO11	O	GPU_VID0
GPIO12	I	PWR_LEVEL
GPIO13	O	GPU_VID5
GPIO14	I	HPD_AB
GPIO15	I	HPD_C
GPIO16	O	MEM_VDD_CTL
GPIO17	I	HPD_D
GPIO18	I	HPD_E
GPIO19	I	HPD_F
GPIO20		Reserved
GPIO21		Reserved

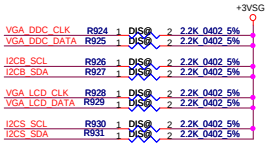

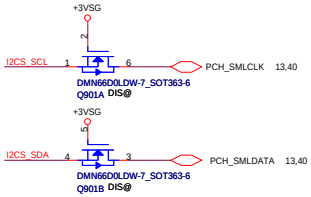

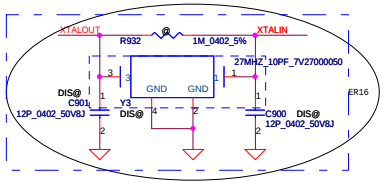

Security Classification	Compal Secret Data		
Issued Date	2011/07/12	Deciphered Date	2012/12/31

THIS SHEET OF ENGINEERING DRAWING IS THE PROPRIETARY PROPERTY OF COMPAL ELECTRONICS, INC. AND CONTAINS CONFIDENTIAL AND TRADE SECRET INFORMATION. THIS SHEET MAY NOT BE TRANSFERED FROM THE CUSTODY OF THE COMPETENT DIVISION OF R&D DEPARTMENT EXCEPT AS AUTHORIZED BY COMPAL ELECTRONICS, INC. NEITHER THIS SHEET NOR THE INFORMATION IT CONTAINS MAY BE USED BY OR DISCLOSED TO ANY THIRD PARTY WITHOUT PRIOR WRITTEN CONSENT OF COMPAL ELECTRONICS, INC.

Compal Electronics, Inc.

Title: N13M PEG 1/9

Size: C | Document Number: LA-8224P | Rev: 0.2

Date: Thursday, October 27, 2011 | Sheet 20 of 59

VRAM Interface

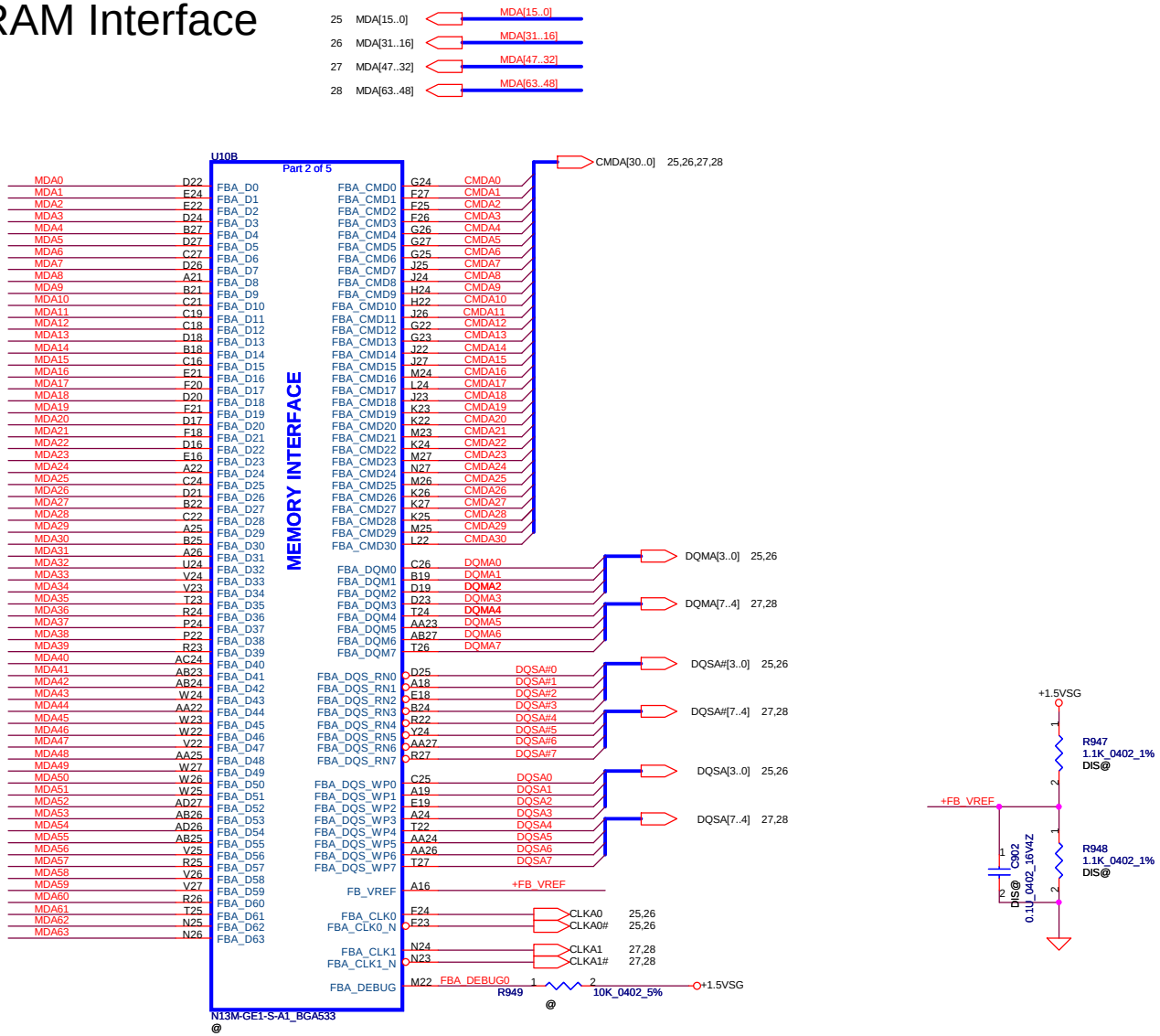

Security Classification	Compal Secret Data		
Issued Date	2011/07/12	Deciphered Date	2012/12/31

THIS SHEET OF ENGINEERING DRAWING IS THE PROPRIETARY PROPERTY OF COMPAL ELECTRONICS, INC. AND CONTAINS CONFIDENTIAL AND TRADE SECRET INFORMATION. THIS SHEET MAY NOT BE TRANSFERED FROM THE CUSTODY OF THE COMPETENT DIVISION OF R&D DEPARTMENT EXCEPT AS AUTHORIZED BY COMPAL ELECTRONICS, INC. NEITHER THIS SHEET NOR THE INFORMATION IT CONTAINS MAY BE USED BY OR DISCLOSED TO ANY THIRD PARTY WITHOUT PRIOR WRITTEN CONSENT OF COMPAL ELECTRONICS, INC.

Compal Electronics, Inc.

Title: **N13M VRAM 2/9**

Size: Custom | Document Number: **LA-8224P** | Rev: 0.2

Date: Thursday, October 27, 2011 | Sheet 21 of 59

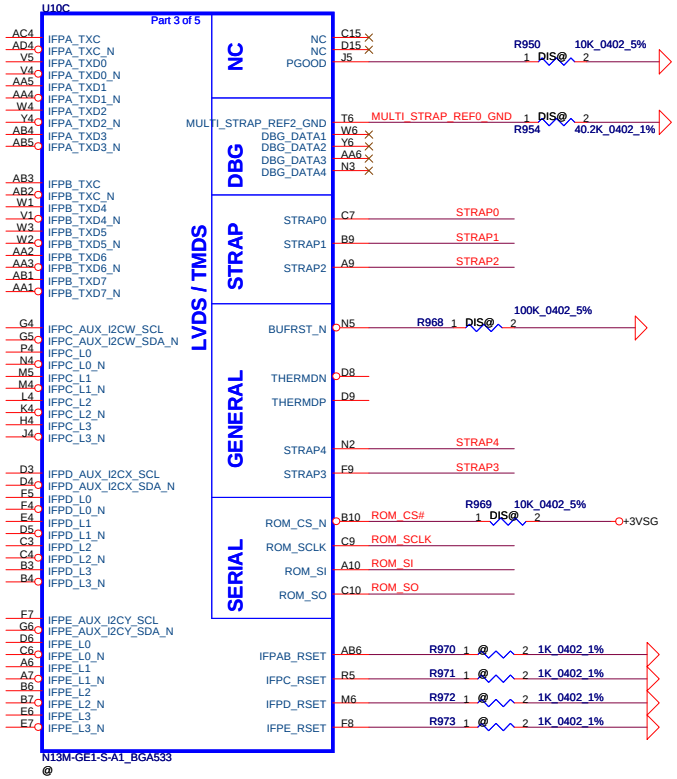

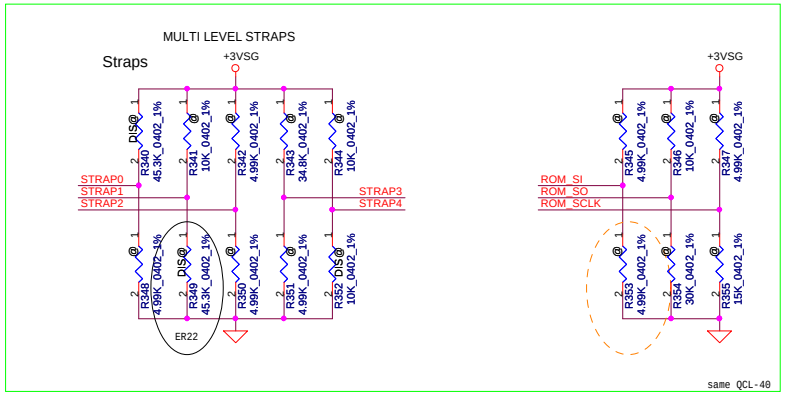

Need check with NVIDIA

For N13M-GE1 GB1b-64_256Mx8 strap table

GPU	Frenq.	Memory Size	Memory Config	strap0	strap1	strap2	strap3	strap4	ROM_SI	ROM_SO	ROM_SCLK
N13M-GE1	667+ MHz	256M* 8* 8 2GB	HYNIX SA000056O00 H5TQ2G83CFR-H9C	R PH 45K	R PL 45K	R PH 5K	R PL 5K	R PL 10K	R PL 10K	R PL 30K	R PH 5K
N13M-GE1	667+ MHz	256M* 8* 8 2GB	ELPIDA SA000056P00 EDJ2108BCSE-DJ-F	R PH 45K	R PL 45K	R PH 5K	R PL 5K	R PL 10K	R PL 5K	R PL 30K	R PH 5K
N13M-GE1	667+ MHz	512M* 8* 8 4GB	HYNIX SA00005BL00 H5TQ4G83MFR-PBC	R PH 45K	R PL 45K	R PH 5K	R PL 5K	R PL 10K	R PL 15K	R PL 30K	R PH 5K
N13M-GE1	667+ MHz	512M* 8* 8 4GB	ELPIDA SA00005AA00 EDJ4208BBBG-GN-F	R PH 45K	R PL 45K	R PH 5K	R PL 5K	R PL 10K	R PL 20K	R PL 30K	R PH 5K

SA000056A10
C.S N13M-GE1-S-A1 FCBGA533
NVIDIA GB1b-64 GF119-660-A1 (小包裝)
搭配VRAM 256*8*8

256M*8*8
1.SA000056O00
DDR3 1600 256*8 1.5V FBGA78
HYNIX/H5TQ2G83CFR-PBC
2.SA000056P00
DDR3 1600 256*8 1.5V FBGA78
ELPIDA/EDJ2108BDBG-GN-F

512M*8*8
1.SA00005BL00
DDR3 1600 512M*8 1.5V FBGA78
HYNIX/H5TQ4G83MFR-PBC
2.SA00005AA00
DDR3 1600 512M*8 1.5V FBGA78
ELPIDA/EDJ4208BBBG-GN-F

Security Classification	Compal Secret Data		
Issued Date	2011/07/12	Deciphered Date	2012/12/31

THIS SHEET OF ENGINEERING DRAWING IS THE PROPRIETARY PROPERTY OF COMPAL ELECTRONICS, INC. AND CONTAINS CONFIDENTIAL AND TRADE SECRET INFORMATION. THIS SHEET MAY NOT BE TRANSFERED FROM THE CUSTODY OF THE COMPETENT DIVISION OF R&D DEPARTMENT EXCEPT AS AUTHORIZED BY COMPAL ELECTRONICS, INC. NEITHER THIS SHEET NOR THE INFORMATION IT CONTAINS MAY BE USED BY OR DISCLOSED TO ANY THIRD PARTY WITHOUT PRIOR WRITTEN CONSENT OF COMPAL ELECTRONICS, INC.

Compal Electronics, Inc.

Title: **N13M LVDS 3/9**

Size: Custom | Document Number: **LA-8224P** | Rev: 0.2

Date: Thursday, October 27, 2011 | Sheet 22 of 59

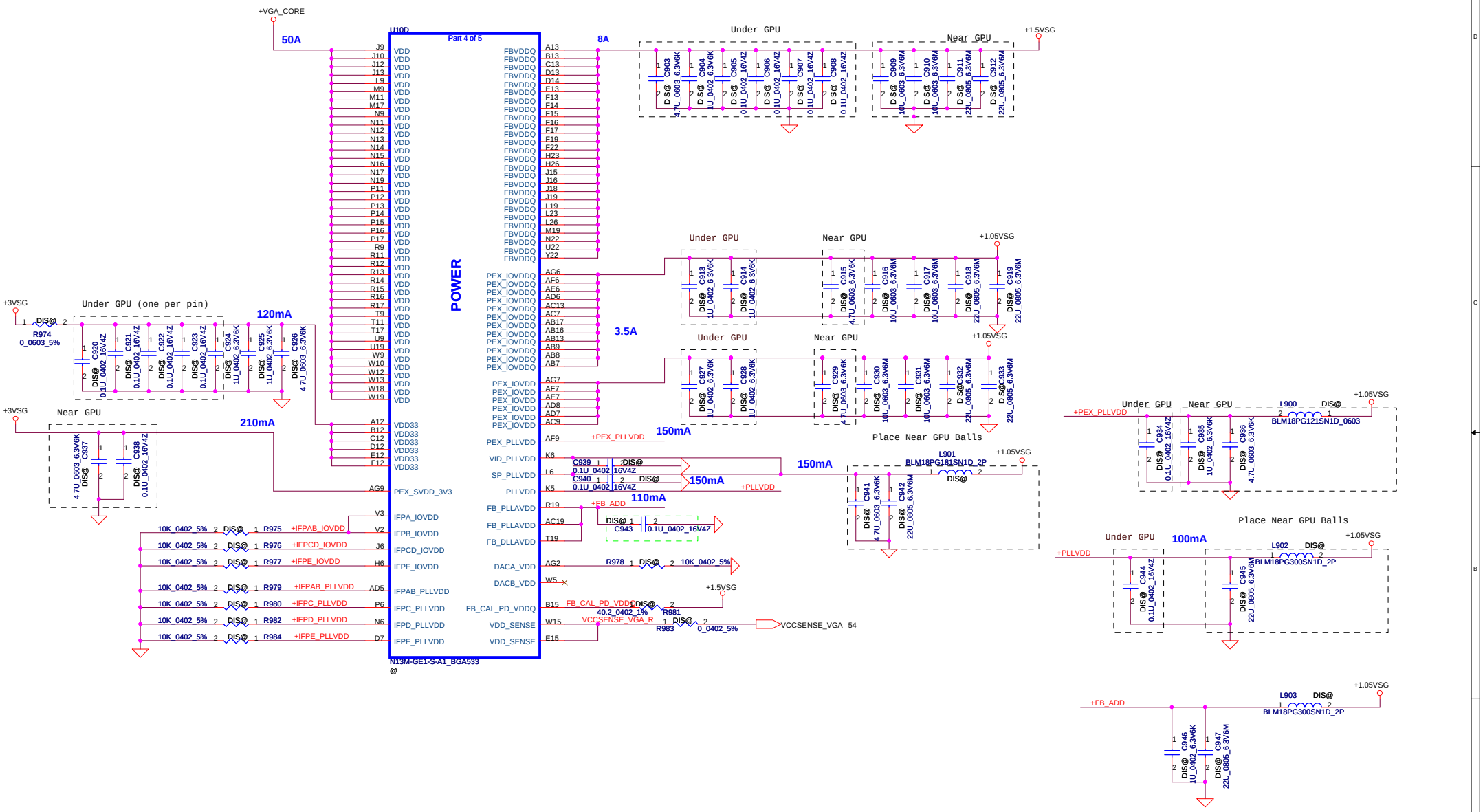

Security Classification	Compal Secret Data		
Issued Date	2011/07/12	Deciphered Date	2012/12/31

THIS SHEET OF ENGINEERING DRAWING IS THE PROPRIETARY PROPERTY OF COMPAL ELECTRONICS, INC. AND CONTAINS CONFIDENTIAL AND TRADE SECRET INFORMATION. THIS SHEET MAY NOT BE TRANSFERED FROM THE CUSTODY OF THE COMPETENT DIVISION OF R&D DEPARTMENT EXCEPT AS AUTHORIZED BY COMPAL ELECTRONICS, INC. NEITHER THIS SHEET NOR THE INFORMATION IT CONTAINS MAY BE USED BY OR DISCLOSED TO ANY THIRD PARTY WITHOUT PRIOR WRITTEN CONSENT OF COMPAL ELECTRONICS, INC.

Compal Electronics, Inc.

Title: **N13M POWER & GND 4/9**

Size: Custom | Document Number: **LA-8224P** | Rev: 0.2

Date: Thursday, October 27, 2011 | Sheet 23 of 59

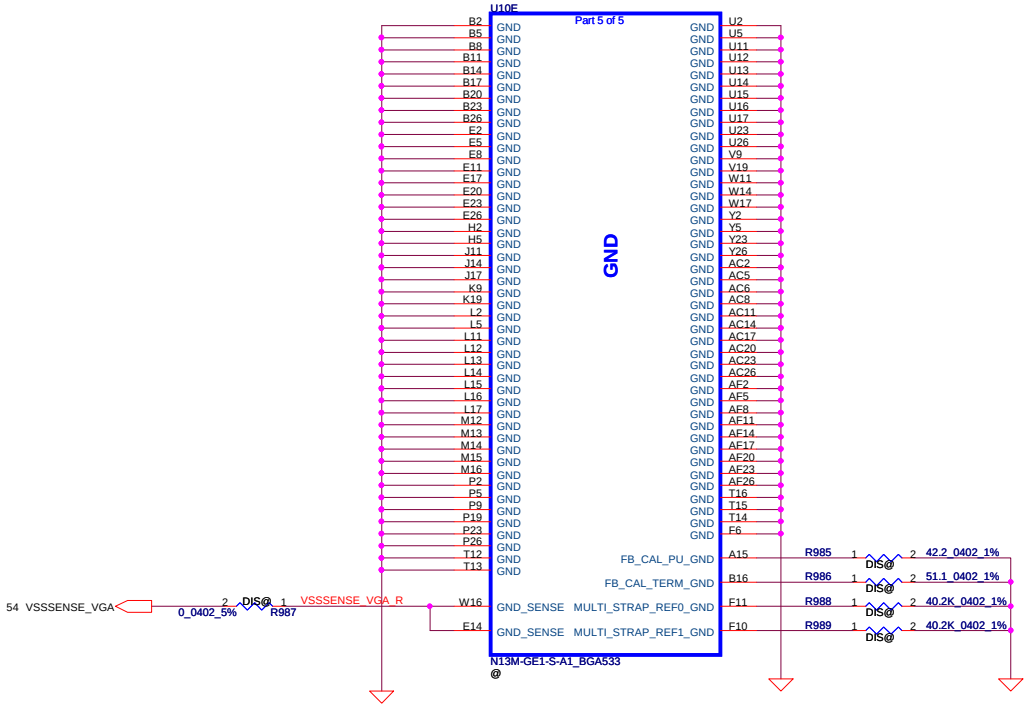

Security Classification	Compal Secret Data		
Issued Date	2011/07/12	Deciphered Date	2012/12/31

THIS SHEET OF ENGINEERING DRAWING IS THE PROPRIETARY PROPERTY OF COMPAL ELECTRONICS, INC. AND CONTAINS CONFIDENTIAL AND TRADE SECRET INFORMATION. THIS SHEET MAY NOT BE TRANSFERED FROM THE CUSTODY OF THE COMPETENT DIVISION OF R&D DEPARTMENT EXCEPT AS AUTHORIZED BY COMPAL ELECTRONICS, INC. NEITHER THIS SHEET NOR THE INFORMATION IT CONTAINS MAY BE USED BY OR DISCLOSED TO ANY THIRD PARTY WITHOUT PRIOR WRITTEN CONSENT OF COMPAL ELECTRONICS, INC.

Compal Electronics, Inc.

Title: **N13M POWER & GND 5/9**

Size: Custom | Document Number: **LA-8224P** | Rev: 0.2

Date: Thursday, October 27, 2011 | Sheet 24 of 59

VRAM DDR3 chips

256Mx8 DDR3 *8==>2GB

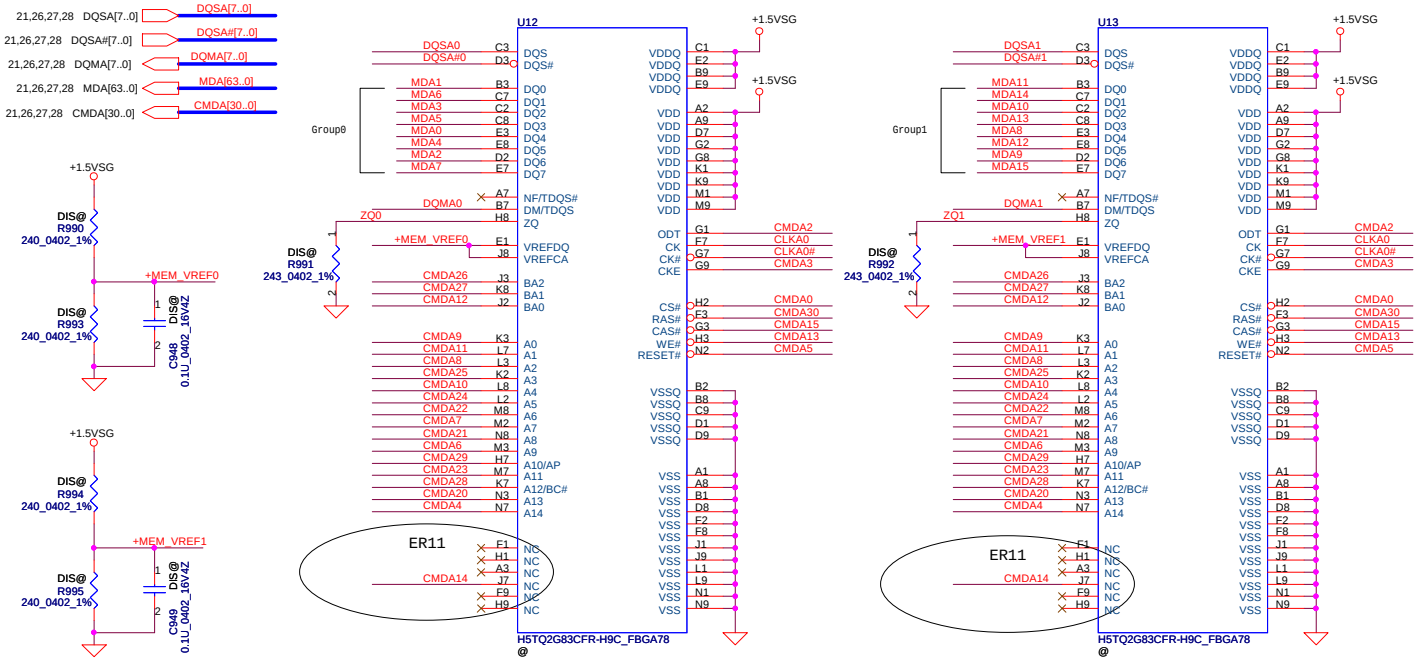

Mode D Address	0..31	32..63
CMD0	CS0_L#	
CMD1		
CMD2	ODT_L	
CMD3	CKE	
CMD4	A14	A14
CMD5	RST	RST
CMD6	A9	A9
CMD7	A7	A7
CMD8	A2	A2
CMD9	A0	A0
CMD10	A4	A4
CMD11	A1	A1
CMD12	BA0	BA0
CMD13	WE*	WE*
CMD14	A15	A15
CMD15	CAS*	CAS*
CMD16		CS0_H#
CMD17		
CMD18		ODT_H
CMD19		CKE_H
CMD20	A13	A13
CMD21	A8	A8
CMD22	A6	A6
CMD23	A11	A11
CMD24	A5	A5
CMD25	A3	A3
CMD26	BA2	BA2
CMD27	BA1	BA1
CMD28	A12	A12
CMD29	A10	A10
CMD30	RAS*	RAS*
Not Available		
	LOW	HIGH

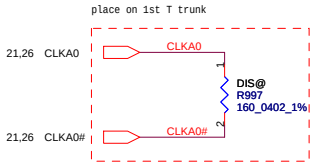

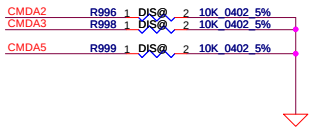

	Command Bit	Default Pull-down
DDR3	ODTx	10k
	CKEx	10k
	RST	10k
	CS*	No Termination

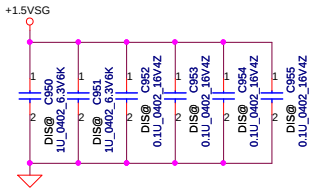

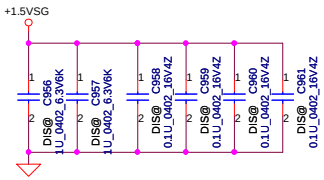

Hynix : SA000054600 (S IC D3 256MX8/1333 H5TQ2G83CFR-H9C FBGA)

Elpida : SAxxxxxxxxx (S IC D3 256MX8/1333 xxxxxxxxxxxxxxx)

Security Classification	Compal Secret Data		
Issued Date	2011/07/12	Deciphered Date	2012/12/31

THIS SHEET OF ENGINEERING DRAWING IS THE PROPRIETARY PROPERTY OF COMPAL ELECTRONICS, INC. AND CONTAINS CONFIDENTIAL AND TRADE SECRET INFORMATION. THIS SHEET MAY NOT BE TRANSFERRED FROM THE CUSTODY OF THE COMPETENT DIVISION OF R&D DEPARTMENT EXCEPT AS AUTHORIZED BY COMPAL ELECTRONICS, INC. NEITHER THIS SHEET NOR THE INFORMATION IT CONTAINS MAY BE USED BY OR DISCLOSED TO ANY THIRD PARTY WITHOUT PRIOR WRITTEN CONSENT OF COMPAL ELECTRONICS, INC.

Compal Electronics, Inc.

Title: **N13M DDR3 6/9**

Size: Custom | Document Number: **LA-8224P** | Rev: 0.2

Date: Thursday, October 27, 2011 | Sheet 25 of 59

VRAM DDR3 chips

256Mx8 DDR3 *8==>2GB

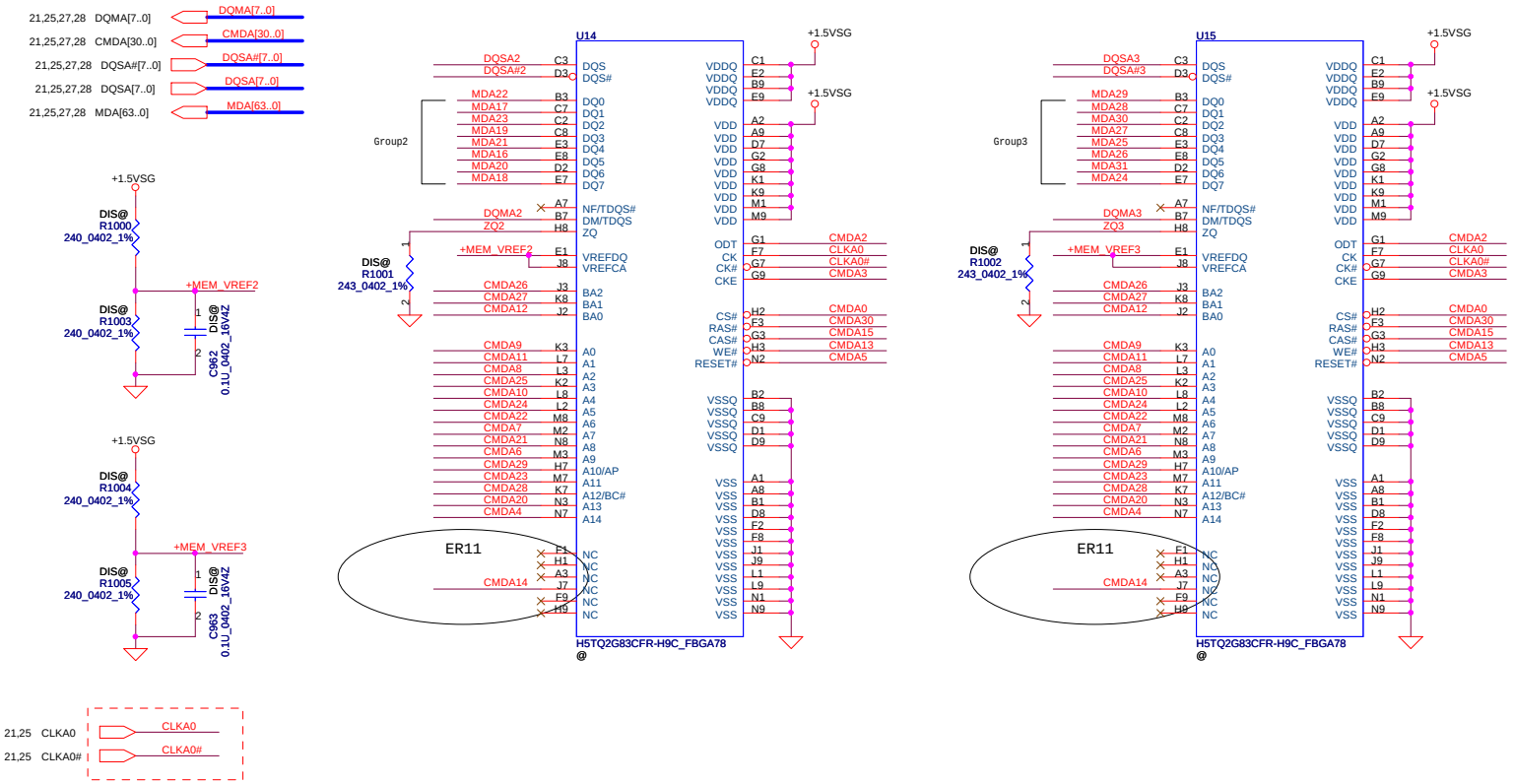

Mode D Address	0..31	32..63
CMD0	CS0_L#	
CMD1		
CMD2	ODT_L	
CMD3	CKE	
CMD4	A14	A14
CMD5	RST	RST
CMD6	A9	A9
CMD7	A7	A7
CMD8	A2	A2
CMD9	A0	A0
CMD10	A4	A4
CMD11	A1	A1
CMD12	BA0	BA0
CMD13	WE*	WE*
CMD14	A15	A15
CMD15	CAS*	CAS*
CMD16		CS0_H#
CMD17		
CMD18		ODT_H
CMD19		CKE_H
CMD20	A13	A13
CMD21	A8	A8
CMD22	A6	A6
CMD23	A11	A11
CMD24	A5	A5
CMD25	A3	A3
CMD26	BA2	BA2
CMD27	BA1	BA1
CMD28	A12	A12
CMD29	A10	A10
CMD30	RAS*	RAS*
Not Available		
	LOW	HIGH

Security Classification	Compal Secret Data		
Issued Date	2011/07/12	Deciphered Date	2012/12/31

THIS SHEET OF ENGINEERING DRAWING IS THE PROPRIETARY PROPERTY OF COMPAL ELECTRONICS, INC. AND CONTAINS CONFIDENTIAL AND TRADE SECRET INFORMATION. THIS SHEET MAY NOT BE TRANSFERED FROM THE CUSTODY OF THE COMPETENT DIVISION OF R&D DEPARTMENT EXCEPT AS AUTHORIZED BY COMPAL ELECTRONICS, INC. NEITHER THIS SHEET NOR THE INFORMATION IT CONTAINS MAY BE USED BY OR DISCLOSED TO ANY THIRD PARTY WITHOUT PRIOR WRITTEN CONSENT OF COMPAL ELECTRONICS, INC.

Compal Electronics, Inc.

Title: **N13M DDR3 7/9**

Size: Custom | Document Number: **LA-8224P** | Rev: 0.2

Date: Thursday, October 27, 2011 | Sheet 26 of 59

VRAM DDR3 chips

256Mx8 DDR3 *8==>2GB

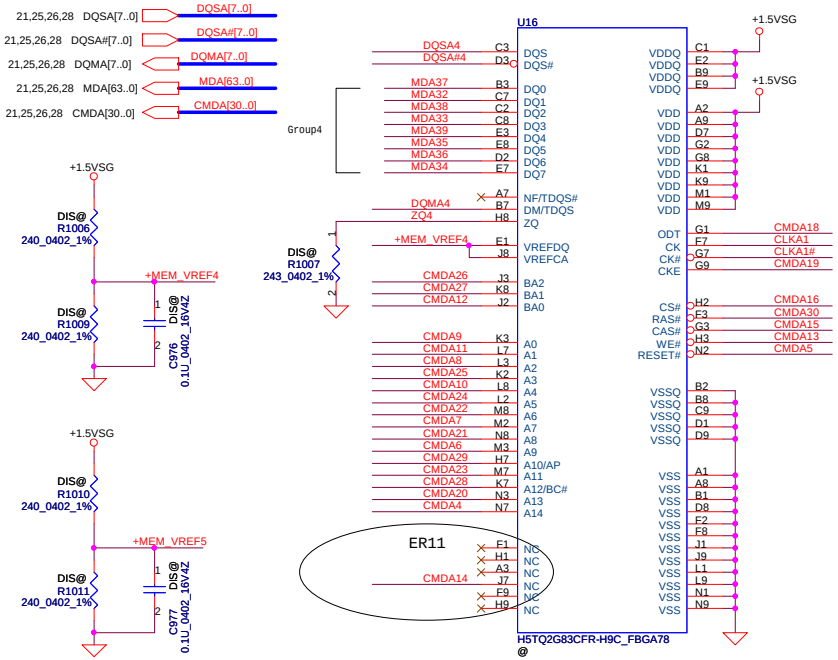

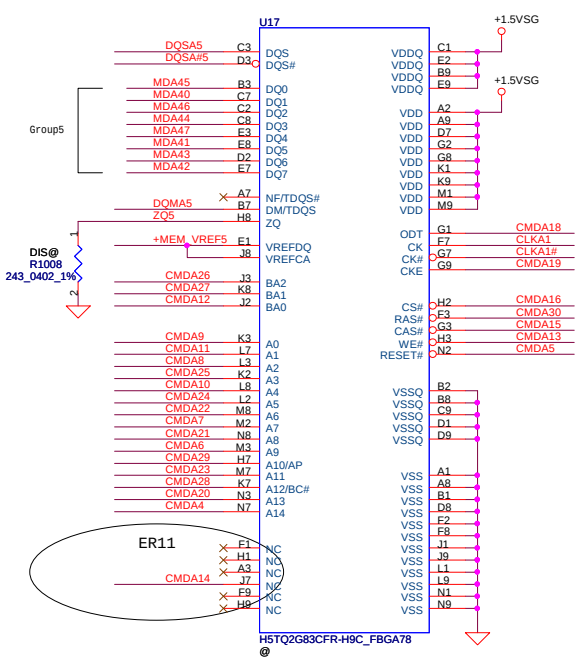

Mode D Address	0..31	32..63
CMD0	CS0_L#	
CMD1		
CMD2	ODT_L	
CMD3	CKE	
CMD4	A14	A14
CMD5	RST	RST
CMD6	A9	A9
CMD7	A7	A7
CMD8	A2	A2
CMD9	A0	A0
CMD10	A4	A4
CMD11	A1	A1
CMD12	BA0	BA0
CMD13	WE*	WE*
CMD14	A15	A15
CMD15	CAS*	CAS*
CMD16		CS0_H#
CMD17		
CMD18		ODT_H
CMD19		CKE_H
CMD20	A13	A13
CMD21	A8	A8
CMD22	A6	A6
CMD23	A11	A11
CMD24	A5	A5
CMD25	A3	A3
CMD26	BA2	BA2
CMD27	BA1	BA1
CMD28	A12	A12
CMD29	A10	A10
CMD30	RAS*	RAS*
Not Available		
	LOW	HIGH

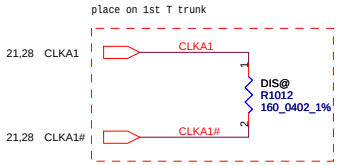

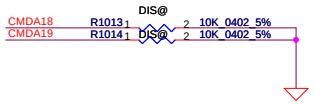

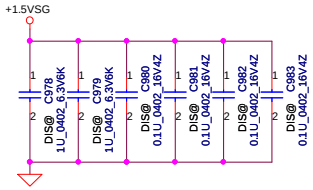

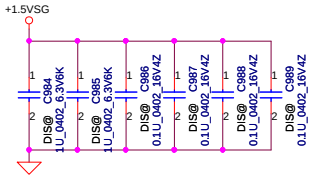

Hynix : SA000054600 (S IC D3 256MX8/1333 H5TQ2G83CFR-H9C FBGA)

Elpida : SAxxxxxxxxx (S IC D3 256MX8/1333 xxxxxxxxxxxxxxx)

Security Classification	Compal Secret Data		
Issued Date	2011/07/12	Deciphered Date	2012/12/31

THIS SHEET OF ENGINEERING DRAWING IS THE PROPRIETARY PROPERTY OF COMPAL ELECTRONICS, INC. AND CONTAINS CONFIDENTIAL AND TRADE SECRET INFORMATION. THIS SHEET MAY NOT BE TRANSFERED FROM THE CUSTODY OF THE COMPETENT DIVISION OF R&D DEPARTMENT EXCEPT AS AUTHORIZED BY COMPAL ELECTRONICS, INC. NEITHER THIS SHEET NOR THE INFORMATION IT CONTAINS MAY BE USED BY OR DISCLOSED TO ANY THIRD PARTY WITHOUT PRIOR WRITTEN CONSENT OF COMPAL ELECTRONICS, INC.

Compal Electronics, Inc.

Title: **N13M DDR3 8/9**

Size: Custom | Document Number: **LA-8224P** | Rev: 0.2

Date: Thursday, October 27, 2011 | Sheet 27 of 59

VRAM DDR3 chips

256Mx8 DDR3 *8==>2GB

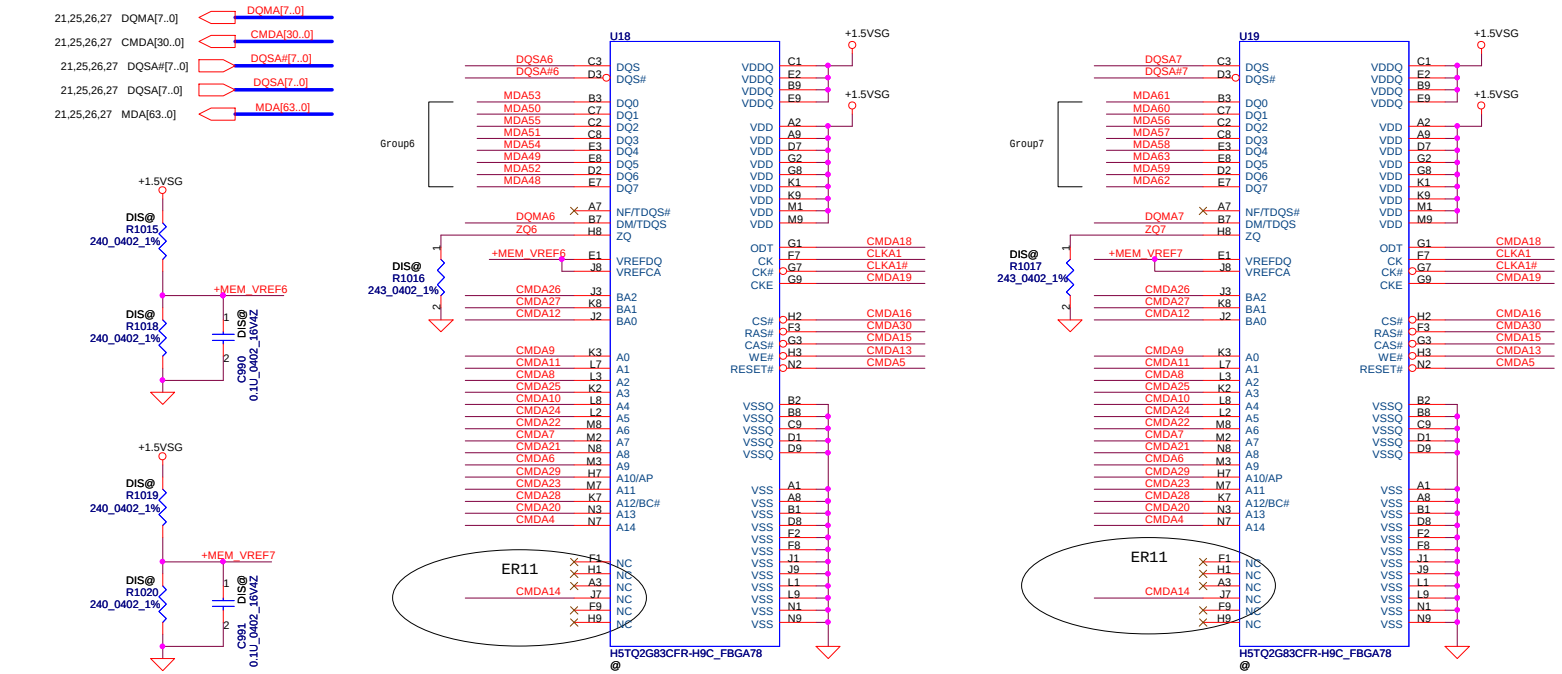

Mode D Address	0..31	32..63
CMD0	CS0_L#	
CMD1		
CMD2	ODT_L	
CMD3	CKE	
CMD4	A14	A14
CMD5	RST	RST
CMD6	A9	A9
CMD7	A7	A7
CMD8	A2	A2
CMD9	A0	A0
CMD10	A4	A4
CMD11	A1	A1
CMD12	BA0	BA0
CMD13	WE*	WE*
CMD14	A15	A15
CMD15	CAS*	CAS*
CMD16		CS0_H#
CMD17		
CMD18		ODT_H
CMD19		CKE_H
CMD20	A13	A13
CMD21	A8	A8
CMD22	A6	A6
CMD23	A11	A11
CMD24	A5	A5
CMD25	A3	A3
CMD26	BA2	BA2
CMD27	BA1	BA1
CMD28	A12	A12
CMD29	A10	A10
CMD30	RAS*	RAS*
Not Available		
	LOW	HIGH

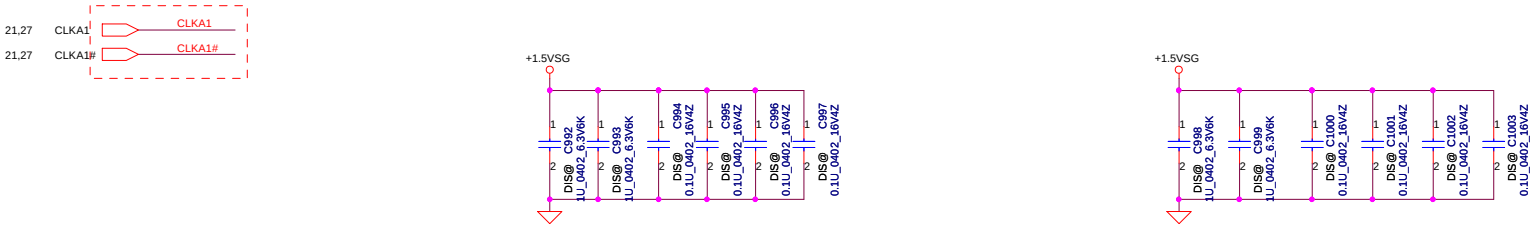

Security Classification	Compal Secret Data		
Issued Date	2011/07/12	Deciphered Date	2012/12/31

THIS SHEET OF ENGINEERING DRAWING IS THE PROPRIETARY PROPERTY OF COMPAL ELECTRONICS, INC. AND CONTAINS CONFIDENTIAL AND TRADE SECRET INFORMATION. THIS SHEET MAY NOT BE TRANSFERED FROM THE CUSTODY OF THE COMPETENT DIVISION OF R&D DEPARTMENT EXCEPT AS AUTHORIZED BY COMPAL ELECTRONICS, INC. NEITHER THIS SHEET NOR THE INFORMATION IT CONTAINS MAY BE USED BY OR DISCLOSED TO ANY THIRD PARTY WITHOUT PRIOR WRITTEN CONSENT OF COMPAL ELECTRONICS, INC.

Compal Electronics, Inc.

Title: **N13M DDR3 9/9**

Size: Custom | Document Number: **LA-8224P** | Rev: 0.2

Date: Thursday, October 27, 2011 | Sheet 28 of 59

+1.5V to +1.5VSG

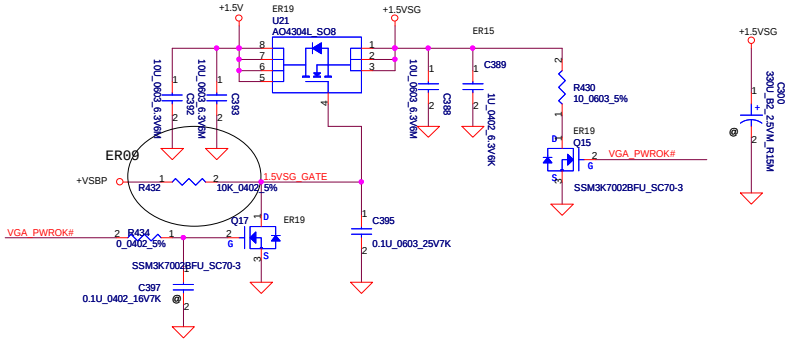

+VCCP to +1.05VSG

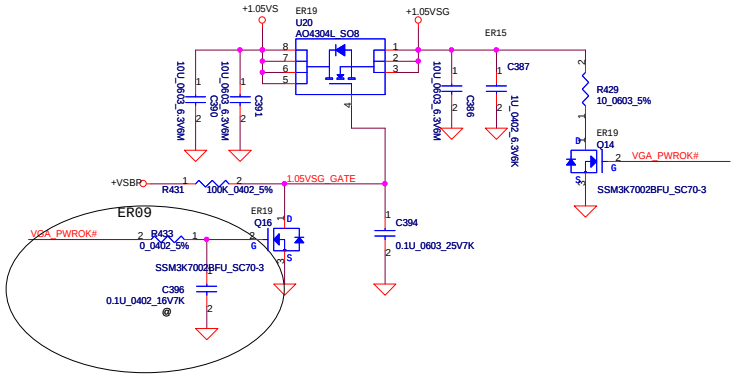

+3VS to +3VSG

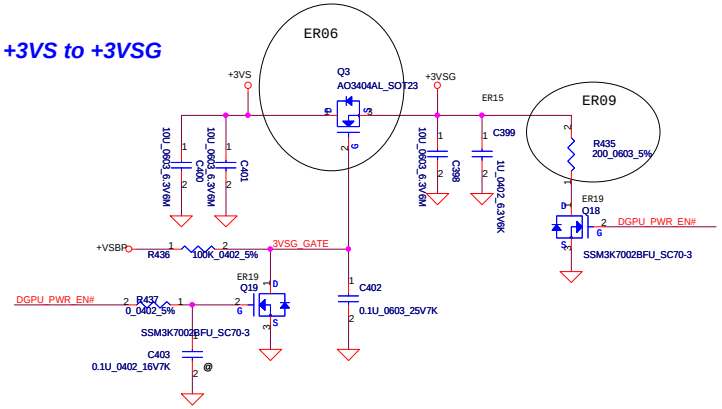

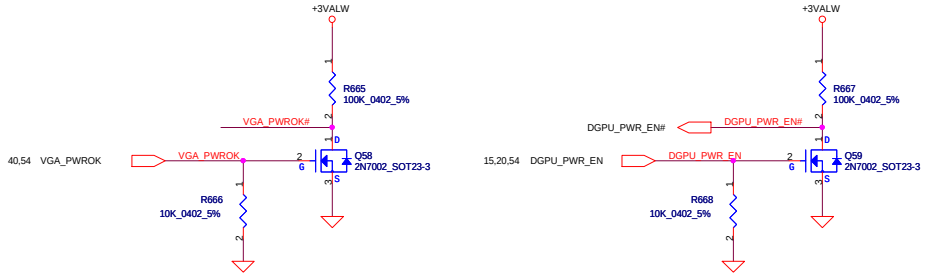

Security Classification	Compal Secret Data		
Issued Date	2011/07/12	Deciphered Date	2012/12/31

THIS SHEET OF ENGINEERING DRAWING IS THE PROPRIETARY PROPERTY OF COMPAL ELECTRONICS, INC. AND CONTAINS CONFIDENTIAL AND TRADE SECRET INFORMATION. THIS SHEET MAY NOT BE TRANSFERED FROM THE CUSTODY OF THE COMPETENT DIVISION OF R&D DEPARTMENT EXCEPT AS AUTHORIZED BY COMPAL ELECTRONICS, INC. NEITHER THIS SHEET NOR THE INFORMATION IT CONTAINS MAY BE USED BY OR DISCLOSED TO ANY THIRD PARTY WITHOUT PRIOR WRITTEN CONSENT OF COMPAL ELECTRONICS, INC.

Compal Electronics, Inc.

Title: **PCH (2/8) PCIE, SMBUS, CLK**

Size	Document Number	Rev
Custom	LA-8224P	0.2

Date: Thursday, October 27, 2011 | Sheet 29 of 59

CRT

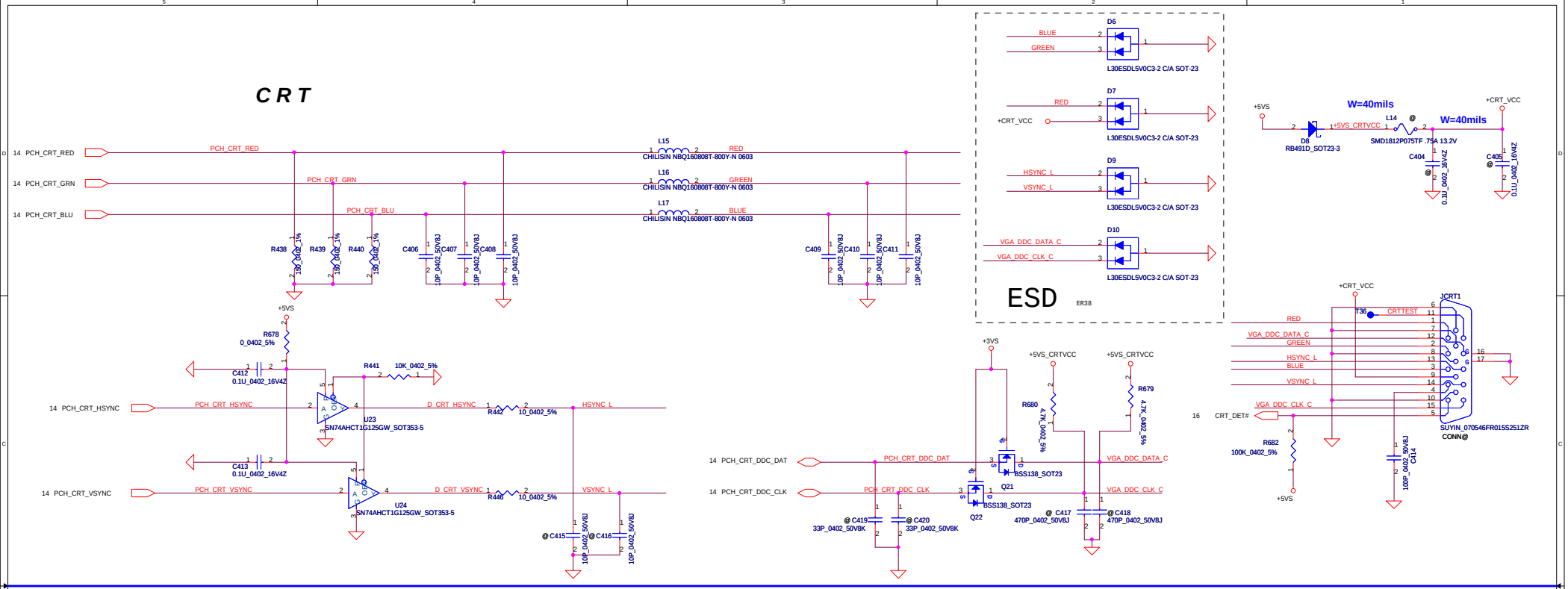

LCD POWER CIRCUIT

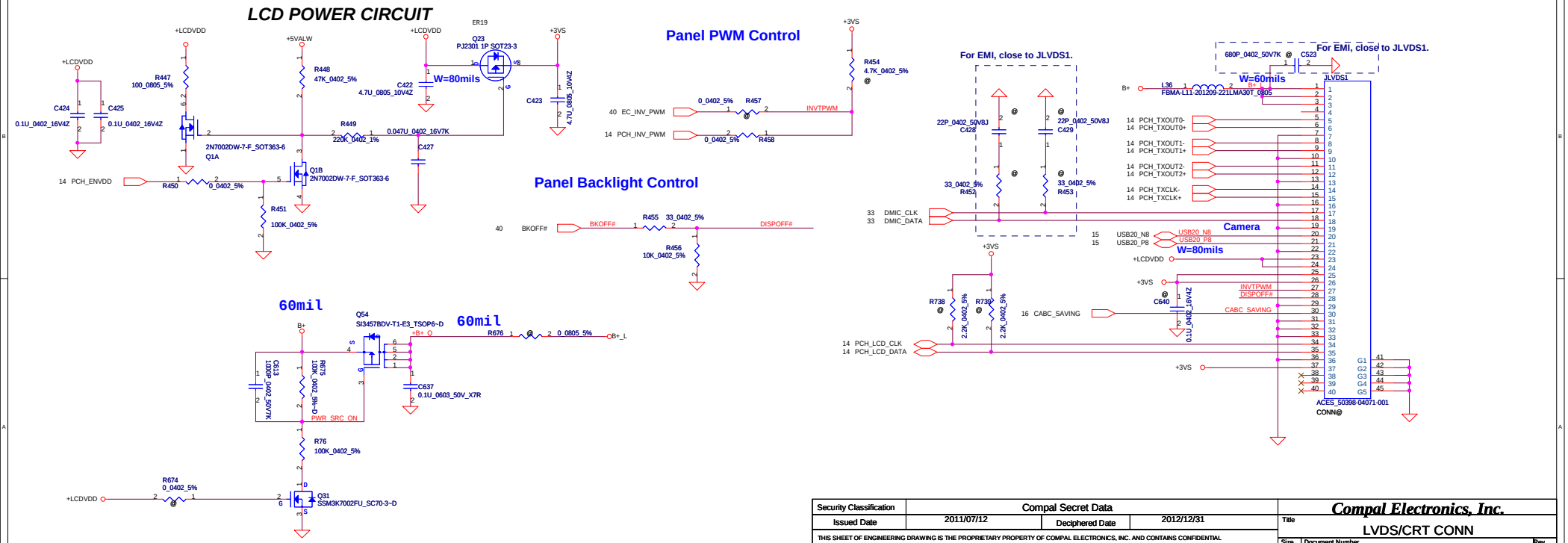

Security Classification	Compal Secret Data		
Issued Date	2011/07/12	Deciphered Date	2012/12/31

THIS SHEET OF ENGINEERING DRAWING IS THE PROPRIETARY PROPERTY OF COMPAL ELECTRONICS, INC. AND CONTAINS CONFIDENTIAL AND TRADE SECRET INFORMATION. THIS SHEET MAY NOT BE TRANSFERED FROM THE CUSTODY OF THE COMPETENT DIVISION OF R&D DEPARTMENT EXCEPT AS AUTHORIZED BY COMPAL ELECTRONICS, INC. NEITHER THIS SHEET NOR THE INFORMATION IT CONTAINS MAY BE USED BY OR DISCLOSED TO ANY THIRD PARTY WITHOUT PRIOR WRITTEN CONSENT OF COMPAL ELECTRONICS, INC.

Compal Electronics, Inc.

Title: LVDS/CRT CONN

Size: C | Document Number: LA-8224P | Rev: 0.2

Date: Thursday, October 27, 2011 | Sheet 30 of 59

SATA HDD Conn.

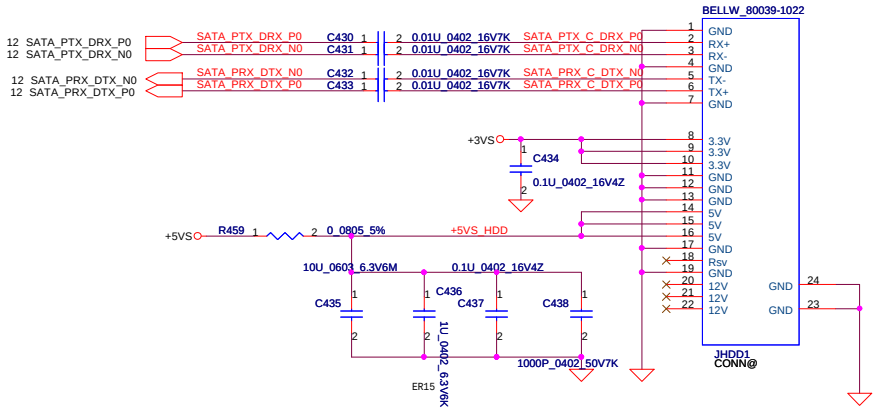

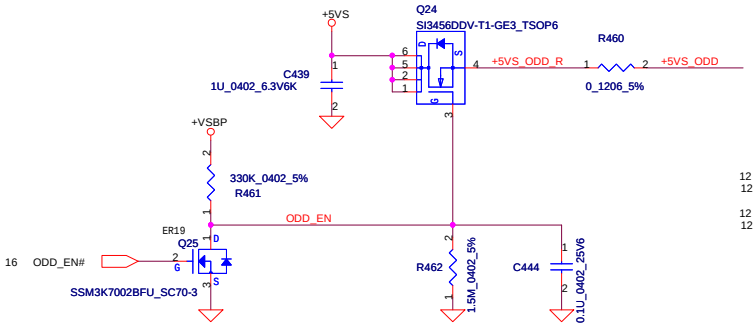

SATA ODD Conn.

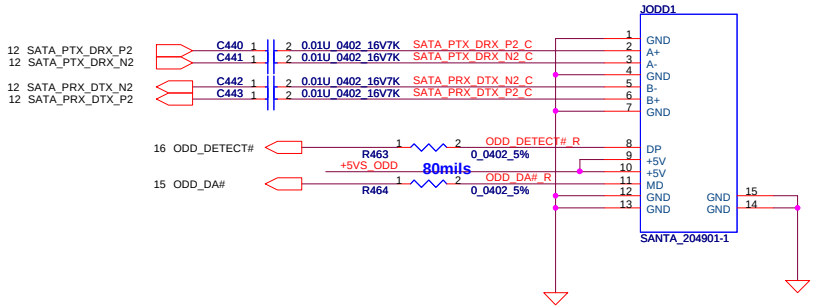

Placea caps. near ODD CONN.

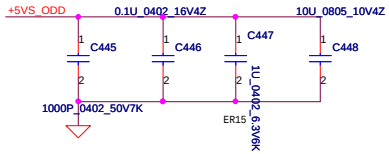

Security Classification	Compal Secret Data		
Issued Date	2011/07/12	Deciphered Date	2012/12/31

THIS SHEET OF ENGINEERING DRAWING IS THE PROPRIETARY PROPERTY OF COMPAL ELECTRONICS, INC. AND CONTAINS CONFIDENTIAL AND TRADE SECRET INFORMATION. THIS SHEET MAY NOT BE TRANSFERED FROM THE CUSTODY OF THE COMPETENT DIVISION OF R&D DEPARTMENT EXCEPT AS AUTHORIZED BY COMPAL ELECTRONICS, INC. NEITHER THIS SHEET NOR THE INFORMATION IT CONTAINS MAY BE USED BY OR DISCLOSED TO ANY THIRD PARTY WITHOUT PRIOR WRITTEN CONSENT OF COMPAL ELECTRONICS, INC.

Compal Electronics, Inc.

Title: HDD & ODD CONN

Size: B | Document Number: LA-8224P | Rev: 0.2

Date: Thursday, October 27, 2011 | Sheet 31 of 59

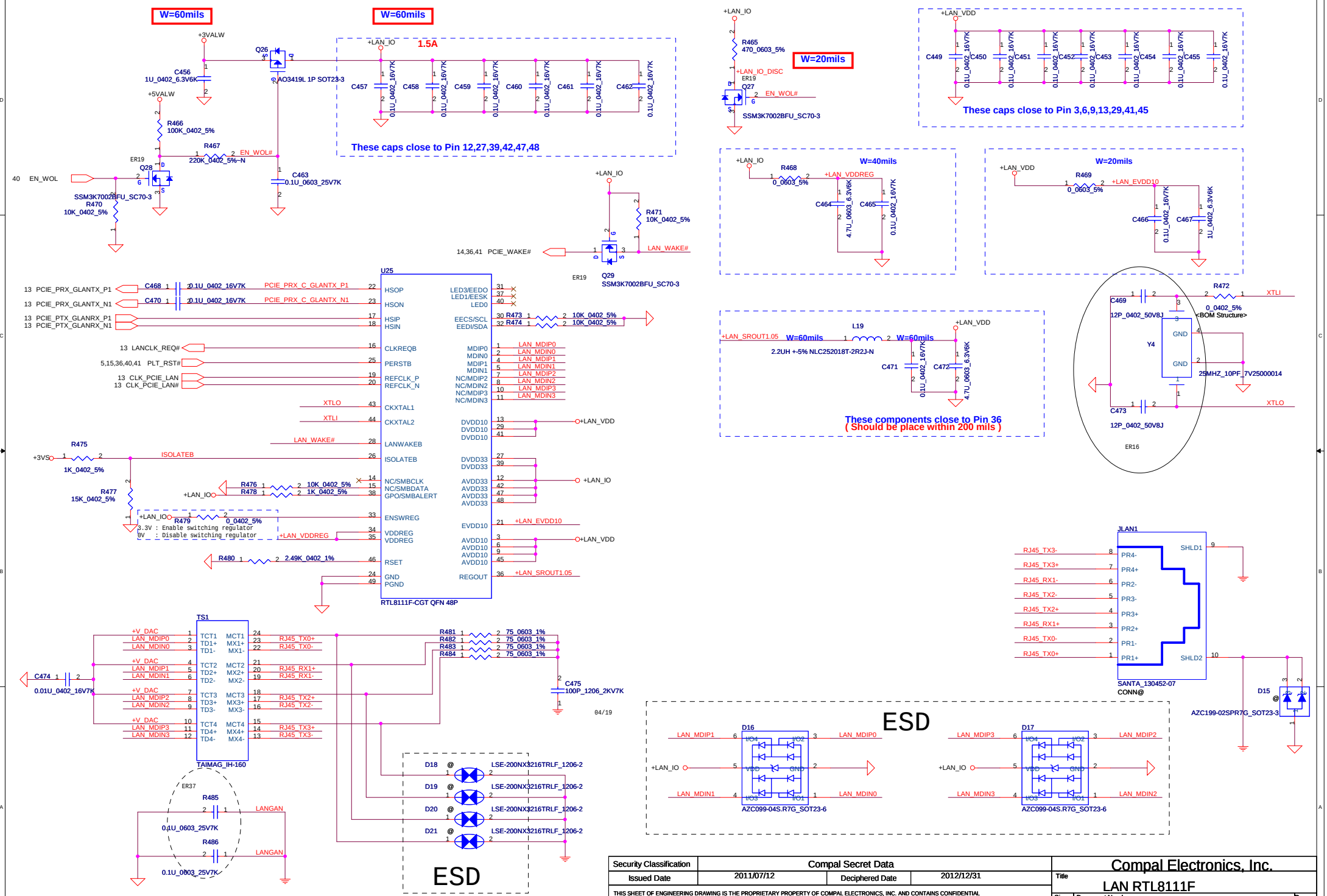

Security Classification	Compal Secret Data		
Issued Date	2011/07/12	Deciphered Date	2012/12/31

THIS SHEET OF ENGINEERING DRAWING IS THE PROPRIETARY PROPERTY OF COMPAL ELECTRONICS, INC. AND CONTAINS CONFIDENTIAL AND TRADE SECRET INFORMATION. THIS SHEET MAY NOT BE TRANSFERED FROM THE CUSTODY OF THE COMPETENT DIVISION OF R&D DEPARTMENT EXCEPT AS AUTHORIZED BY COMPAL ELECTRONICS, INC. NEITHER THIS SHEET NOR THE INFORMATION IT CONTAINS MAY BE USED BY OR DISCLOSED TO ANY THIRD PARTY WITHOUT PRIOR WRITTEN CONSENT OF COMPAL ELECTRONICS, INC.

Compal Electronics, Inc.

Title: LAN RTL8111F

Size: Custom | Document Number: LA-8224P | Rev: 0.2

Date: Thursday, October 27, 2011 | Sheet 32 of 59

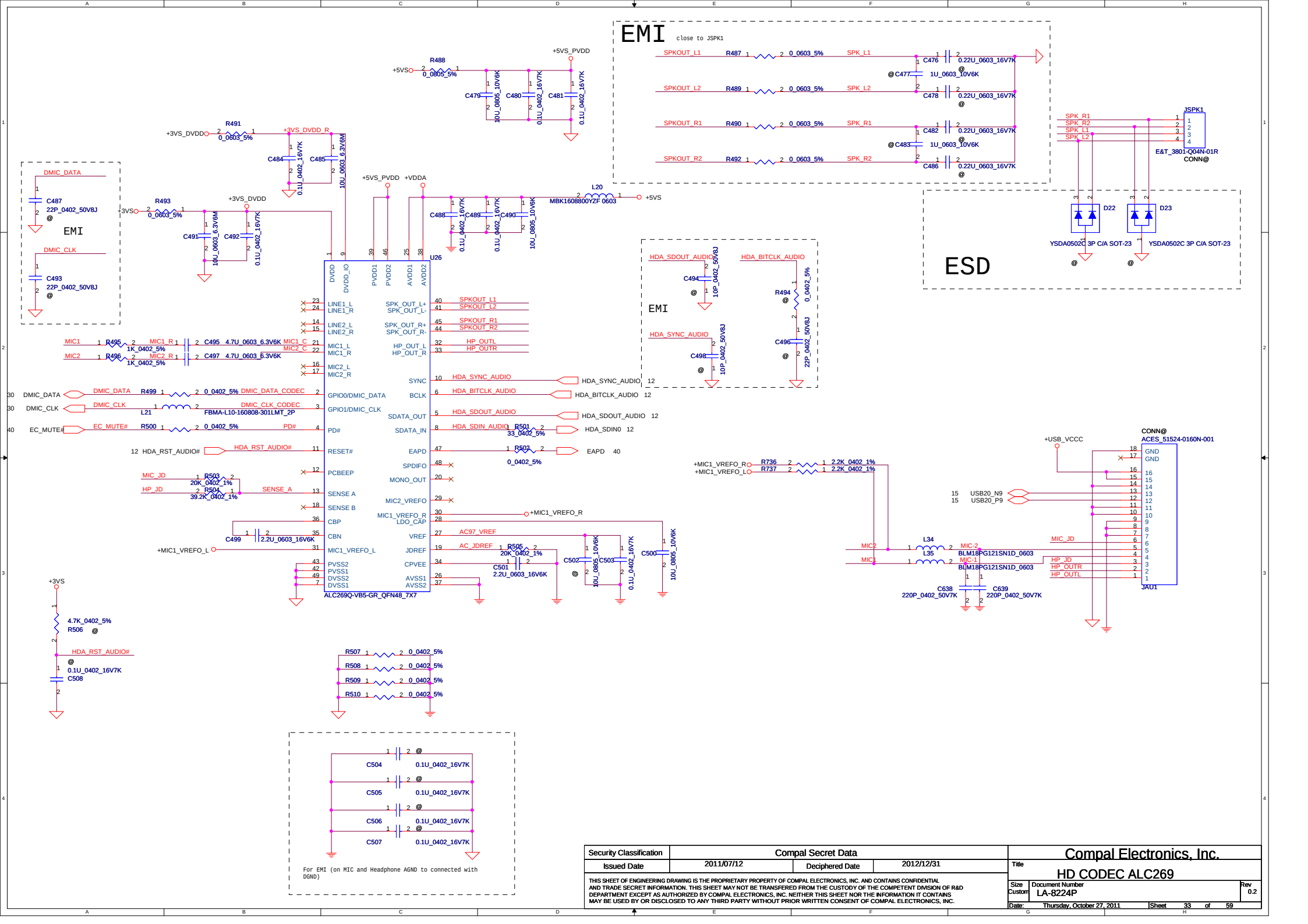

Security Classification	Compal Secret Data		
Issued Date	2011/07/12	Deciphered Date	2012/12/31

THIS SHEET OF ENGINEERING DRAWING IS THE PROPRIETARY PROPERTY OF COMPAL ELECTRONICS, INC. AND CONTAINS CONFIDENTIAL AND TRADE SECRET INFORMATION. THIS SHEET MAY NOT BE TRANSFERED FROM THE CUSTODY OF THE COMPETENT DIVISION OF R&D DEPARTMENT EXCEPT AS AUTHORIZED BY COMPAL ELECTRONICS, INC. NEITHER THIS SHEET NOR THE INFORMATION IT CONTAINS MAY BE USED BY OR DISCLOSED TO ANY THIRD PARTY WITHOUT PRIOR WRITTEN CONSENT OF COMPAL ELECTRONICS, INC.

Compal Electronics, Inc.

Title: HD CODEC ALC269

Size: Custom | Document Number: LA-8224P | Rev: 0.2

Date: Thursday, October 27, 2011 | Sheet 33 of 59

Card Reader Connector

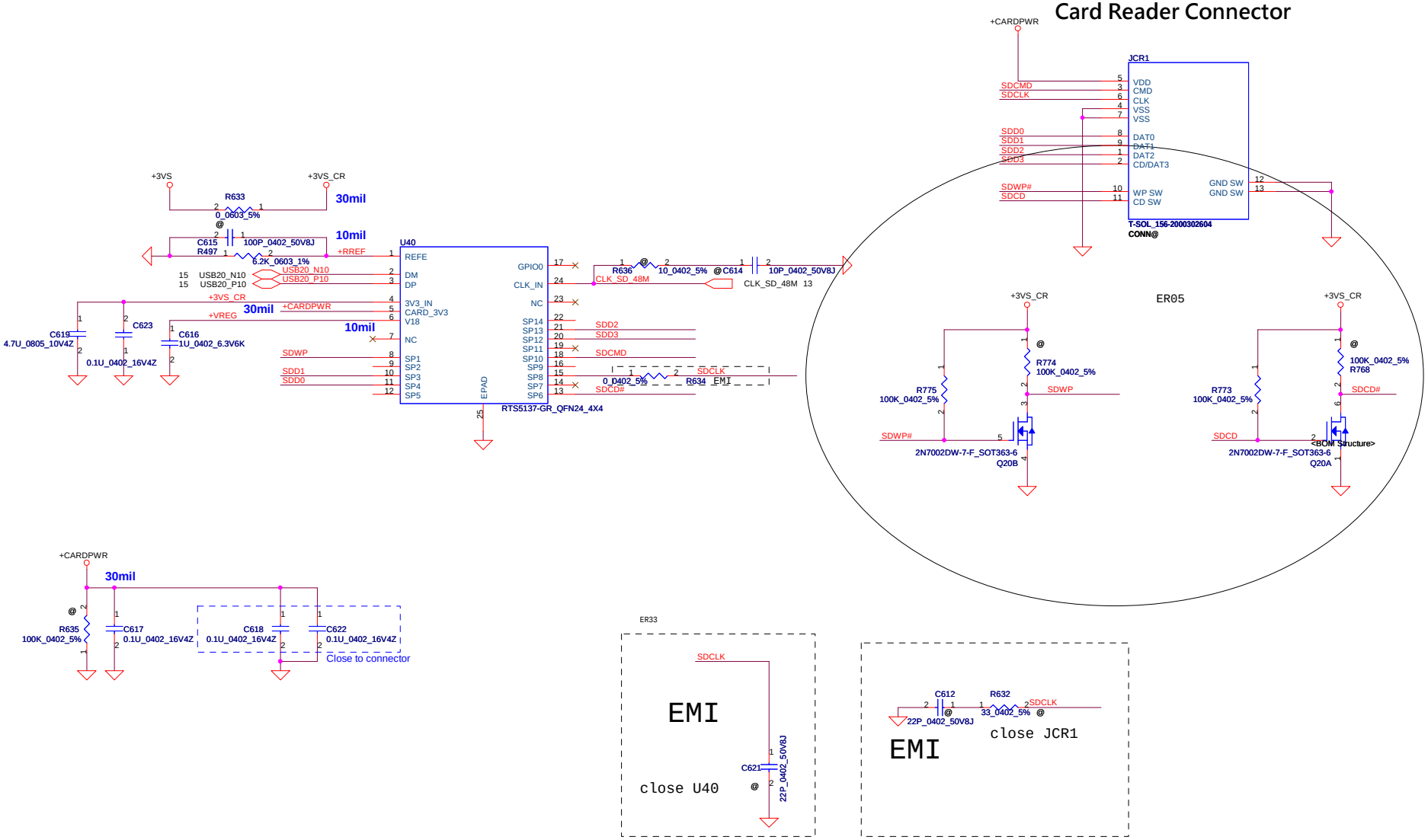

Security Classification	Compal Secret Data		
Issued Date	2011/07/12	Deciphered Date	2012/12/31

THIS SHEET OF ENGINEERING DRAWING IS THE PROPRIETARY PROPERTY OF COMPAL ELECTRONICS, INC. AND CONTAINS CONFIDENTIAL AND TRADE SECRET INFORMATION. THIS SHEET MAY NOT BE TRANSFERED FROM THE CUSTODY OF THE COMPETENT DIVISION OF R&D DEPARTMENT EXCEPT AS AUTHORIZED BY COMPAL ELECTRONICS, INC. NEITHER THIS SHEET NOR THE INFORMATION IT CONTAINS MAY BE USED BY OR DISCLOSED TO ANY THIRD PARTY WITHOUT PRIOR WRITTEN CONSENT OF COMPAL ELECTRONICS, INC.

Compal Electronics, Inc.

Title: RTS5137 Media Card Controller

Size: Custom | Document Number: LA-8224P | Rev: 0.2

Date: Thursday, October 27, 2011 | Sheet 34 of 59

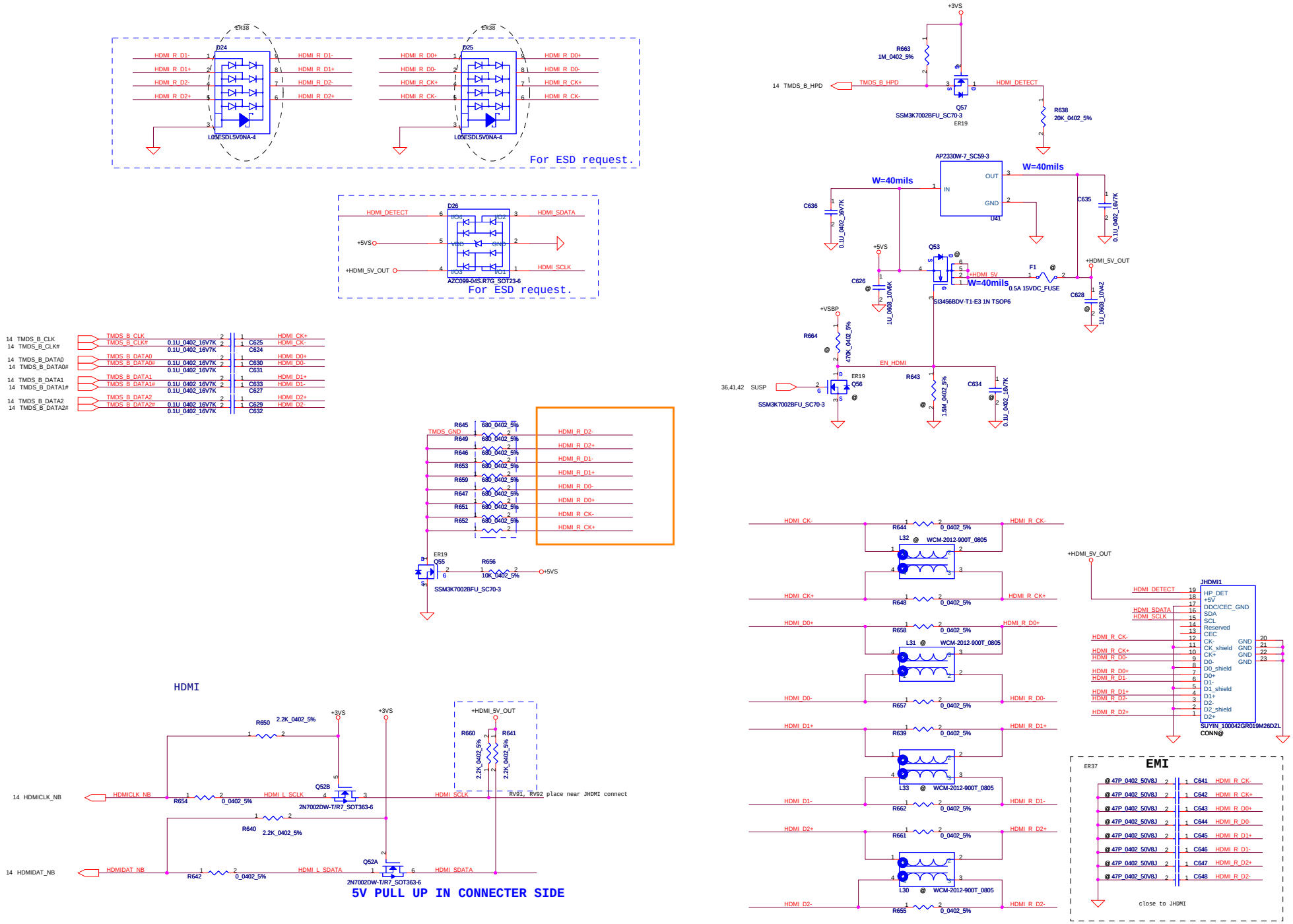

Security Classification	Compal Secret Data		
Issued Date	2011/07/12	Deciphered Date	2012/12/31

THIS SHEET OF ENGINEERING DRAWING IS THE PROPRIETARY PROPERTY OF COMPAL ELECTRONICS, INC. AND CONTAINS CONFIDENTIAL AND TRADE SECRET INFORMATION. THIS SHEET MAY NOT BE TRANSFERED FROM THE CUSTODY OF THE COMPETENT DIVISION OF R&D DEPARTMENT EXCEPT AS AUTHORIZED BY COMPAL ELECTRONICS, INC. NEITHER THIS SHEET NOR THE INFORMATION IT CONTAINS MAY BE USED BY OR DISCLOSED TO ANY THIRD PARTY WITHOUT PRIOR WRITTEN CONSENT OF COMPAL ELECTRONICS, INC.

Compal Electronics, Inc.

Title: HDMI Connector

Size: C | Document Number: LA-8224P | Rev: 0.2

Date: Thursday, October 27, 2011 | Sheet 35 of 59

	S3	S4/S5
+3V_PCH	V	X
+3VS	X	X
+1.2VUSB	V	X
+1.2VS	X	X

For WAKE Function

USB_PEPWRDET

	R1034	R1022
S1	Mount	@
* S3	@	Mount

USB_PESEL

	R1033
* Other applaction	@
Express Card/Mini Card	Mount

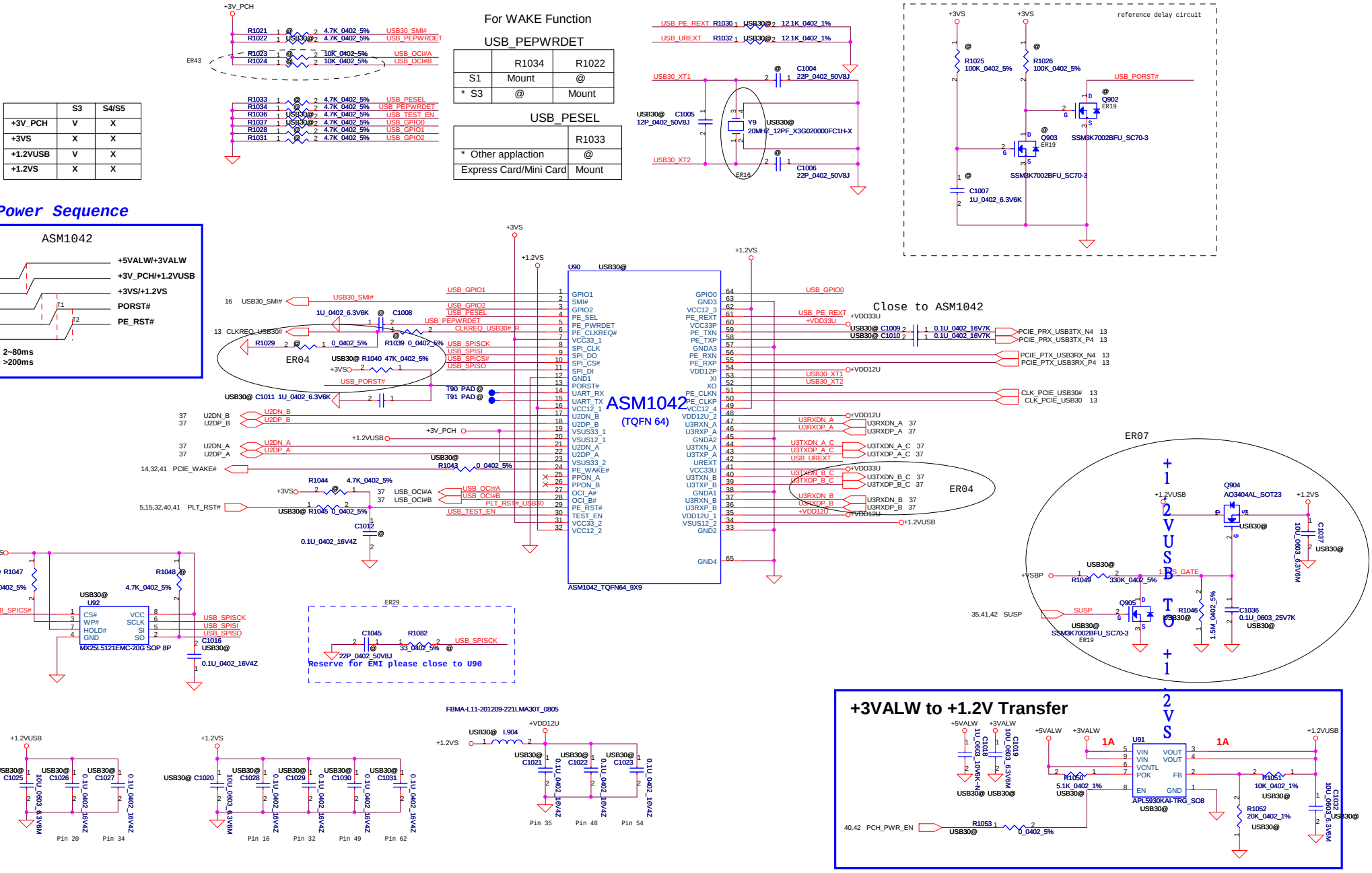

Security Classification	Compal Secret Data		
Issued Date	2010/10/1	Deciphered Date	2012/06/30

THIS SHEET OF ENGINEERING DRAWING IS THE PROPRIETARY PROPERTY OF COMPAL ELECTRONICS, INC. AND CONTAINS CONFIDENTIAL AND TRADE SECRET INFORMATION. THIS SHEET MAY NOT BE TRANSFERED FROM THE CUSTODY OF THE COMPETENT DIVISION OF R&D DEPARTMENT EXCEPT AS AUTHORIZED BY COMPAL ELECTRONICS, INC. NEITHER THIS SHEET NOR THE INFORMATION IT CONTAINS MAY BE USED BY OR DISCLOSED TO ANY THIRD PARTY WITHOUT PRIOR WRITTEN CONSENT OF COMPAL ELECTRONICS, INC.

Compal Electronics, Inc.

Title: USB3.0 controller

Size: Custom | Document Number: LA-8224P | Rev: 0.2

Date: Thursday, October 27, 2011 | Sheet 36 of 59

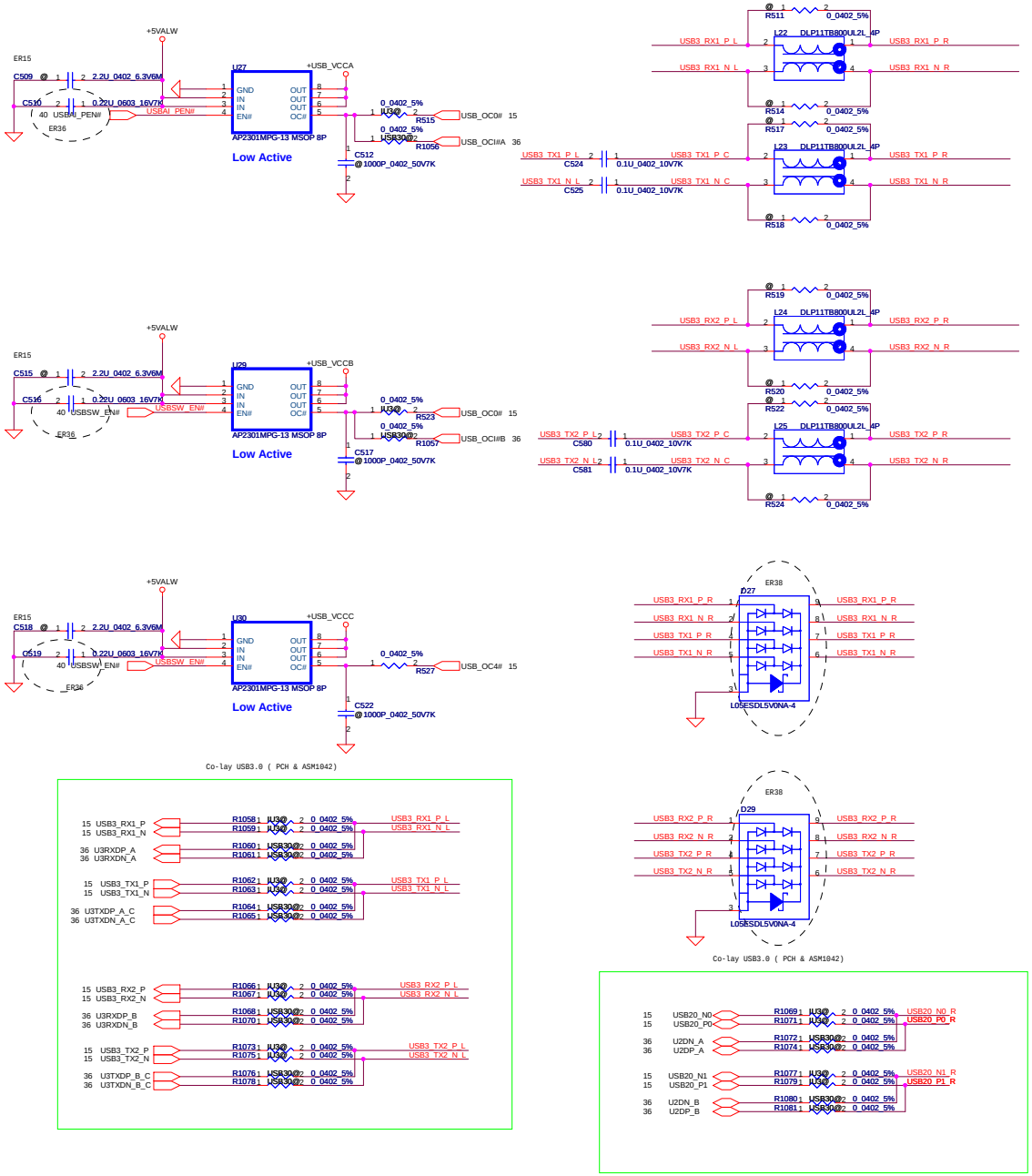

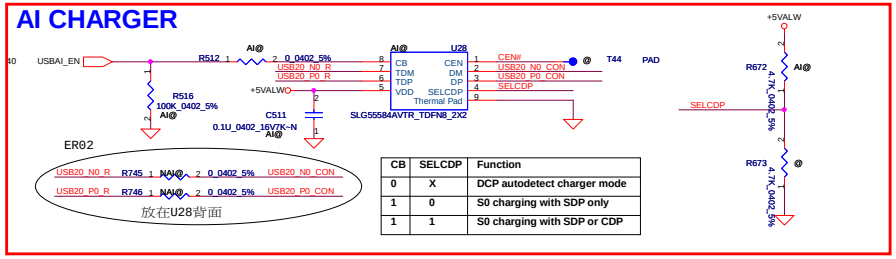

CB	SELCDP	Function
0	X	DCP autodetect charger mode
1	0	S0 charging with SDP only
1	1	S0 charging with SDP or CDP

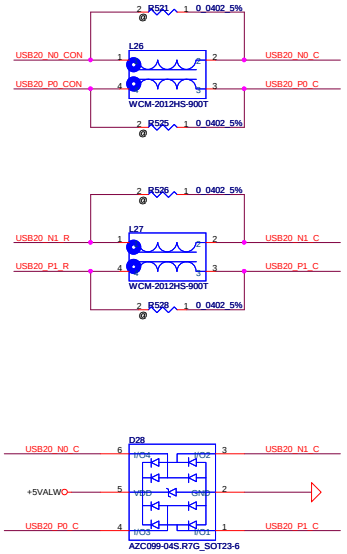

charger port: left side & near user

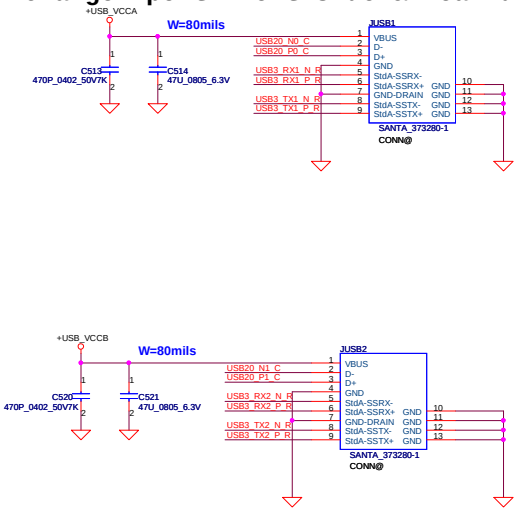

Security Classification	Compal Secret Data		
Issued Date	2011/07/12	Deciphered Date	2012/12/31

THIS SHEET OF ENGINEERING DRAWING IS THE PROPRIETARY PROPERTY OF COMPAL ELECTRONICS, INC. AND CONTAINS CONFIDENTIAL AND TRADE SECRET INFORMATION. THIS SHEET MAY NOT BE TRANSFERED FROM THE CUSTODY OF THE COMPETENT DIVISION OF R&D DEPARTMENT EXCEPT AS AUTHORIZED BY COMPAL ELECTRONICS, INC. NEITHER THIS SHEET NOR THE INFORMATION IT CONTAINS MAY BE USED BY OR DISCLOSED TO ANY THIRD PARTY WITHOUT PRIOR WRITTEN CONSENT OF COMPAL ELECTRONICS, INC.

Compal Electronics, Inc.

Title: USB2.0/USB3.0 CONN

Size: Custom | Document Number: LA-8224P | Rev: 0.2

Date: Thursday, October 27, 2011 | Sheet 37 of 59

Power Button

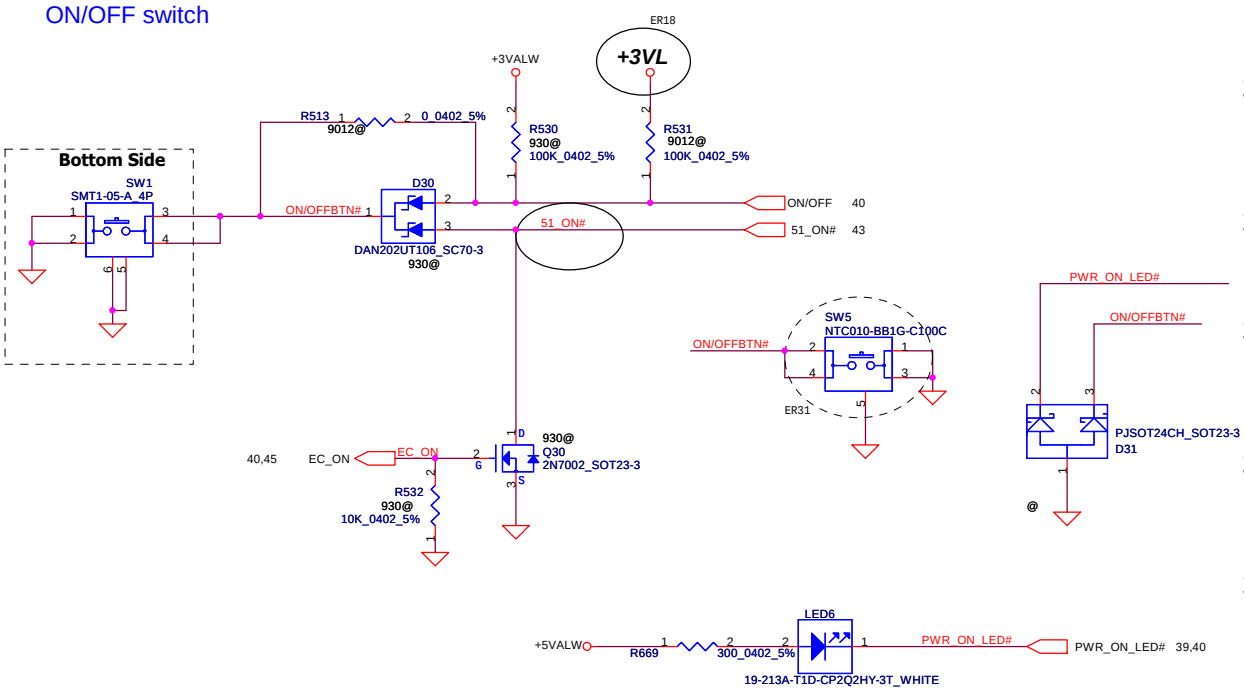

Screw Hole

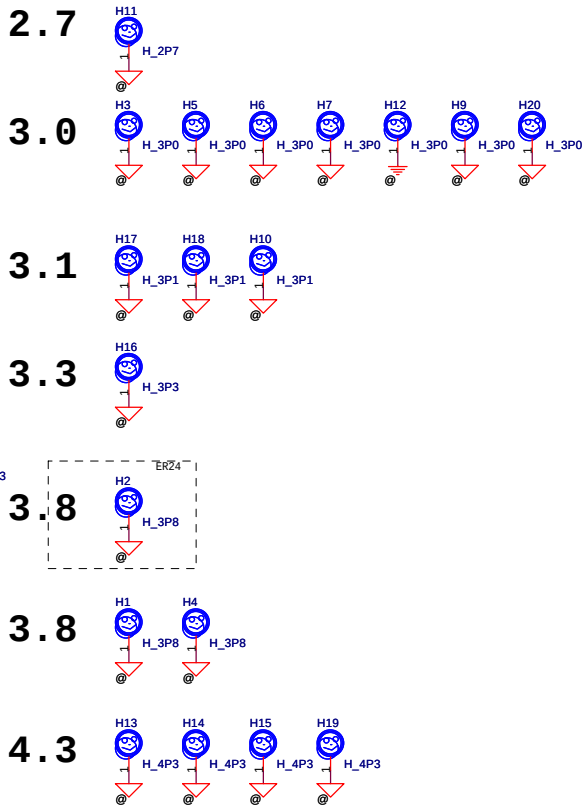

Fan Control Circuit

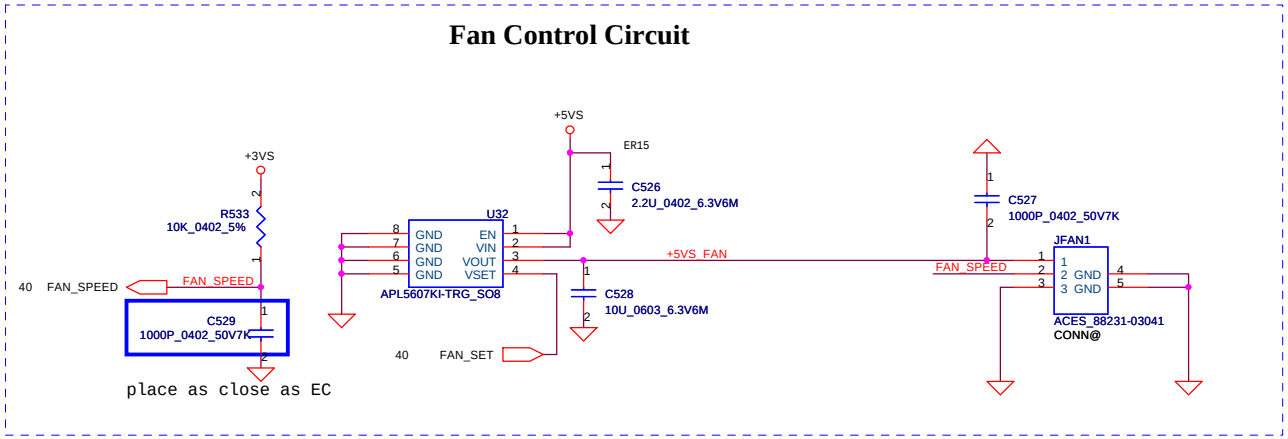

Security Classification	Compal Secret Data		
Issued Date	2011/07/12	Deciphered Date	2012/12/31

THIS SHEET OF ENGINEERING DRAWING IS THE PROPRIETARY PROPERTY OF COMPAL ELECTRONICS, INC. AND CONTAINS CONFIDENTIAL AND TRADE SECRET INFORMATION. THIS SHEET MAY NOT BE TRANSFERED FROM THE CUSTODY OF THE COMPETENT DIVISION OF R&D DEPARTMENT EXCEPT AS AUTHORIZED BY COMPAL ELECTRONICS, INC. NEITHER THIS SHEET NOR THE INFORMATION IT CONTAINS MAY BE USED BY OR DISCLOSED TO ANY THIRD PARTY WITHOUT PRIOR WRITTEN CONSENT OF COMPAL ELECTRONICS, INC.

Compal Electronics, Inc.

Title: **PWRBTN/ FAN / Screws**

Size: Custom | Document Number: **LA-8224P** | Rev: 0.2

Date: Thursday, October 27, 2011 | Sheet 38 of 59

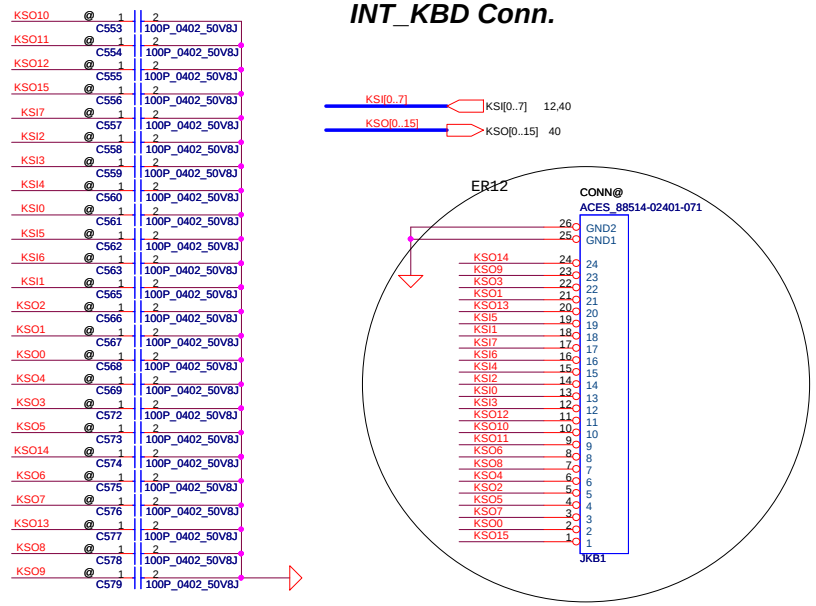

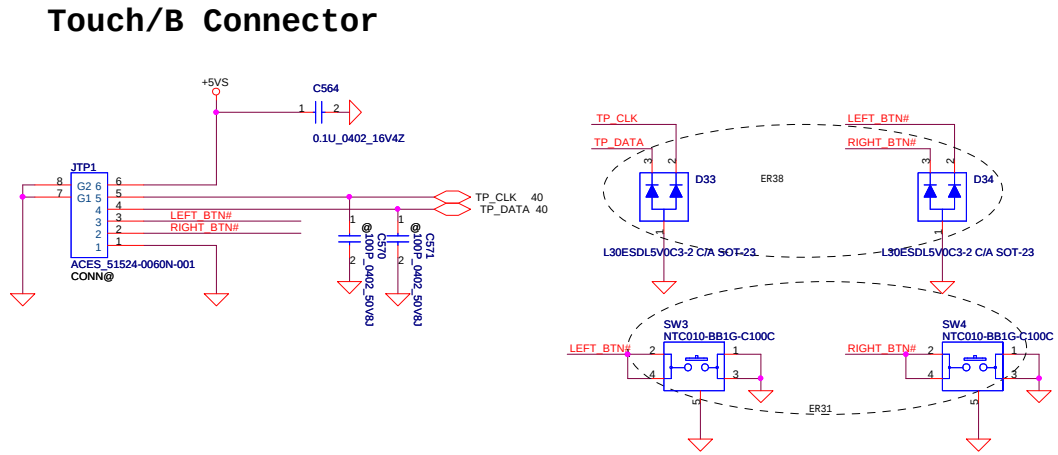

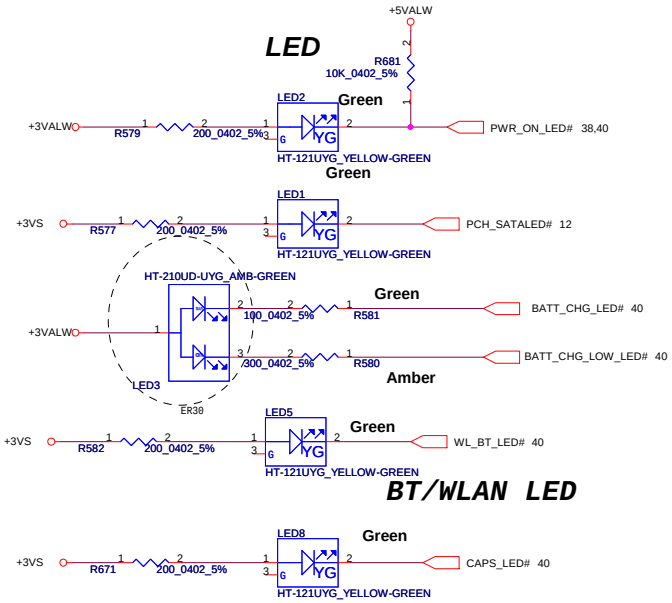

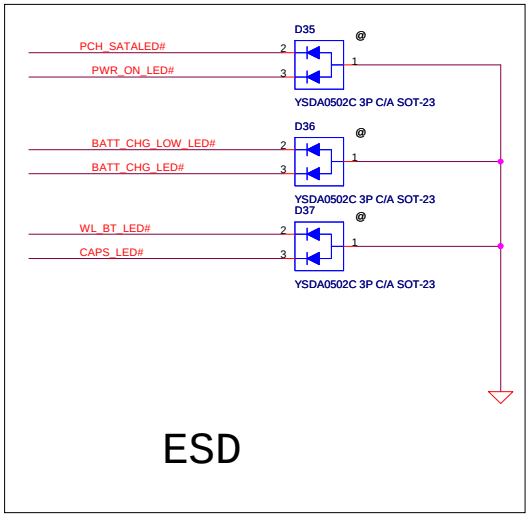

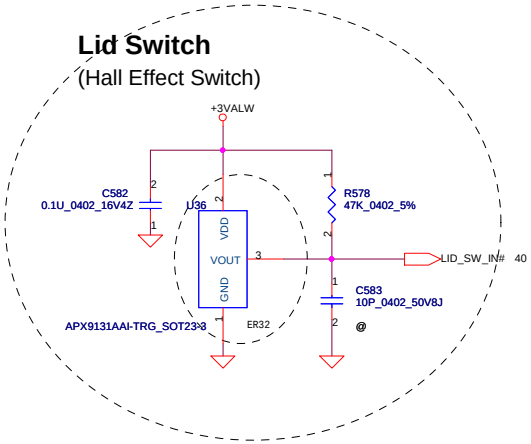

Security Classification	Compal Secret Data		
Issued Date	2011/07/12	Deciphered Date	2012/12/31

THIS SHEET OF ENGINEERING DRAWING IS THE PROPRIETARY PROPERTY OF COMPAL ELECTRONICS, INC. AND CONTAINS CONFIDENTIAL AND TRADE SECRET INFORMATION. THIS SHEET MAY NOT BE TRANSFERED FROM THE CUSTODY OF THE COMPETENT DIVISION OF R&D DEPARTMENT EXCEPT AS AUTHORIZED BY COMPAL ELECTRONICS, INC. NEITHER THIS SHEET NOR THE INFORMATION IT CONTAINS MAY BE USED BY OR DISCLOSED TO ANY THIRD PARTY WITHOUT PRIOR WRITTEN CONSENT OF COMPAL ELECTRONICS, INC.

Compal Electronics, Inc.

Title: KB/EC ROM/TP/FUN/LED

Size: B | Document Number: LA-8224P | Rev: 0.2

Date: Thursday, October 27, 2011 | Sheet 39 of 59

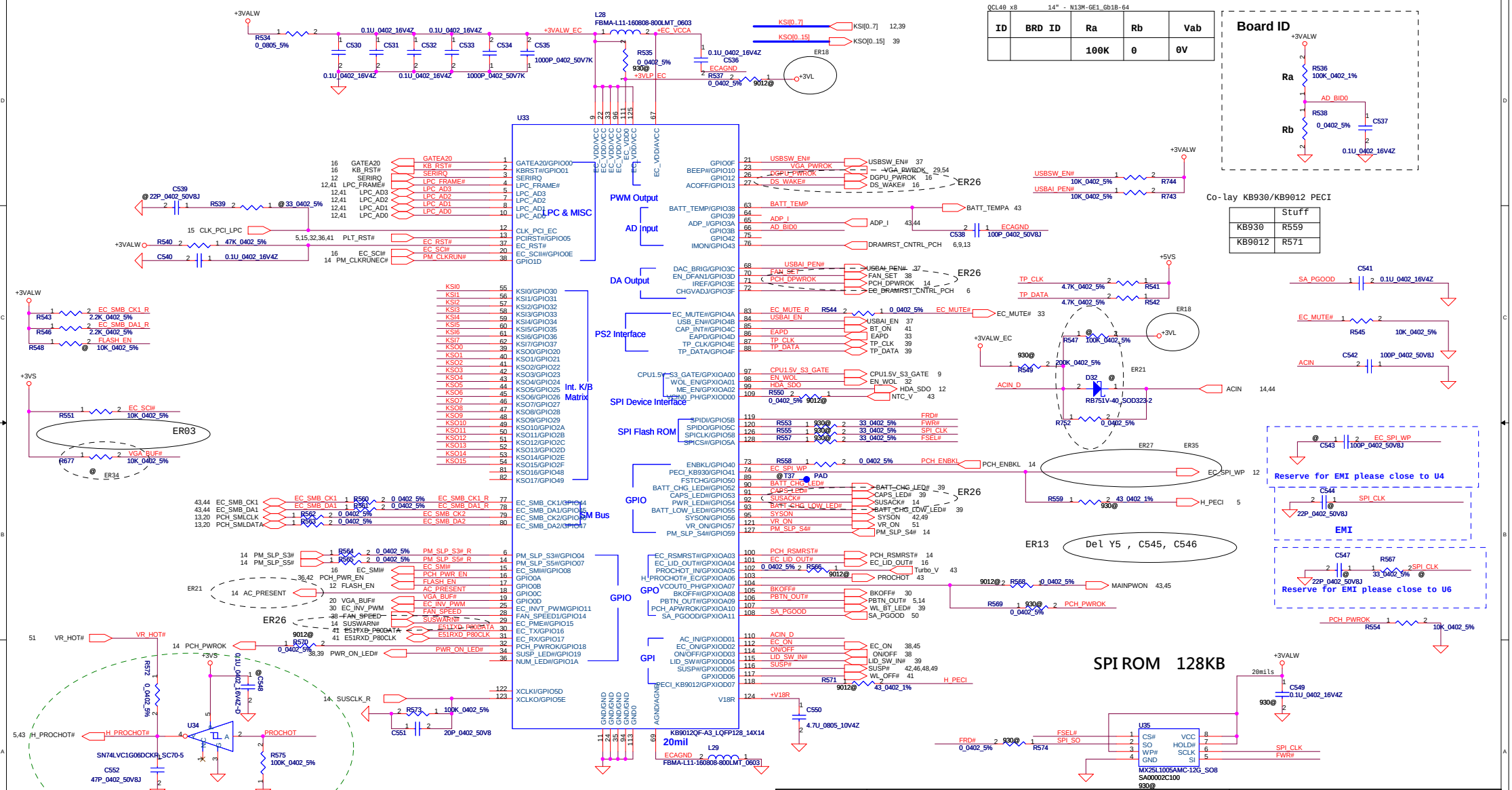
U33
KB9012QF-A3_LQFP128_14X14
20mil
PWM Output
AD Input
DA Output
PS2 Interface
SPI Device Interface
SPI Flash ROM
GPIO
SM Bus
GPO
GPI
LPC & MISC
Int. K/B Matrix
ER26
ER03
ER18
ER21
ER27
ER35
ER13
Del Y5 , C545, C546
Reserve for EMI please close to U4
EMI
Reserve for EMI please close to U6
Close to IMVP7
SN74LVC1G06DCKR_SC70-5
U34
U35
MX25L1005AMC-12G_SO8
SA00002C100
930@
SPI ROM 128KB
Board ID
Ra
Rb
AD_BID0
Co-lay KB930/KB9012 PECI
Stuff
KB930 R559
KB9012 R571
QCL40 x8 14" - N13M-GE1_Gb1B-64
ID BRD ID Ra Rb Vab
100K 0 0V
L28
FBMA-L11-160808-800LMT_0603
L29
FBMA-L11-160808-800LMT_0603
+3VALW
+3VALW_EC
+EC_VCCA
+3VLP_EC
+3VL
+5VS
+3VS
ECAGND
KSI[0..7]
KSO[0..15]
EC_SMB_CK1
EC_SMB_DA1
EC_SMB_CK2
EC_SMB_DA2
PCH_SMLCLK
PCH_SMLDATA
PM_SLP_S3#
PM_SLP_S5#
PCH_PWROK
VR_HOT#
H_PROCHOT#
PROCHOT
PWR_ON_LED#
SUSCLK_R
H_PECI
MAINPWON
ACIN
EC_SPI_WP
SPI_CLK
FWR#
FSEL#
SPI_SO
Security Classification
Compal Secret Data
Issued Date
2011/07/12
Deciphered Date
2012/12/31
THIS SHEET OF ENGINEERING DRAWING IS THE PROPRIETARY PROPERTY OF COMPAL ELECTRONICS, INC. AND CONTAINS CONFIDENTIAL AND TRADE SECRET INFORMATION. THIS SHEET MAY NOT BE TRANSFERRED FROM THE CUSTODY OF THE COMPETENT DIVISION OF R&D DEPARTMENT EXCEPT AS AUTHORIZED BY COMPAL ELECTRONICS, INC. NEITHER THIS SHEET NOR THE INFORMATION IT CONTAINS MAY BE USED BY OR DISCLOSED TO ANY THIRD PARTY WITHOUT PRIOR WRITTEN CONSENT OF COMPAL ELECTRONICS, INC.
Compal Electronics, Inc.
Title
EC ENE-KB930/Co-lay 9012
Size Custom
Document Number
LA-8224P
Rev 0.2
Date: Thursday, October 27, 2011
Sheet 40 of 59

WLAN/BT combo

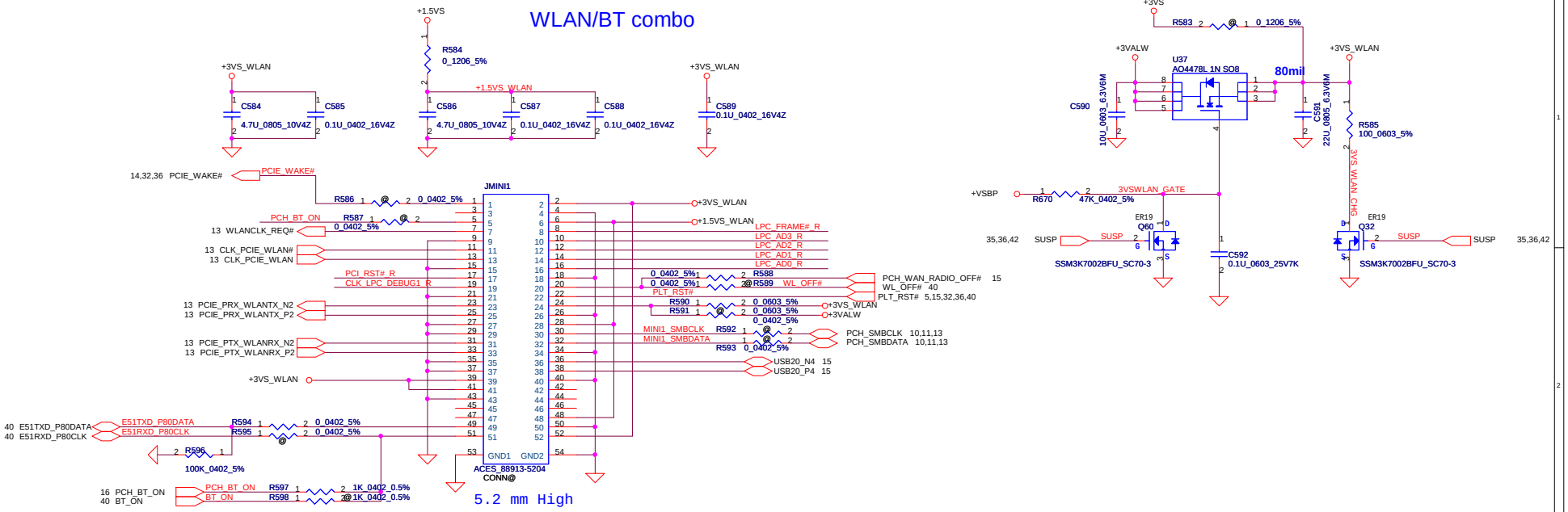

Reserve for SW mini-pcie debug card.
Series resistors closed to KBC side.

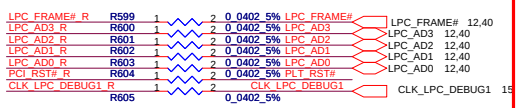

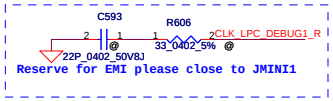

Security Classification	Compal Secret Data		
Issued Date	2011/07/12	Deciphered Date	2012/12/31

THIS SHEET OF ENGINEERING DRAWING IS THE PROPRIETARY PROPERTY OF COMPAL ELECTRONICS, INC. AND CONTAINS CONFIDENTIAL AND TRADE SECRET INFORMATION. THIS SHEET MAY NOT BE TRANSFERED FROM THE CUSTODY OF THE COMPETENT DIVISION OF R&D DEPARTMENT EXCEPT AS AUTHORIZED BY COMPAL ELECTRONICS, INC. NEITHER THIS SHEET NOR THE INFORMATION IT CONTAINS MAY BE USED BY OR DISCLOSED TO ANY THIRD PARTY WITHOUT PRIOR WRITTEN CONSENT OF COMPAL ELECTRONICS, INC.

Compal Electronics, Inc.

Title: **WLAN/ WWAN/ m-SATA**

Size: Custom | Document Number: **LA-8224P** | Rev: 0.2

Date: Thursday, October 27, 2011 | Sheet 41 of 59

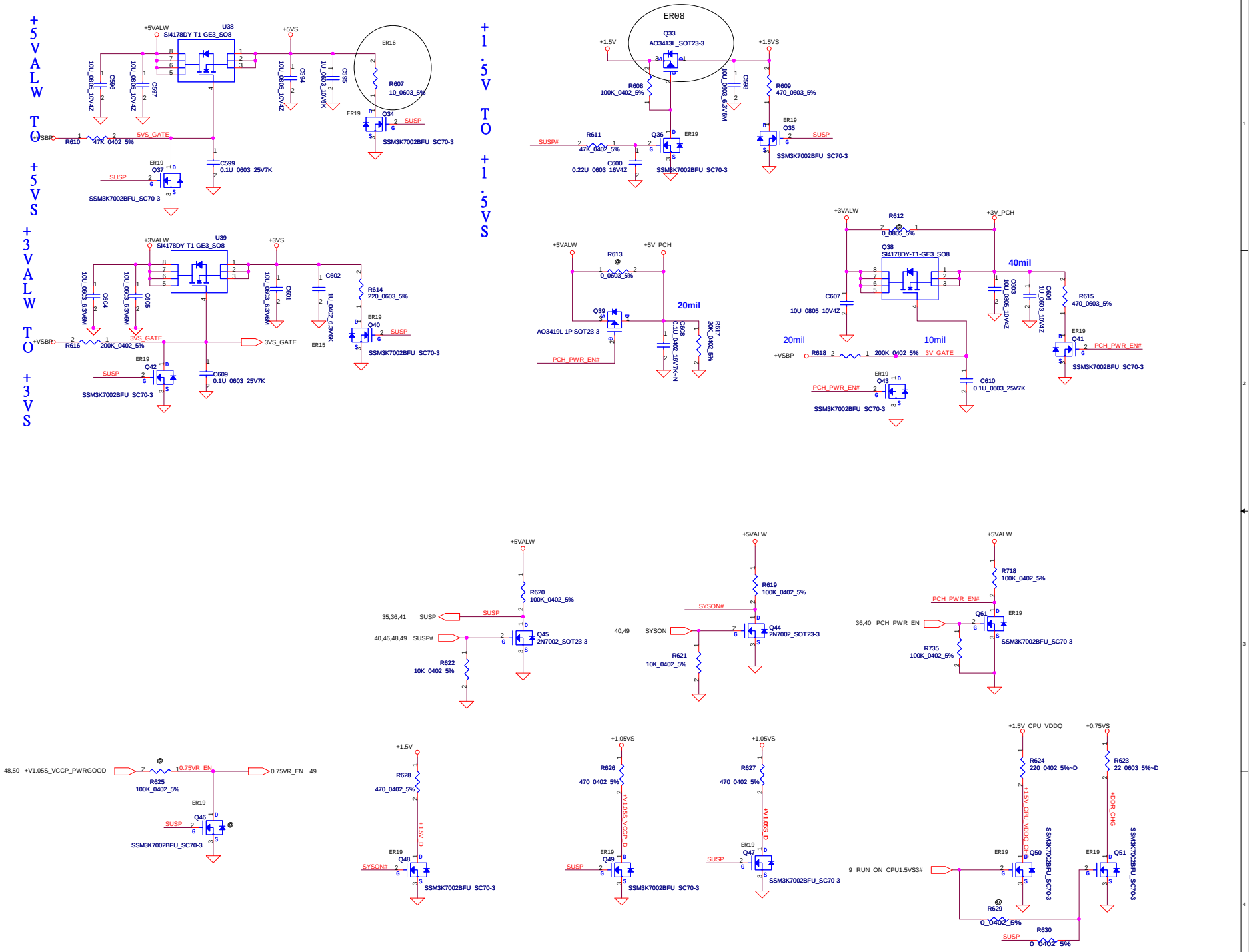

Security Classification	Compal Secret Data		
Issued Date	2011/07/12	Deciphered Date	2012/12/31

THIS SHEET OF ENGINEERING DRAWING IS THE PROPRIETARY PROPERTY OF COMPAL ELECTRONICS, INC. AND CONTAINS CONFIDENTIAL AND TRADE SECRET INFORMATION. THIS SHEET MAY NOT BE TRANSFERED FROM THE CUSTODY OF THE COMPETENT DIVISION OF R&D DEPARTMENT EXCEPT AS AUTHORIZED BY COMPAL ELECTRONICS, INC. NEITHER THIS SHEET NOR THE INFORMATION IT CONTAINS MAY BE USED BY OR DISCLOSED TO ANY THIRD PARTY WITHOUT PRIOR WRITTEN CONSENT OF COMPAL ELECTRONICS, INC.

Compal Electronics, Inc.

Title: DC/DC Interface

Size: Custom | Document Number: LA-8224P | Rev: 0.2

Date: Thursday, October 27, 2011 | Sheet 42 of 59

DCIN jack P/N:DC301008L00,
need doble confirm P/N with ME

PJPDC1
GND_1
GND_2
GND_3
GND_4
V-
V+
V-
@SINGA_SDC2003-004111F

ADPIN
PL1 HCB2012KF-121T50_0805
PL2 HCB2012KF-121T50_0805
PC1 1000P_0402_50V7K
PC2 100P_0402_50V8J
PC3 1000P_0402_50V7K
PC5 100P_0402_50V8J
VIN

PH1 under CPU botten side :
CPU thermal protection at 93 +-3 degree C
Recovery at 56 +-3 degree C

For KB930 --> Keep PU1 circuit
(Vth = 0.825V)
For KB9012 (Red square) --> Remove PU1 circuit, but keep PR56
PH1, PR2, PQ1, PR7,PQ15,PR73,PR56

VL
PC4 @0.1U_0603_16V7K
+3VS
PR5 @100K_0402_1%
5,40 H_PROCHOT#
PQ1 @SSM3K7002FU_SC70-3
ADP_OCP_1
PR73 @0_0402_5%
40 PROCHOT
OTP_N_003
PR9 @0_0402_5%
MAINPWON 40,45
PU1
VCC TMSNS1
GND RHYST1
OT1 TMSNS2
OT2 RHYST2
@G718TM1U_SOT23-8
OTP_N_002
ADP_OCP_2
PR6 @29.4K_0402_1%
40,44 ADP_I
PR2 1K_0402_1%
Turbo_V
PR7 20K_0402_1%
NTC_V
+3VL
PR56 12.1K_0402_1%
PR3 @21.5K_0402_1%
PR4 @10K_0402_1%
PH1 100K_0402_1%_NCP15WF104F03RC
40

PJP2
GND
GND
@SUYIN_200045GR009G28DZR
EC_SMCA
EC_SMDA
TS_A
PD1 @PJSOT24CW_SOT323-3
PR27 1K_0402_1%
VMB
PL3 HCB2012KF-121T50_0805
PL4 HCB2012KF-121T50_0805
PC6 1000P_0402_50V7K
PC128 10U_0805_25V6K
PC7 0.01U_0402_25V7K
BATT+
PD2 @PJSOT24CW_SOT323-3
PR28 100_0402_1%
PR31 100_0402_1%
EC_SMB_CK1 40,44
EC_SMB_DA1 40,44
PR29 100K_0402_5%
+3VALW
PR30 1K_0402_1%
BATT_TEMPA 40

B+
VL
PR16 100K_0402_1%
PR18 0_0402_5%
45 POK
VSB_N_002
PC10 .1U_0402_16V7K
PR14 22K_0402_1%
VSB_N_001
VSB_N_003
PQ4 SSM3K7002FU_SC70-3
PR13 100K_0402_1%
PC8 0.22U_0603_25V7K
PQ3 TP0610K-T1-E3_SOT23-3
PC9 0.1U_0603_25V7K
+VSBP

+3VL
+CHGRTC
PJ3 JUMP_43X39

RTC Battery
PBJ1
-
+
@LOTES_AAA-BAT-054-K01
+RTCBATT

VIN
PD3 RLS4148_LL34-2
VS_N_001
BATT+
PD4 LL4148_LL34-2
PQ5 TP0610K-T1-E3_SOT23-3
PR19 68_1206_5%
PR20 68_1206_5%
N1
VS
PR23 100K_0402_1%
PC11 0.22U_0603_25V7K
PC12 0.1U_0603_25V7K
38 51_ON#
PR24 22K_0402_1%
VS_N_002

For KB9012 --> Remove all 51_ON# circuit

Security Classification	Compal Secret Data		
Issued Date	2009/01/23	Deciphered Date	2010/01/23

THIS SHEET OF ENGINEERING DRAWING IS THE PROPRIETARY PROPERTY OF COMPAL ELECTRONICS, INC. AND CONTAINS CONFIDENTIAL AND TRADE SECRET INFORMATION. THIS SHEET MAY NOT BE TRANSFERRED FROM THE CUSTODY OF THE COMPETENT DIVISION OF R&D DEPARTMENT EXCEPT AS AUTHORIZED BY COMPAL ELECTRONICS, INC. NEITHER THIS SHEET NOR THE INFORMATION IT CONTAINS MAY BE USED BY OR DISCLOSED TO ANY THIRD PARTY WITHOUT PRIOR WRITTEN CONSENT OF COMPAL ELECTRONICS, INC.

Compal Electronics, Inc.

Title: PWR-DCIN / BATT CONN / OTP

Size | Document Number: PBL22 LA-7391P M/B | Rev: 0.2

Date: Thursday, October 27, 2011 | Sheet 43 of 59

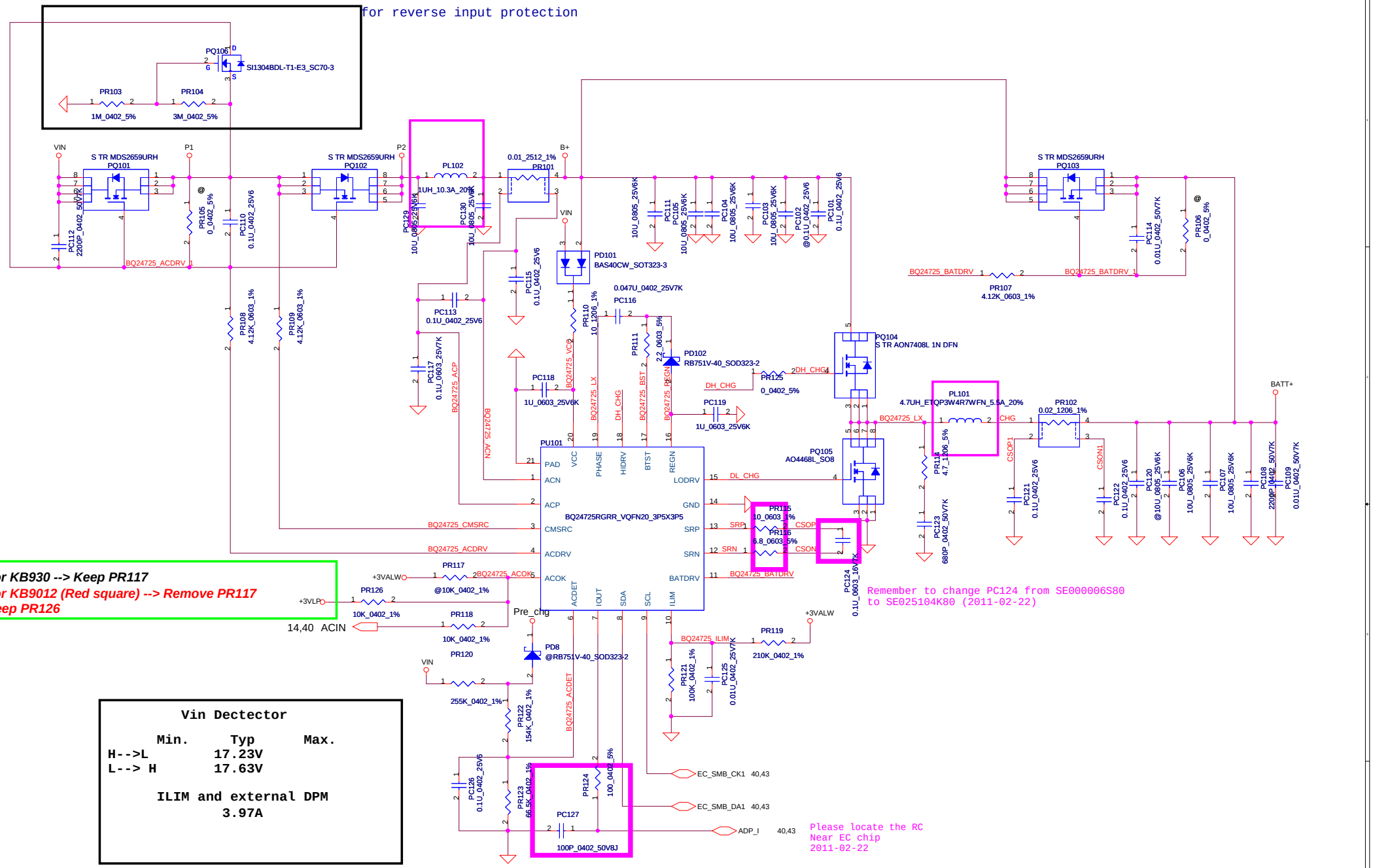

Security Classification	Compal Secret Data		
Issued Date	2009/01/23	Deciphered Date	2010/01/23

THIS SHEET OF ENGINEERING DRAWING IS THE PROPRIETARY PROPERTY OF COMPAL ELECTRONICS, INC. AND CONTAINS CONFIDENTIAL AND TRADE SECRET INFORMATION. THIS SHEET MAY NOT BE TRANSFERED FROM THE CUSTODY OF THE COMPETENT DIVISION OF R&D DEPARTMENT EXCEPT AS AUTHORIZED BY COMPAL ELECTRONICS, INC. NEITHER THIS SHEET NOR THE INFORMATION IT CONTAINS MAY BE USED BY OR DISCLOSED TO ANY THIRD PARTY WITHOUT PRIOR WRITTEN CONSENT OF COMPAL ELECTRONICS, INC.

Compal Electronics, Inc.

Title: **PWR-CHARGER**

Size | Document Number: PBL22 LA-7391P M/B | Rev: 0.2

Date: Thursday, October 27, 2011 | Sheet 44 of 59

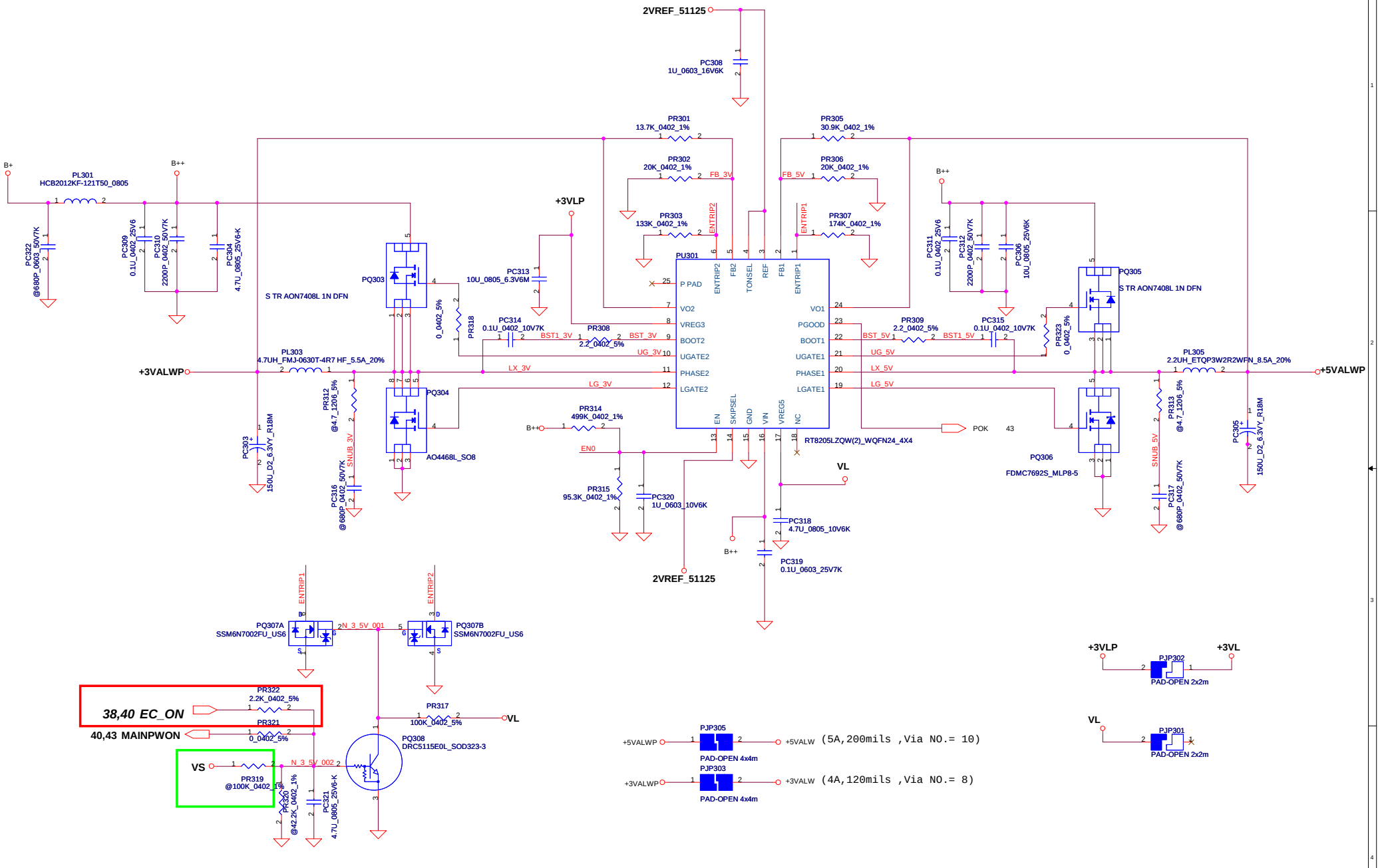

For KB930 --> Keep PR319, Remove PR322
For KB9012 (Red square) --> Remove PR319
Keep PR322

Security Classification	Compal Secret Data		
Issued Date	2007/08/02	Deciphered Date	2008/08/02

THIS SHEET OF ENGINEERING DRAWING IS THE PROPRIETARY PROPERTY OF COMPAL ELECTRONICS, INC. AND CONTAINS CONFIDENTIAL AND TRADE SECRET INFORMATION. THIS SHEET MAY NOT BE TRANSFERED FROM THE CUSTODY OF THE COMPETENT DIVISION OF R&D DEPARTMENT EXCEPT AS AUTHORIZED BY COMPAL ELECTRONICS, INC. NEITHER THIS SHEET NOR THE INFORMATION IT CONTAINS MAY BE USED BY OR DISCLOSED TO ANY THIRD PARTY WITHOUT PRIOR WRITTEN CONSENT OF COMPAL ELECTRONICS, INC.

Compal Electronics, Inc.

Title: **PWR-3.3VALWP/5VALWP**

Size: Custom | Document Number: LA-8224P | Rev: 0.2

Date: Thursday, October 27, 2011 | Sheet 45 of 59

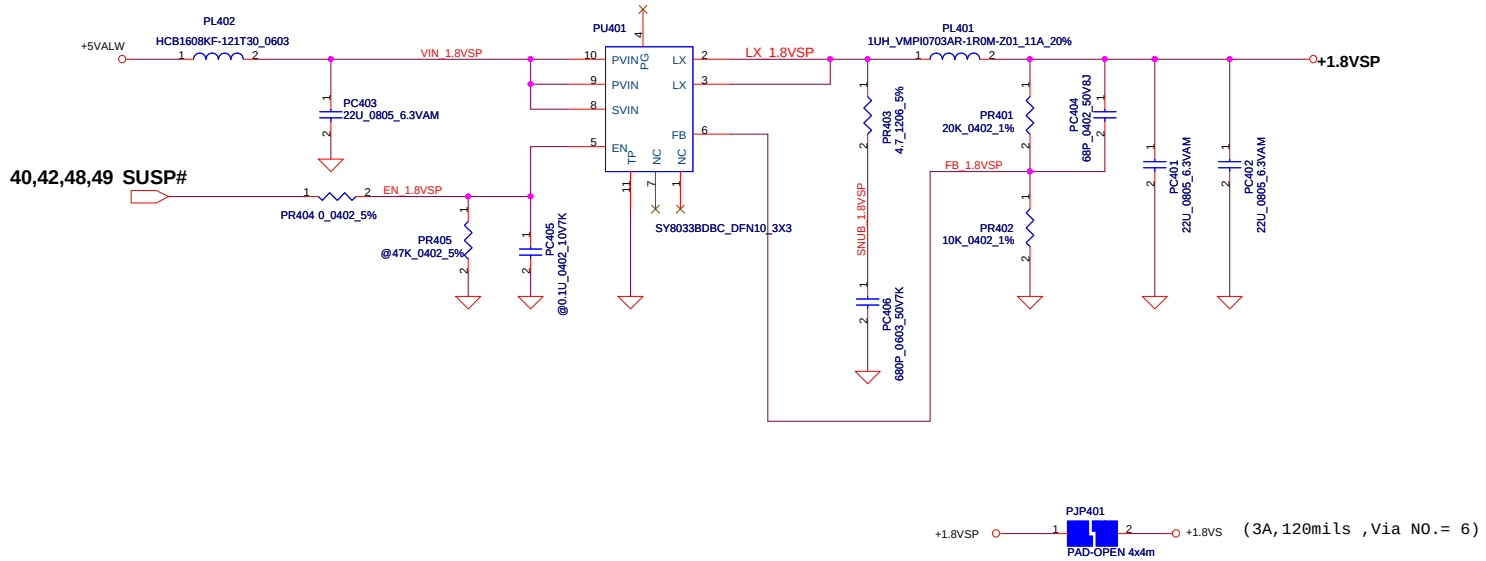

Security Classification	Compal Secret Data		
Issued Date	2009/01/23	Deciphered Date	2012/12/31

THIS SHEET OF ENGINEERING DRAWING IS THE PROPRIETARY PROPERTY OF COMPAL ELECTRONICS, INC. AND CONTAINS CONFIDENTIAL AND TRADE SECRET INFORMATION. THIS SHEET MAY NOT BE TRANSFERED FROM THE CUSTODY OF THE COMPETENT DIVISION OF R&D DEPARTMENT EXCEPT AS AUTHORIZED BY COMPAL ELECTRONICS, INC. NEITHER THIS SHEET NOR THE INFORMATION IT CONTAINS MAY BE USED BY OR DISCLOSED TO ANY THIRD PARTY WITHOUT PRIOR WRITTEN CONSENT OF COMPAL ELECTRONICS, INC.

Compal Electronics, Inc.

Title: **PWR-1.8VSP**

Size | Document Number: *PBL22 LA-7391P M/B* | Rev: 0.2

Date: Thursday, October 27, 2011 | Sheet 46 of 59

(8.5A,360mils ,Via NO.= 17)

PJP606,PJP607先斷開,確定拿掉PU605再接上

Security Classification	Compal Secret Data		
Issued Date	2010/07/20	Deciphered Date	2012/12/31

THIS SHEET OF ENGINEERING DRAWING IS THE PROPRIETARY PROPERTY OF COMPAL ELECTRONICS, INC. AND CONTAINS CONFIDENTIAL AND TRADE SECRET INFORMATION. THIS SHEET MAY NOT BE TRANSFERED FROM THE CUSTODY OF THE COMPETENT DIVISION OF R&D DEPARTMENT EXCEPT AS AUTHORIZED BY COMPAL ELECTRONICS, INC. NEITHER THIS SHEET NOR THE INFORMATION IT CONTAINS MAY BE USED BY OR DISCLOSED TO ANY THIRD PARTY WITHOUT PRIOR WRITTEN CONSENT OF COMPAL ELECTRONICS, INC.

Compal Electronics, Inc.

Title: **PWR-V1.05S_VCCP**

Size: Custom | Document Number: PBL22 LA-7391P M/B | Rev: 0.2

Date: Thursday, October 27, 2011 | Sheet 47 of 59

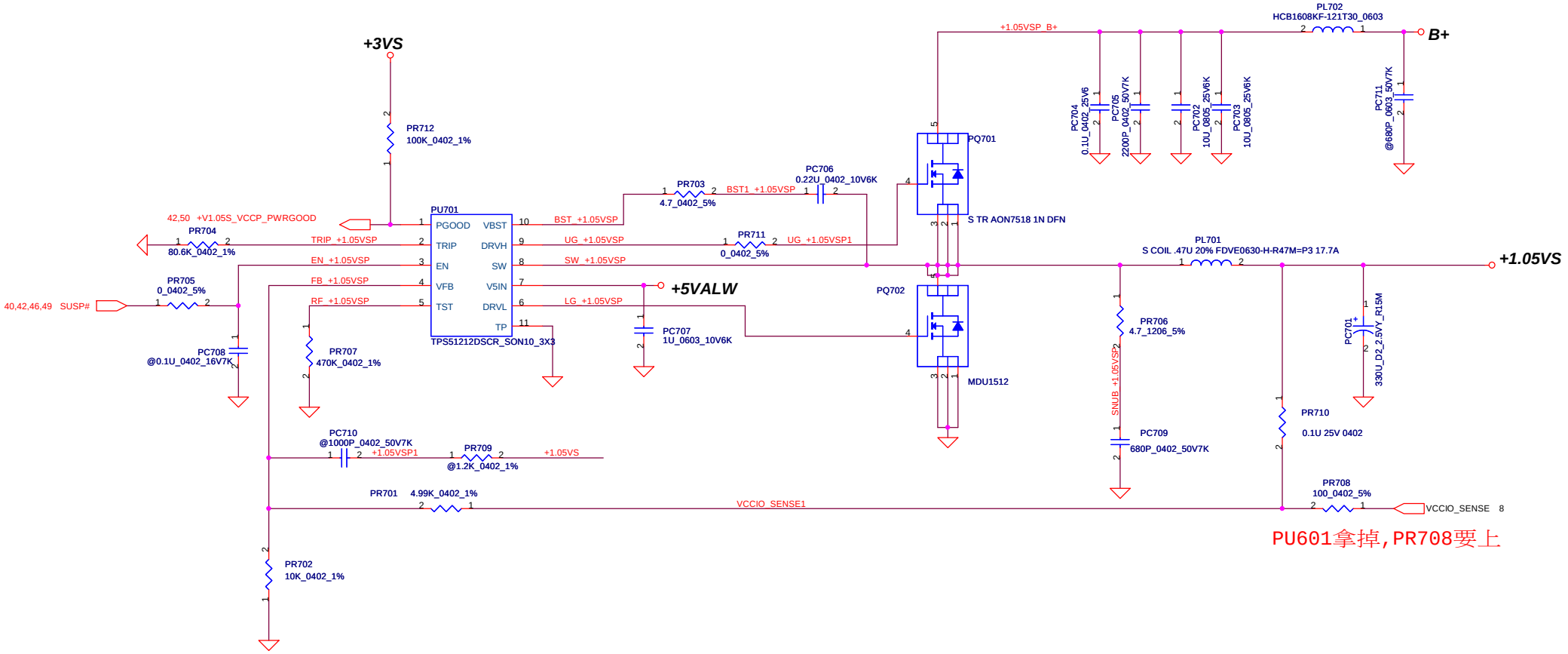

PU601拿掉,PR708要上

(12A,480mils ,Via NO.= 24)

Security Classification	Compal Secret Data		
Issued Date	2010/07/20	Deciphered Date	2012/12/31

THIS SHEET OF ENGINEERING DRAWING IS THE PROPRIETARY PROPERTY OF COMPAL ELECTRONICS, INC. AND CONTAINS CONFIDENTIAL AND TRADE SECRET INFORMATION. THIS SHEET MAY NOT BE TRANSFERED FROM THE CUSTODY OF THE COMPETENT DIVISION OF R&D DEPARTMENT EXCEPT AS AUTHORIZED BY COMPAL ELECTRONICS, INC. NEITHER THIS SHEET NOR THE INFORMATION IT CONTAINS MAY BE USED BY OR DISCLOSED TO ANY THIRD PARTY WITHOUT PRIOR WRITTEN CONSENT OF COMPAL ELECTRONICS, INC.

Compal Electronics, Inc.

Title: **PWR-V1.05SP**

Size: Custom | Document Number: PBL22 LA-7391P M/B | Rev: 0.2

Date: Thursday, October 27, 2011 | Sheet 48 of 59

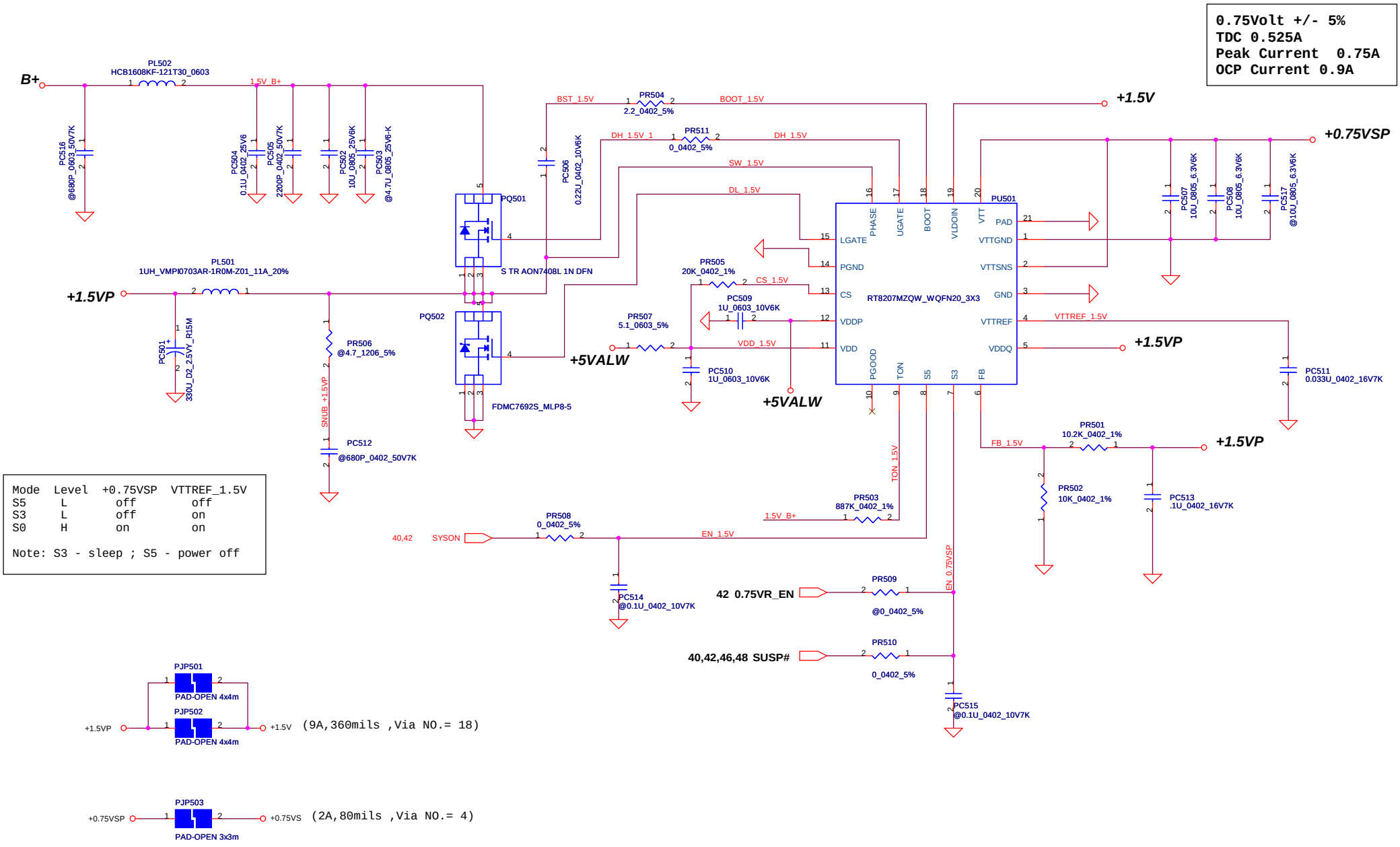

Security Classification	Compal Secret Data		
Issued Date	2010/07/20	Deciphered Date	2012/12/31

THIS SHEET OF ENGINEERING DRAWING IS THE PROPRIETARY PROPERTY OF COMPAL ELECTRONICS, INC. AND CONTAINS CONFIDENTIAL AND TRADE SECRET INFORMATION. THIS SHEET MAY NOT BE TRANSFERED FROM THE CUSTODY OF THE COMPETENT DIVISION OF R&D DEPARTMENT EXCEPT AS AUTHORIZED BY COMPAL ELECTRONICS, INC. NEITHER THIS SHEET NOR THE INFORMATION IT CONTAINS MAY BE USED BY OR DISCLOSED TO ANY THIRD PARTY WITHOUT PRIOR WRITTEN CONSENT OF COMPAL ELECTRONICS, INC.

Compal Electronics, Inc.

Title: **PWR-1.5VP / +0.75VSP**

Size: Custom | Document Number: PBL22 LA-7391P M/B | Rev: 0.2

Date: Thursday, October 27, 2011 | Sheet 49 of 59

The 1k PD on the VCCSA VIDs are empty.
These should be stuffed to ensure that
VCCSA VID is 00 prior to VCCIO stability.

VID [0]	VID[1]	VCCSA Vout
0	0	0.9V
0	1	0.8V
1	0	0.725V
1	1	0.675V

output voltage adjustable network

+VCC_SAP
TDC 4.2A
Peak Current 6A
OCP current 7.2A

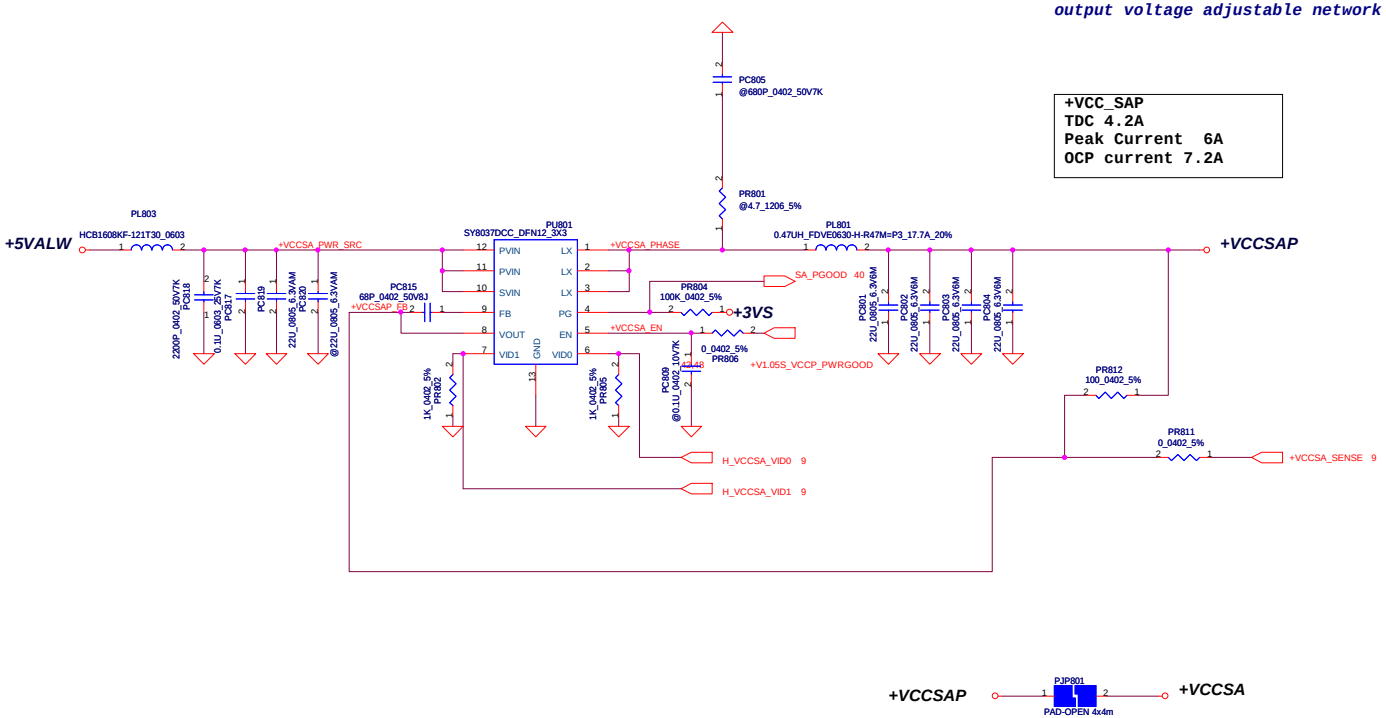

Security Classification	Compal Secret Data		
Issued Date	2010/07/20	Deciphered Date	2012/12/31

THIS SHEET OF ENGINEERING DRAWING IS THE PROPRIETARY PROPERTY OF COMPAL ELECTRONICS, INC. AND CONTAINS CONFIDENTIAL AND TRADE SECRET INFORMATION. THIS SHEET MAY NOT BE TRANSFERED FROM THE CUSTODY OF THE COMPETENT DIVISION OF R&D DEPARTMENT EXCEPT AS AUTHORIZED BY COMPAL ELECTRONICS, INC. NEITHER THIS SHEET NOR THE INFORMATION IT CONTAINS MAY BE USED BY OR DISCLOSED TO ANY THIRD PARTY WITHOUT PRIOR WRITTEN CONSENT OF COMPAL ELECTRONICS, INC.

Compal Electronics, Inc.

Title: PWR-VCC_SAP

Size: C | Document Number: PBL22 LA-7391P M/B | Rev: 0.2

Date: Thursday, October 27, 2011 | Sheet 50 of 59

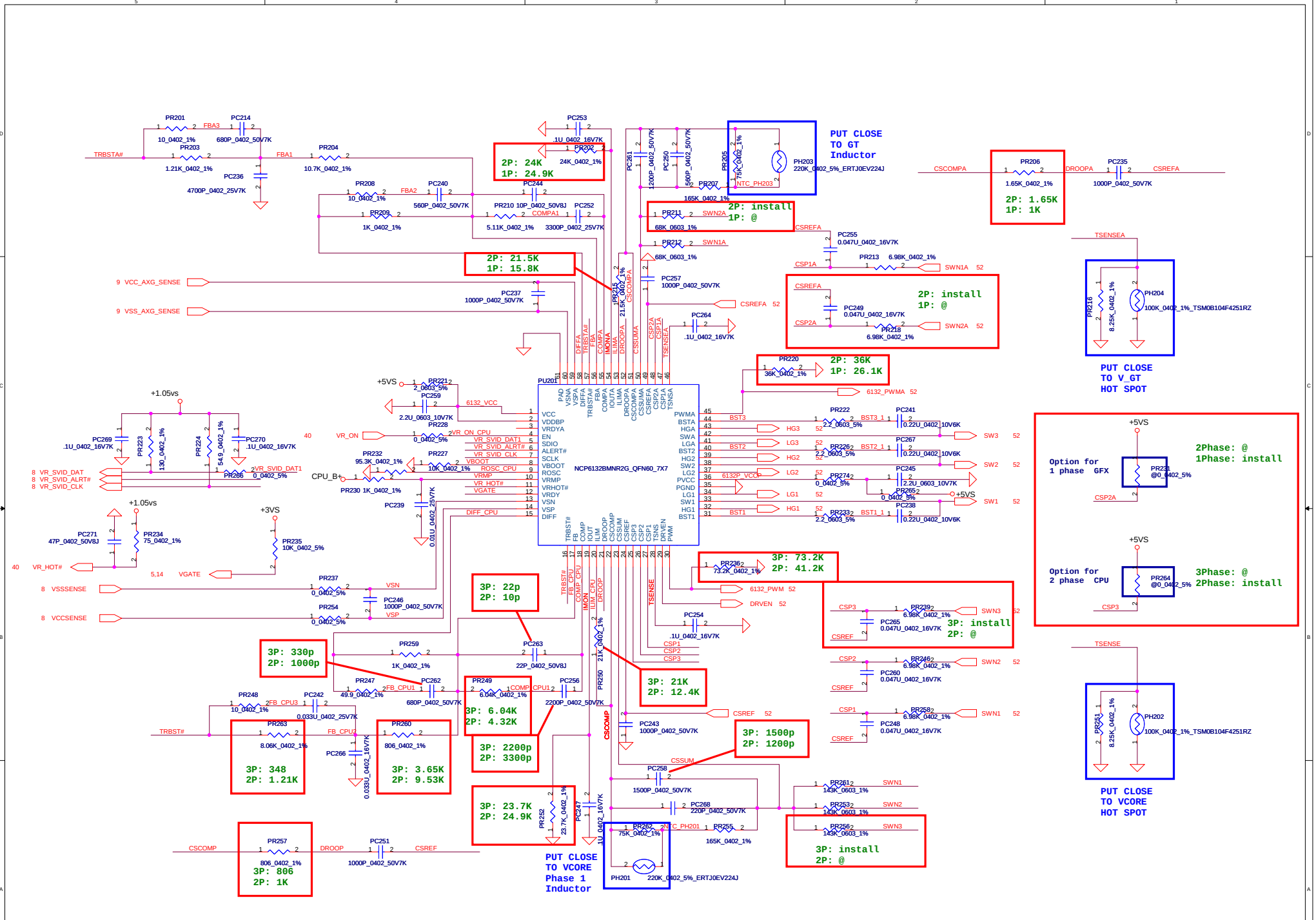

Security Classification	Compal Secret Data		
Issued Date	2009/12/01	Deciphered Date	2010/12/31

THIS SHEET OF ENGINEERING DRAWING IS THE PROPRIETARY PROPERTY OF COMPAL ELECTRONICS, INC. AND CONTAINS CONFIDENTIAL AND TRADE SECRET INFORMATION. THIS SHEET MAY NOT BE TRANSFERED FROM THE CUSTODY OF THE COMPETENT DIVISION OF R&D DEPARTMENT EXCEPT AS AUTHORIZED BY COMPAL ELECTRONICS, INC. NEITHER THIS SHEET NOR THE INFORMATION IT CONTAINS MAY BE USED BY OR DISCLOSED TO ANY THIRD PARTY WITHOUT PRIOR WRITTEN CONSENT OF COMPAL ELECTRONICS, INC.

Compal Electronics, Inc.

Title: **PWR-CPU_CORE**

Size: Custom | Document Number: PBL22 LA-7391P M/B | Rev: 0.2

Date: Thursday, October 27, 2011 | Sheet 51 of 59

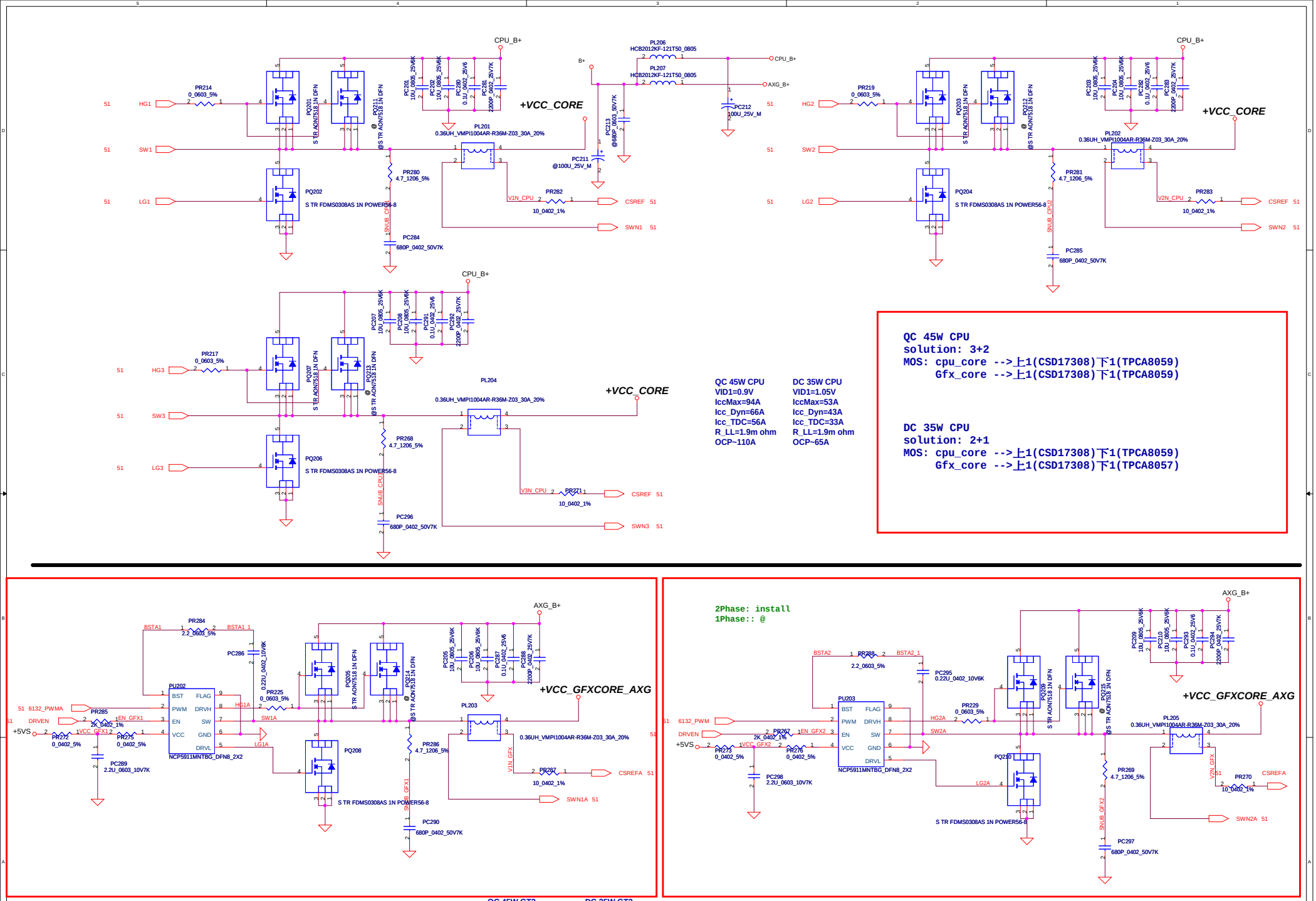

Security Classification	Compal Secret Data		
Issued Date	2009/12/01	Deciphered Date	2010/12/31

THIS SHEET OF ENGINEERING DRAWING IS THE PROPRIETARY PROPERTY OF COMPAL ELECTRONICS, INC. AND CONTAINS CONFIDENTIAL AND TRADE SECRET INFORMATION. THIS SHEET MAY NOT BE TRANSFERED FROM THE CUSTODY OF THE COMPETENT DIVISION OF R&D DEPARTMENT EXCEPT AS AUTHORIZED BY COMPAL ELECTRONICS, INC. NEITHER THIS SHEET NOR THE INFORMATION IT CONTAINS MAY BE USED BY OR DISCLOSED TO ANY THIRD PARTY WITHOUT PRIOR WRITTEN CONSENT OF COMPAL ELECTRONICS, INC.

Compal Electronics, Inc.

Title: PWR-CPU_CORE

Size: C | Document Number: PBL22 LA-7391P M/B | Rev: 0.2

Date: Thursday, October 27, 2011 | Sheet 52 of 59

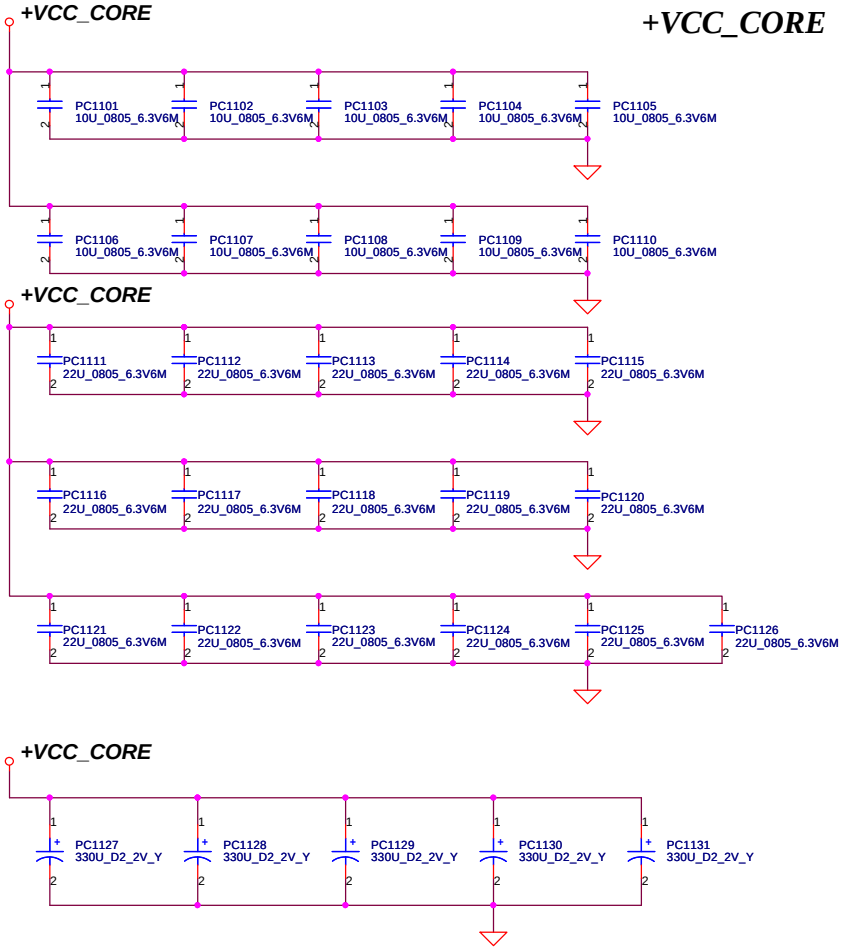

+VCC_CORE

+VCC_GFXCORE_AXG

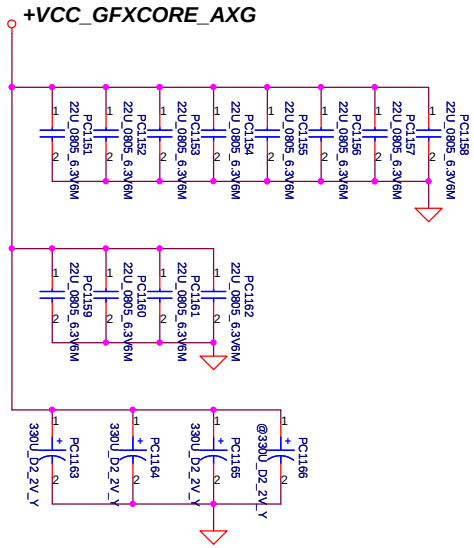

Below is 458544_CRV_PDDG_0.5 Table 5-8.

Socket Bottom	5 x 22 µF (0805) 5 x (0805) no-stuff sites
Socket Top	7 x 22 µF (0805) 2 x (0805) no-stuff sites

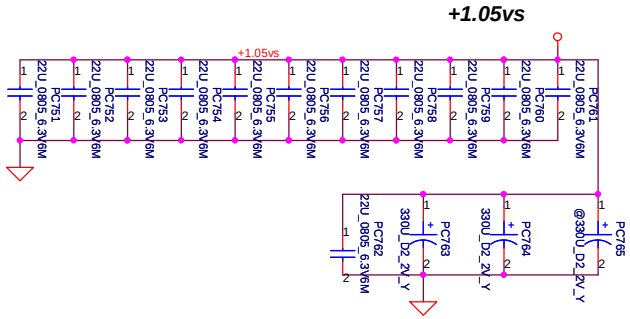

Chief River	330uF*9m	470uF*4.5m	22uF	10uF
8layer for DC CPU	4		16	10
8layer for QC CPU	5		16	10
6layer for DC CPU	5		16	10
6layer for QC CPU	4	1	16	10
GFX_CORE DC	2		12	
GFX_CORE QC	3		12	
1.05V_VCCP	2		12	

Security Classification	Compal Secret Data		
Issued Date	2008/09/15	Deciphered Date	2012/12/31

THIS SHEET OF ENGINEERING DRAWING IS THE PROPRIETARY PROPERTY OF COMPAL ELECTRONICS, INC. AND CONTAINS CONFIDENTIAL AND TRADE SECRET INFORMATION. THIS SHEET MAY NOT BE TRANSFERED FROM THE CUSTODY OF THE COMPETENT DIVISION OF R&D DEPARTMENT EXCEPT AS AUTHORIZED BY COMPAL ELECTRONICS, INC. NEITHER THIS SHEET NOR THE INFORMATION IT CONTAINS MAY BE USED BY OR DISCLOSED TO ANY THIRD PARTY WITHOUT PRIOR WRITTEN CONSENT OF COMPAL ELECTRONICS, INC.

Compal Electronics, Inc.

Title: **PWR - PROCESSOR DECOUPLING**

Size | Document Number: LA-8224P | Rev: 0.2

Date: Thursday, October 27, 2011 | Sheet 53 of 59

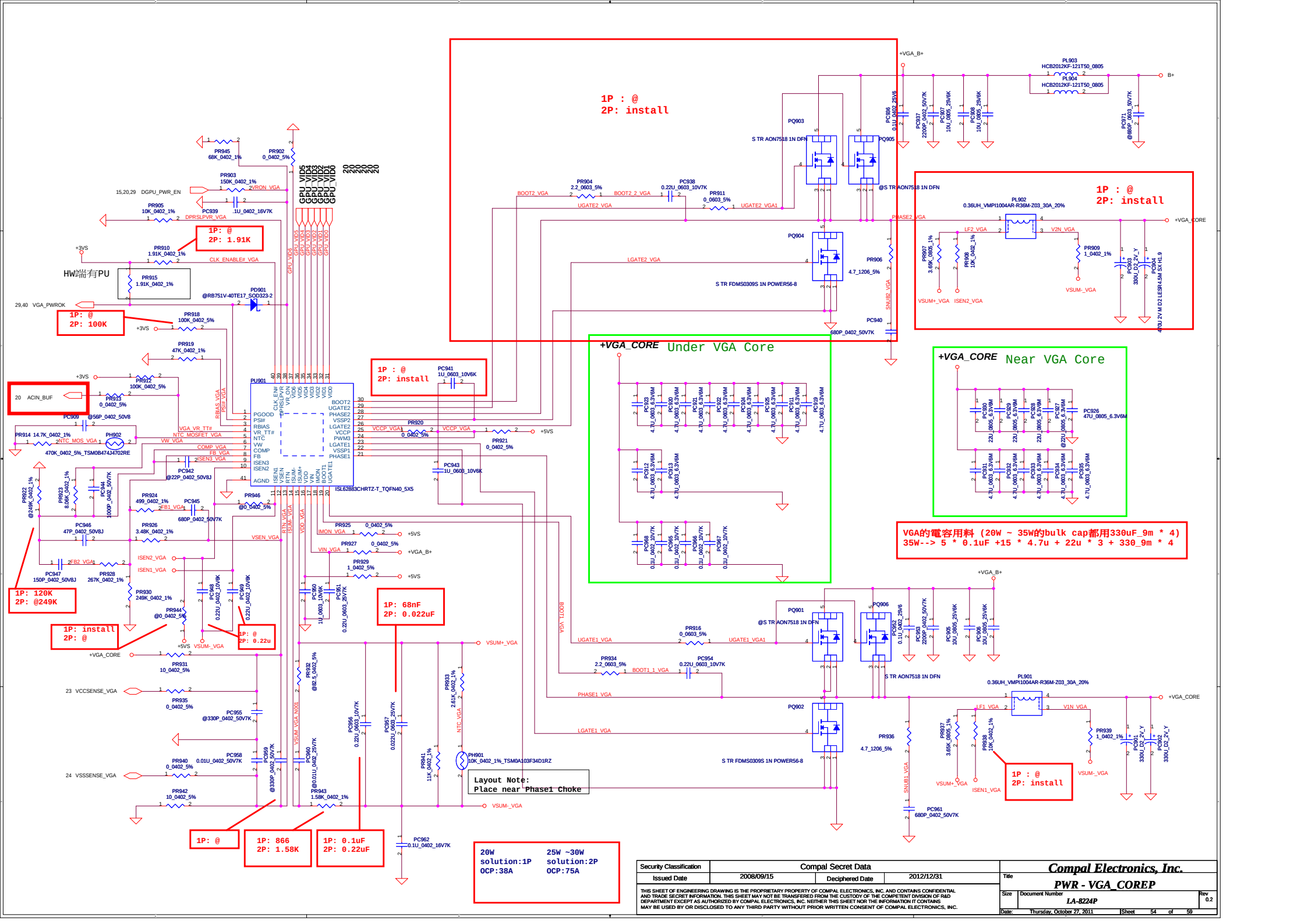
1P : @
2P: install
1P : @
2P: install
1P : @
2P: install
1P : @
2P: install
1P: @
2P: 1.91K
1P: @
2P: 100K
HW端有PU
1P: 120K
2P: @249K
1P: install
2P: @
1P: @
2P: 0.22u
1P: 68nF
2P: 0.022uF
1P: @
1P: 866
2P: 1.58K
1P: 0.1uF
2P: 0.22uF
1P : @
2P: install
+VGA_CORE Under VGA Core
+VGA_CORE Near VGA Core
VGA的電容用料 (20W ~ 35W的bulk cap都用330uF_9m * 4)
35W--> 5 * 0.1uF +15 * 4.7u + 22u * 3 + 330_9m * 4
Layout Note:
Place near Phase1 Choke
20W
solution:1P
OCP:38A
25W ~30W
solution:2P
OCP:75A
Security Classification
Compal Secret Data
Issued Date
2008/09/15
Deciphered Date
2012/12/31
THIS SHEET OF ENGINEERING DRAWING IS THE PROPRIETARY PROPERTY OF COMPAL ELECTRONICS, INC. AND CONTAINS CONFIDENTIAL AND TRADE SECRET INFORMATION. THIS SHEET MAY NOT BE TRANSFERED FROM THE CUSTODY OF THE COMPETENT DIVISION OF R&D DEPARTMENT EXCEPT AS AUTHORIZED BY COMPAL ELECTRONICS, INC. NEITHER THIS SHEET NOR THE INFORMATION IT CONTAINS MAY BE USED BY OR DISCLOSED TO ANY THIRD PARTY WITHOUT PRIOR WRITTEN CONSENT OF COMPAL ELECTRONICS, INC.
Compal Electronics, Inc.
Title
PWR - VGA_COREP
Size
Document Number
LA-8224P
Rev
0.2
Date: Thursday, October 27, 2011
Sheet 54 of 59

Power block

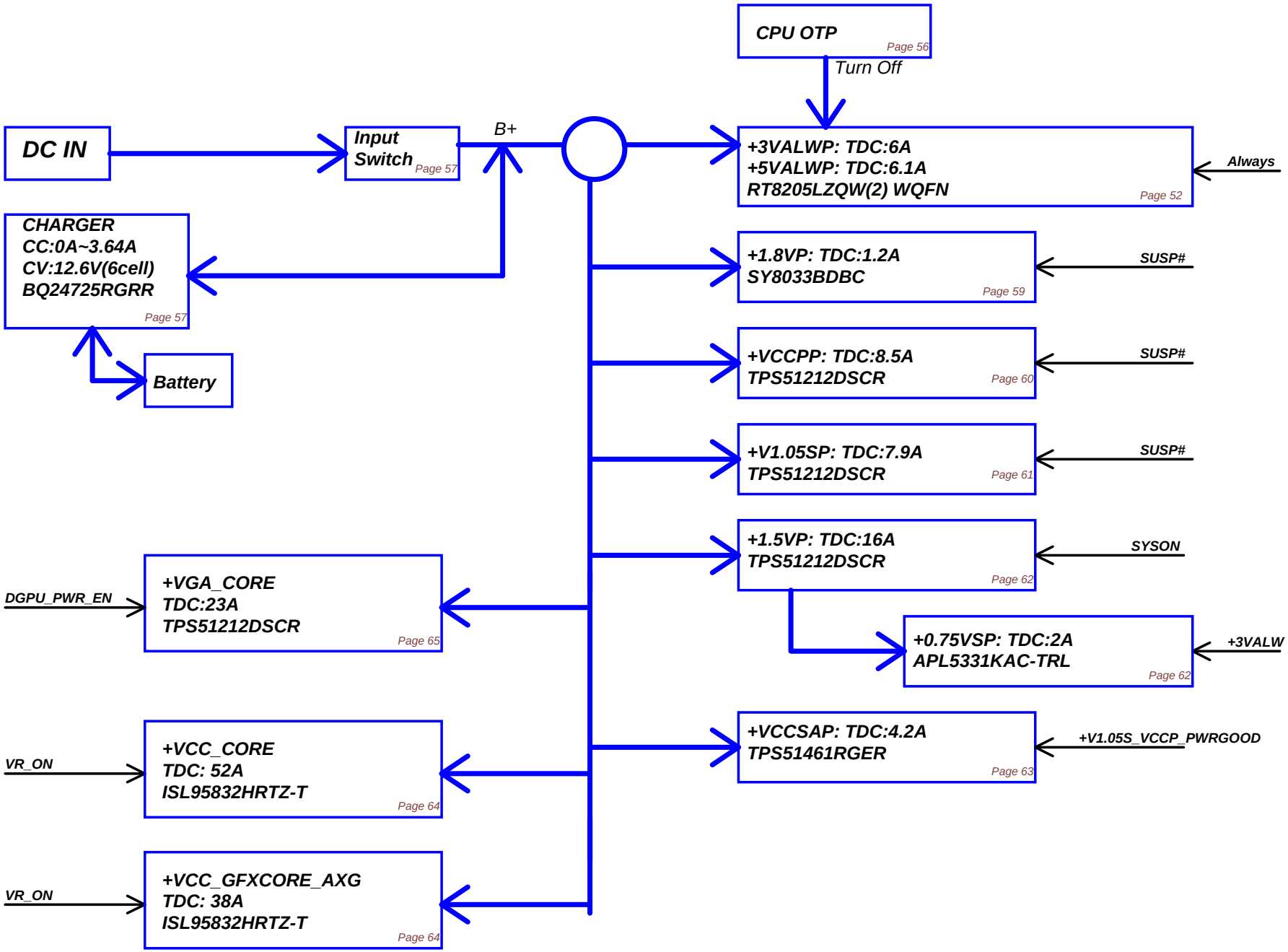

Security Classification	Compal Secret Data		
Issued Date	2010/08/03	Deciphered Date	2012/12/31

THIS SHEET OF ENGINEERING DRAWING IS THE PROPRIETARY PROPERTY OF COMPAL ELECTRONICS, INC. AND CONTAINS CONFIDENTIAL AND TRADE SECRET INFORMATION. THIS SHEET MAY NOT BE TRANSFERED FROM THE CUSTODY OF THE COMPETENT DIVISION OF R&D DEPARTMENT EXCEPT AS AUTHORIZED BY COMPAL ELECTRONICS, INC. NEITHER THIS SHEET NOR THE INFORMATION IT CONTAINS MAY BE USED BY OR DISCLOSED TO ANY THIRD PARTY WITHOUT PRIOR WRITTEN CONSENT OF COMPAL ELECTRONICS, INC.

Compal Electronics, Inc.

Title: POWER BLOCK DIAGRAM

Size: Custom | Document Number: LA-8224P | Rev: 0.2

Date: Thursday, October 27, 2011 | Sheet 55 of 59

Version Change List (P. I. R. List) Page 1

Item	Page #	Title	Date	Request Owner	Issue Description	Solution Description	Rev.

THIS SHEET OF ENGINEERING DRAWING IS THE PROPRIETARY PROPERTY OF COMPAL ELECTRONICS, INC. AND CONTAINS CONFIDENTIAL AND TRADE SECRET INFORMATION. THIS SHEET MAY NOT BE TRANSFERED FROM THE CUSTODY OF THE COMPETENT DIVISION OF R&D DEPARTMENT EXCEPT AS AUTHORIZED BY COMPAL ELECTRONICS, INC. NEITHER THIS SHEET NOR THE INFORMATION IT CONTAINS MAY BE USED BY OR DISCLOSED TO ANY THIRD PARTY WITHOUT PRIOR WRITTEN CONSENT OF COMPAL ELECTRONICS, INC.

Security Classification	Compal Secret Data		
Issued Date	2008/09/15	Deciphered Date	2012/12/31

Compal Electronics, Inc.

Title: PWR - PIR

Size: | Document Number: LA-8224P | Rev: 0.2

Date: Thursday, October 27, 2011 | Sheet 56 of 59

Timing Diagram for G3 or S4-5/M-off (Suspend Well Off) to S0/M0 [non Deep S4/S5 Platform]

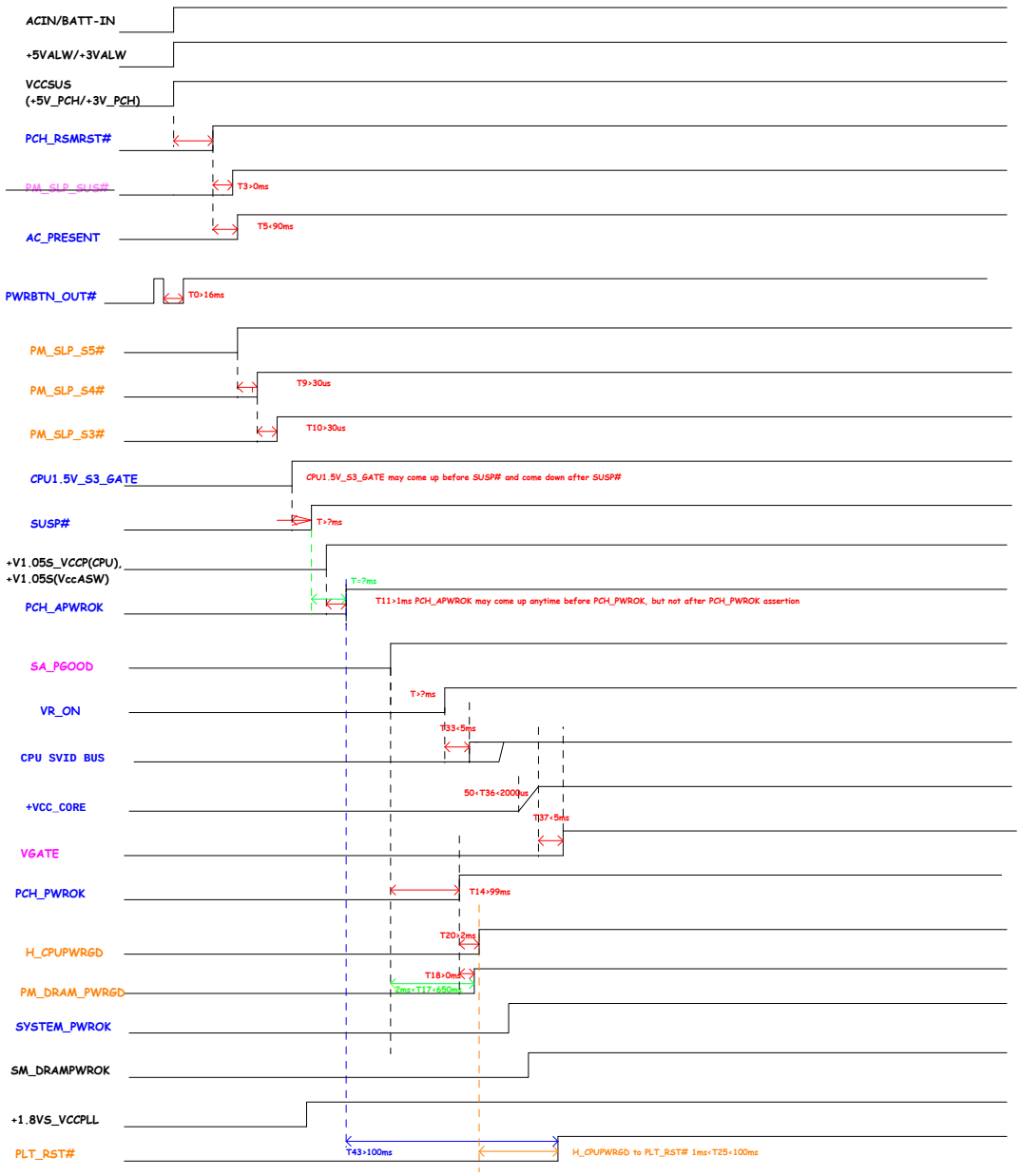

Color	Command
Signal Names	Timing of these signals is set by PCH or processor
Signal Names	Timing of these signals should be met by the platform (EC)
Signal Names	Timing of these signals is set by IntelR MVP
Signal Names	Voltage rails or chip-to-chip buses

Security Classification	Compal Secret Data		
Issued Date	2009/12/05	Deciphered Date	2011/12/31

THIS SHEET OF ENGINEERING DRAWING IS THE PROPRIETARY PROPERTY OF COMPAL ELECTRONICS, INC. AND CONTAINS CONFIDENTIAL TECHNOLOGY AND TRADE SECRET INFORMATION. THIS SHEET OF ENGINEERING DRAWING OR ANY PART THEREOF MAY NOT BE REPRODUCED OR DISCLOSED IN WHOLE OR IN PART OR USED FOR ANY OTHER PURPOSE EXCEPT AS AUTHORIZED BY COMPAL ELECTRONICS, INC. NEITHER THIS SHEET NOR THE INFORMATION ON IT MAY BE USED BY OR DISCLOSED TO ANY THIRD PARTY WITHOUT PRIOR WRITTEN CONSENT OF COMPAL ELECTRONICS, INC.

Title: Power Sequence

Size: | Document Number: LA-8224P | Rev: 0.3

Date: Thursday, October 21, 2010 | Sheet 37 of 38

Version Change List (P. I. R. List) Page 1/2

Item	Fixed Issue	Reason for change	Rev.	PG#	Modify List	Date	Phase
ER01		HW Design (TMDS_B_HPD)	0.2	14	Delete R205	09/21	
ER02		For non AI co-lay	0.2	37	Add R745,R746 for non AI AI parts change to AI@	09/21	
ER03	+3VS Leakage	HW Design (SMBus leakage)	0.2	13 40	Delete Q3. (connect pin S & D) remove R135, R137 Del R552, R556	09/21	
ER04	Can`t detect USB30 (JUSB2)	HW Design (PCB2)	0.2	36	Swap U90.39/40 to U90.36/37 net Change R1040 to 47K from 4.7K ohm Reserve R1029	09/21	
ER05		Design change for card reader	0.2	34	Add Q20,R773,R775 Reserve R768,R774. Change Net name at Card reader Conn	09/22	
ER06		HW Design (PURC demand)	0.2	29	Change to Q3(AO3404L) from U22(AO4430L)	09/21	
ER07		HW Design(PCB2)	0.2	36	Change R1049 to 330k Change Q904 to AO3404L from AP2301GN Change R1046 to 1.5M	09/21	
ER08		HW Design (PURC demand)	0.2	42	Change Q33 to AO3413L from AP2301GN	09/21	
ER09		Fine-tune GPU timing	0.2	29	Change R433 to 0 ohm un-stuff C396 Change R432 to 10K Change R435 to 200 ohm	09/21	
ER10		HW Design (reserve)	0.2	18	Reserve R290	09/21	
ER11		HW Design(PCB2) for add VRAM DDR3 512MX8	0.2	25,26, 27,28	Add CMDA14 signal (U12~U19 pin J7)	09/28	
ER12		HW Design (change)	0.2	39	Reverse JKB1 connector	09/30	
ER13		HW Design	0.2	40	Del Y5 , C545 , C546	09/30	
ER14		HW Design (PURC demand)	0.2	15	Del R229,R230 (10K) Add R776~R783 (10K) Del R237,R239,R242 (8.2K) Add R784~R793 (8.2K)	09/30	
ER15		HW Design (PURC demand)	0.2	29,31 37,38 10,11	Change P/N C387,C389,C399,C436,C447,C602 Change P/N C509,C515,C518,C526,(0402) Change P/N C99,C109,C118,C120,C140,C141.(0402)	10/03	
ER16		HW Design(XTAL fine-tune)	0.2	42,12 13,32 20,36	Change R607 to 10 ohm Change Y3,C900,C901. Change Y1,C144,C145 Change Y4,C469,C473. Change Y2,C163,C164 Change Y9	10/07	
ER17		HW Design for instant on function	0.2	13 5	Reserve R750 R576 pin2 change to +3V_PCH from +3VS Change R576 to 0	10/07	
ER18		HW Design (power jumper change to +3VL)	0.2	38 40	jumper PJP302 (change +3VLP to +3VL @P38,P40)	10/07	
ER19		HW Design (PURC demand)	0.2		Change P/N Q7,U20,U21. Change P/N Q14~Q19,Q25,Q27~Q29,Q32,Q34~Q37,Q40~Q43, Q46~Q51,Q55~Q57,Q60,Q61,Q902,Q903,Q905. Change P/N Q23	10/14	
ER20		EMI solution	0.2	5	Add R684 to 0 (H_CPUPWRGD)	10/14	
ER21		Refer to ORB design	0.2	14 40	un-stuff D2, Add R751 un-stuff D32, R547, Add R752 Assign U33.18 to AC_PRESENT signal.	10/14	
ER22		change for GPU H/W strapping STRAP1 to PL 45K ohm to enhanced the PCIe PEG driving.	0.2	22	Change R349 from 34.8K to 45.3K	10/14	

Security Classification	Compal Secret Data			Compal Electronics, Inc.
Issued Date	2009/12/01	Deciphered Date	2011/12/31	Title EE-PIR-1
				Size Custom / Document Number LA-8224P / Rev 0.2
				Date: Thursday, October 27, 2011 / Sheet 58 of 59

THIS SHEET OF ENGINEERING DRAWING IS THE PROPRIETARY PROPERTY OF COMPAL ELECTRONICS, INC. AND CONTAINS CONFIDENTIAL AND TRADE SECRET INFORMATION. THIS SHEET MAY NOT BE TRANSFERED FROM THE CUSTODY OF THE COMPETENT DIVISION OF R&D DEPARTMENT EXCEPT AS AUTHORIZED BY COMPAL ELECTRONICS, INC. NEITHER THIS SHEET NOR THE INFORMATION IT CONTAINS MAY BE USED BY OR DISCLOSED TO ANY THIRD PARTY WITHOUT PRIOR WRITTEN CONSENT OF COMPAL ELECTRONICS, INC.

Version Change List (P. I. R. List) Page 2/2

Item	Fixed Issue	Reason for change	Rev.	PG#	Modify List	Date	Phase
ER23		modify parts for Intel review feedback message.	0.2	09 18 17 14 15	Add R289 Add C149 0.1uf Del L6, Add R289 , un-stuff C212 Del L4, Add R387 Add R230 Stuff R244	10/14	
ER24		Modify H2 size	0.2	38	Modify H2 size	10/17	
ER25		Refer to Intel review feedback item 45.	0.2	16	Add R807	10/19	
ER26		Reserve for Deep Sx	0.2	14,16 40	Add unstuff R800,R801,R802,R803,R804,R805 Add PCH_DPWROK,DS_WAKE#,SUSACK#,SUSWARN#	10/19	
ER27		Reserve for ROM protect	0.2	40	Add unstuff R806	10/19	
ER28		For Instant On function control by EC	0.2	06	Stuff R44, Unstuff R43	10/19	
ER29		RF request	0.2	36	Reserve R1082 , C1045	10/19	
ER30		For LED issue	0.2	39	change LED3 footprint to LED_HT-210UD-UYG_3P	10/20	
ER31		PRUC request	0.2	38 39	Change SW3,SW4,SW5 P/N	10/20	
ER32		PRUC request	0.2	39	Change U36 P/N	10/20	
ER33		For EMI request (without MS_CLK)	0.2	34	Remove R637,C611,R631,C620.	10/20	
ER34		dGPU thermal throttling.	0.2	20 40	Add R428, Revise U11 I/O signal. Un-stuff R730.	10/20	
ER35		SPI flash data crisis prevention.	0.2	12 40	Add Q63, R135, R137. Change U33.41 net to EC_SPI_WP. remove R806.	10/20	
ER36		Power switch EOS issue prevention.	0.2	37	Change C510, C516, C519 to 0.22uF/16V.	10/20	
ER37		For EMI request	0.2	32 35	Change R485 , R486 to 0.1uF Reserve C641~C648	10/20	
ER38		For ESD request	0.2	37,35 30,39	Change D27,D29,D24,D25. Change D6,D7,D9,D10,D33,D34.	10/20	
ER39		Modify X76 table (N13P-GS & N13M-GE1 x8)	0.2	3	update X76 table (add ZZZ9 ~ZZZ12 for N13P-GS & N13M-GE1 x8) & P/N	10/25	
ER40		update Power circuit	0.2	43~56	update Power circuit. (PC211)	10/26	
ER41		Modify PCH_SPI_WP# singal control by EC	0.2	12	Stuff R135	10/26	
ER42		Add test point for DFT	0.2	20	Add GPU_JTAG_TCK,GPU_JTAG_TDI,GPU_JTAG_TDO, GPU_JTAG_TMS	10/27	
ER43		For ASM1042 OC# pull-up	0.2	37	Reserve R1023,R1024 un-stuff	10/27 b	

THIS SHEET OF ENGINEERING DRAWING IS THE PROPRIETARY PROPERTY OF COMPAL ELECTRONICS, INC. AND CONTAINS CONFIDENTIAL AND TRADE SECRET INFORMATION. THIS SHEET MAY NOT BE TRANSFERED FROM THE CUSTODY OF THE COMPETENT DIVISION OF R&D DEPARTMENT EXCEPT AS AUTHORIZED BY COMPAL ELECTRONICS, INC. NEITHER THIS SHEET NOR THE INFORMATION IT CONTAINS MAY BE USED BY OR DISCLOSED TO ANY THIRD PARTY WITHOUT PRIOR WRITTEN CONSENT OF COMPAL ELECTRONICS, INC.