NSKAA

Bradford 10/10G

LA-5361P REV 1.0 Schematic

Intel Auburndale/IBEX

2009-11-26 Rev. 01.0

CONFIDENTIAL

Security Classification	Compal Secret Data		
Issued Date	2009/11/26	Deciphered Date	2010/11/26

THIS SHEET OF ENGINEERING DRAWING IS THE PROPRIETARY PROPERTY OF COMPAL ELECTRONICS, INC. AND CONTAINS CONFIDENTIAL AND TRADE SECRET INFORMATION. THIS SHEET MAY NOT BE TRANSFERED FROM THE CUSTODY OF THE COMPETENT DIVISION OF R&D DEPARTMENT EXCEPT AS AUTHORIZED BY COMPAL ELECTRONICS, INC. NEITHER THIS SHEET NOR THE INFORMATION IT CONTAINS MAY BE USED BY OR DISCLOSED TO ANY THIRD PARTY WITHOUT PRIOR WRITTEN CONSENT OF COMPAL ELECTRONICS, INC.

Compal Electronics, Inc.

Title	SCHEMATIC,MB A5361	
Size	Document Number 401715	Rev B
Date: Monday, January 11, 2010	Sheet 1 of 52	

Compal Confidential
Model Name : NSKAA
File Name : LA-5361P

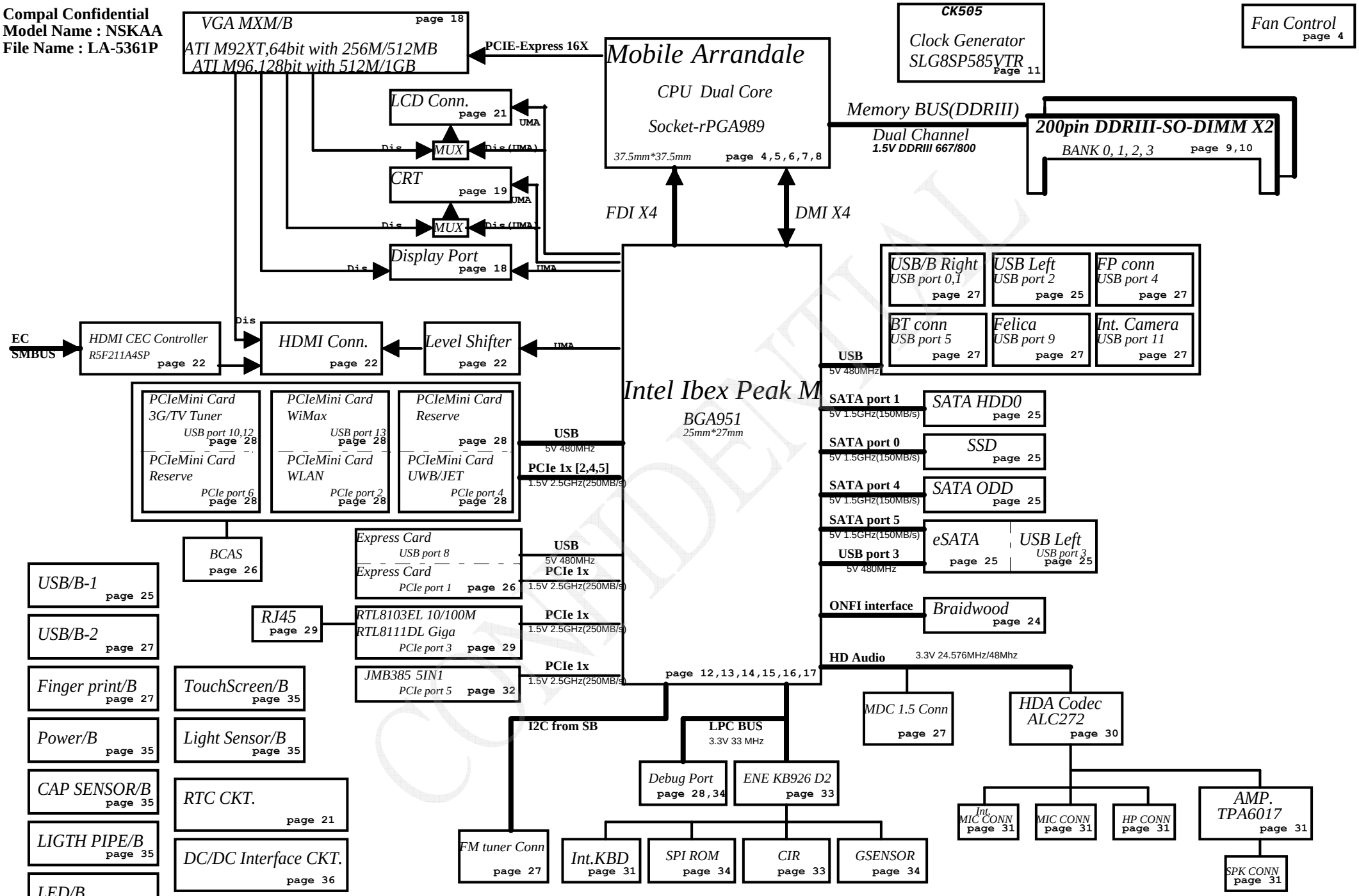

CONFIDENTIAL

Security Classification	Compal Secret Data		
Issued Date	2009/11/26	Deciphered Date	2010/11/26

THIS SHEET OF ENGINEERING DRAWING IS THE PROPRIETARY PROPERTY OF COMPAL ELECTRONICS, INC. AND CONTAINS CONFIDENTIAL AND TRADE SECRET INFORMATION. THIS SHEET MAY NOT BE TRANSFERED FROM THE CUSTODY OF THE COMPETENT DIVISION OF R&D DEPARTMENT EXCEPT AS AUTHORIZED BY COMPAL ELECTRONICS, INC. NEITHER THIS SHEET NOR THE INFORMATION IT CONTAINS MAY BE USED BY OR DISCLOSED TO ANY THIRD PARTY WITHOUT PRIOR WRITTEN CONSENT OF COMPAL ELECTRONICS, INC.

Compal Electronics, Inc.

Title: SCHEMATIC,MB A5361

Size | Document Number: 401715 | Rev: B

Date: Monday, January 11, 2010 | Sheet 2 of 52

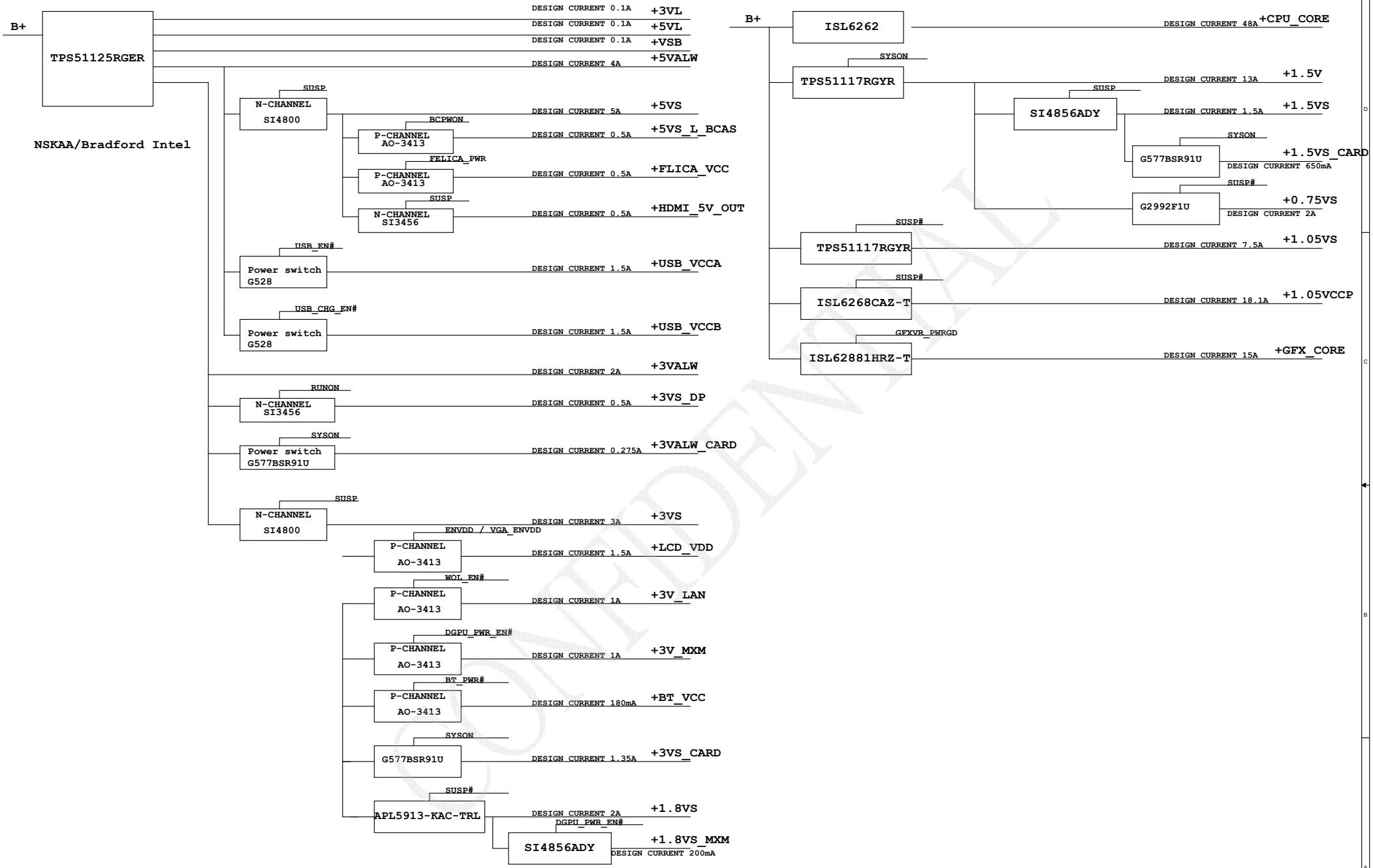

CONFIDENTIAL

Security Classification	Compal Secret Data			Compal Electronics, Inc.
Issued Date	2009/11/26	Deciphered Date	2010/11/26	Title: SCHEMATIC,MB A5361

THIS SHEET OF ENGINEERING DRAWING IS THE PROPRIETARY PROPERTY OF COMPAL ELECTRONICS, INC. AND CONTAINS CONFIDENTIAL AND TRADE SECRET INFORMATION. THIS SHEET MAY NOT BE TRANSFERED FROM THE CUSTODY OF THE COMPETENT DIVISION OF R&D DEPARTMENT EXCEPT AS AUTHORIZED BY COMPAL ELECTRONICS, INC. NEITHER THIS SHEET NOR THE INFORMATION IT CONTAINS MAY BE USED BY OR DISCLOSED TO ANY THIRD PARTY WITHOUT PRIOR WRITTEN CONSENT OF COMPAL ELECTRONICS, INC.

Size	Document Number	Rev
	401715	B

Date: Monday, January 11, 2010 Sheet 3 of 52

Voltage Rails

(O MEANS ON X MEANS OFF)

power plane / State	+RTCVCC	+B +3VL +5VL	+5VALW +3VALW	+1.5V	+5VS +3VS +CPU_CORE +VCCP +1.05VS +1.8VS +1.5VS +0.75VS +GFX_CORE
S0	O	O	O	O	O
S1	O	O	O	O	O
S3	O	O	O	O	X
S5 S4/AC	O	O	O	X	X
S5 S4/ Battery only	O	O	X	X	X
S5 S4/AC & Battery don't exist	O	X	X	X	X

BTO Option Table

BTO Option Table

Function	HDMI			CRT	Display	LAN		
description	(Y)			(Q)	(Z)	(E)	(C)	
explain	Intel(UMA)	ATI MXM/B	COMMON			10/100M	Giga	
BTO	IHDMI@	NIHDMI@ HDMI@	H@	CRT@	DP@	8103EL@	8111DL@	

Function	3G SIM slot	Mini card	Felica	Finger printer	CIR	CAMERA & MIC		BLUE TOOTH
description	(3)	(D2)	(J)	(F)	(I)	(X)		(B)
explain		Two Cards				CAMERA	MIC	
BTO	3G@	3G@	FLICA@	FP@	CIR@	CAM@	MIC@	BT@

SMBUS Control Table

	SOURCE	BATT	XDP	SODIMM/ LDO-DDR Vref	CLK CHIP	MINI CARD	NewCard	(THERMAL) KB926	THERMAL SENSOR (MXM)	G-SENSOR	Light Sensor	HDMI's CEC
SMB_EC_CK1 SMB_EC_DA1	KB926	V	X	X	X	X	X	X	X	X	X	V
SMBCLK SMBDATA	PCH	X	X	V	V	V	V	X	X	X	X	X
SML0CLK SML0DATA	PCH	X	X	X	X	X	X	X	X	X	X	X
SML1CLK SML1DATA	PCH	X	X	X	X	X	X	V	X	X	X	X
SMB_EC_CK2 SMB_EC_DA2	KB926	X	X	X	X	X	X	X	V	V	V	X

EC SM Bus1 address

Power	Device	Address
+3VL	EC KB926 D3	
+3VL	Smart Battery	0001 011X b
+3VL	HDMI-CEC	0011 010x b
+3VL	CEC	0011 010x b

EC SM Bus2 address

Power	Device	Address
+3VS	EC KB926 D3	
+3VS	PCH	
+3VS	MXM	0100 1101 b
+3VS	G-Sensor	00x1 1111 b
+3VS	Light Sensor	

PCH SM Bus address

Power	Device	Address
+3VALW	PCH	
+3VS	Clock Generator (SLG8SP587VTR)	
+3VS	DDR DIMM0	1001 000Xb
+3VS	DDR DIMM1	1001 010Xb
+3VS	NewCard	
+3VS	WWLAN	

Stencil Stuff MEMO ver. 0.1

System Jumper->J3, PJ1, PJ2, PJ3, PJ4, PJ5, PJ6, PJ7, PJ8, PJ10, PJ11, PJ13, PJ20
PM@->PJ36,PJ37
GM+SW@->PJ9,PJ12
Stand-Off:
H26,H27,H45,H44(BOT side)
JMXM1->H20,H21(BOT side)
JMDC->H22, H23(BOT side)
JNAND->H38,H42(BOT side)
JGPS->H36,H39(BOT side)
JWLAN->H40,H41(TOP side)
Power Jumper->

Symbol Note :

: means Digital Ground

: means Analog Ground

CONFIDENTIAL

Security Classification	Compal Secret Data		Compal Electronics, Inc.
Issued Date	2009/11/26	Deciphered Date 2010/11/26	Title SCHEMATIC,MB A5361

THIS SHEET OF ENGINEERING DRAWING IS THE PROPRIETARY PROPERTY OF COMPAL ELECTRONICS, INC. AND CONTAINS CONFIDENTIAL AND TRADE SECRET INFORMATION. THIS SHEET MAY NOT BE TRANSFERED FROM THE CUSTODY OF THE COMPETENT DIVISION OF R&D DEPARTMENT EXCEPT AS AUTHORIZED BY COMPAL ELECTRONICS, INC. NEITHER THIS SHEET NOR THE INFORMATION IT CONTAINS MAY BE USED BY OR DISCLOSED TO ANY THIRD PARTY WITHOUT PRIOR WRITTEN CONSENT OF COMPAL ELECTRONICS, INC.

Size	Document Number	Rev
B	401715	0.5

Date: Monday, January 11, 2010 Sheet 4 of 52

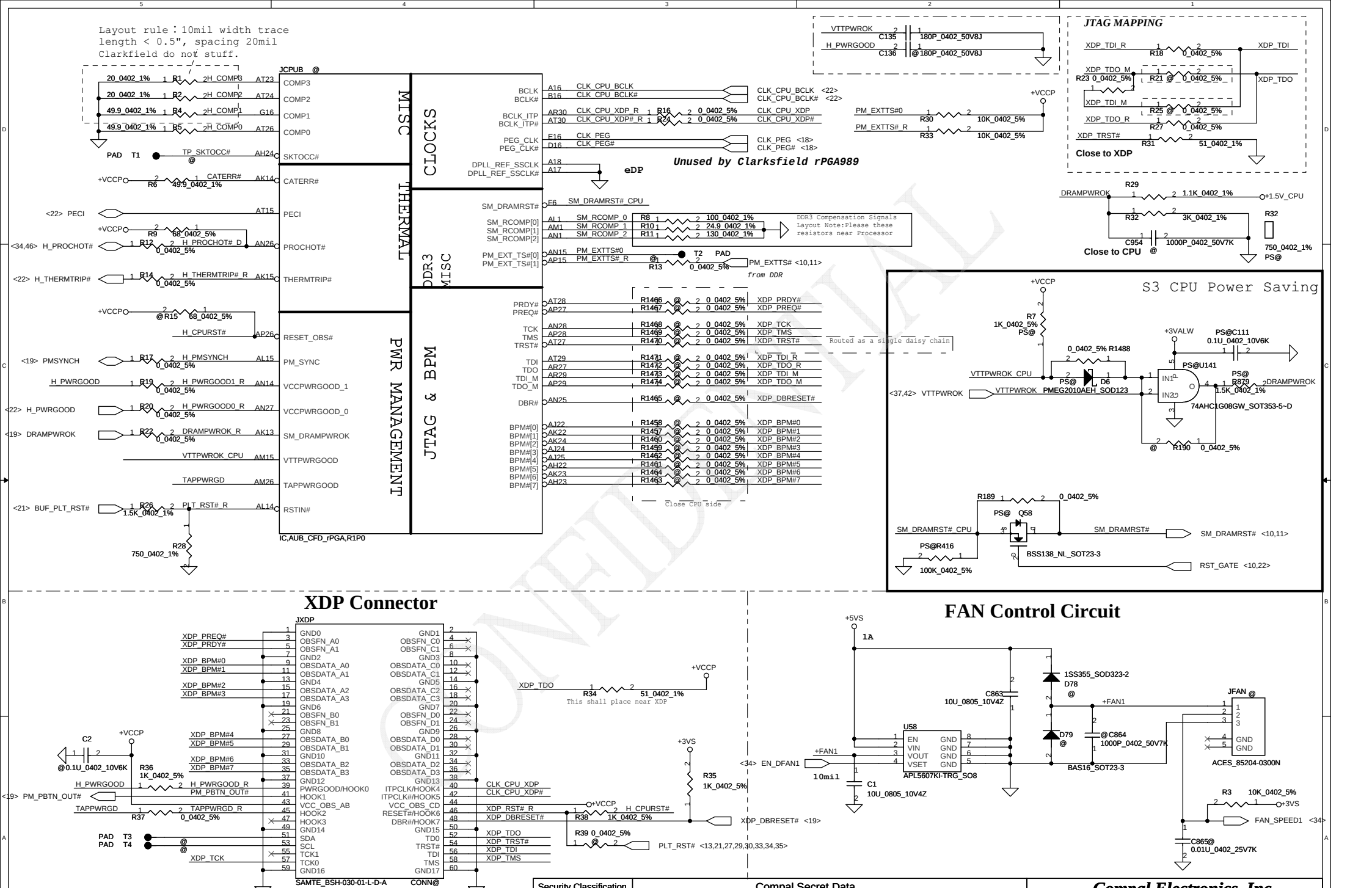

Security Classification	Compal Secret Data		
Issued Date	2009/11/26	Deciphered Date	2010/11/26

THIS SHEET OF ENGINEERING DRAWING IS THE PROPRIETARY PROPERTY OF COMPAL ELECTRONICS, INC. AND CONTAINS CONFIDENTIAL AND TRADE SECRET INFORMATION. THIS SHEET MAY NOT BE TRANSFERED FROM THE CUSTODY OF THE COMPETENT DIVISION OF R&D DEPARTMENT EXCEPT AS AUTHORIZED BY COMPAL ELECTRONICS, INC. NEITHER THIS SHEET NOR THE INFORMATION IT CONTAINS MAY BE USED BY OR DISCLOSED TO ANY THIRD PARTY WITHOUT PRIOR WRITTEN CONSENT OF COMPAL ELECTRONICS, INC.

Compal Electronics, Inc.

Title: SCHEMATIC,MB A5361

Size: Custom | Document Number: 401715 | Rev: B

Date: Monday, January 11, 2010 | Sheet 5 of 52

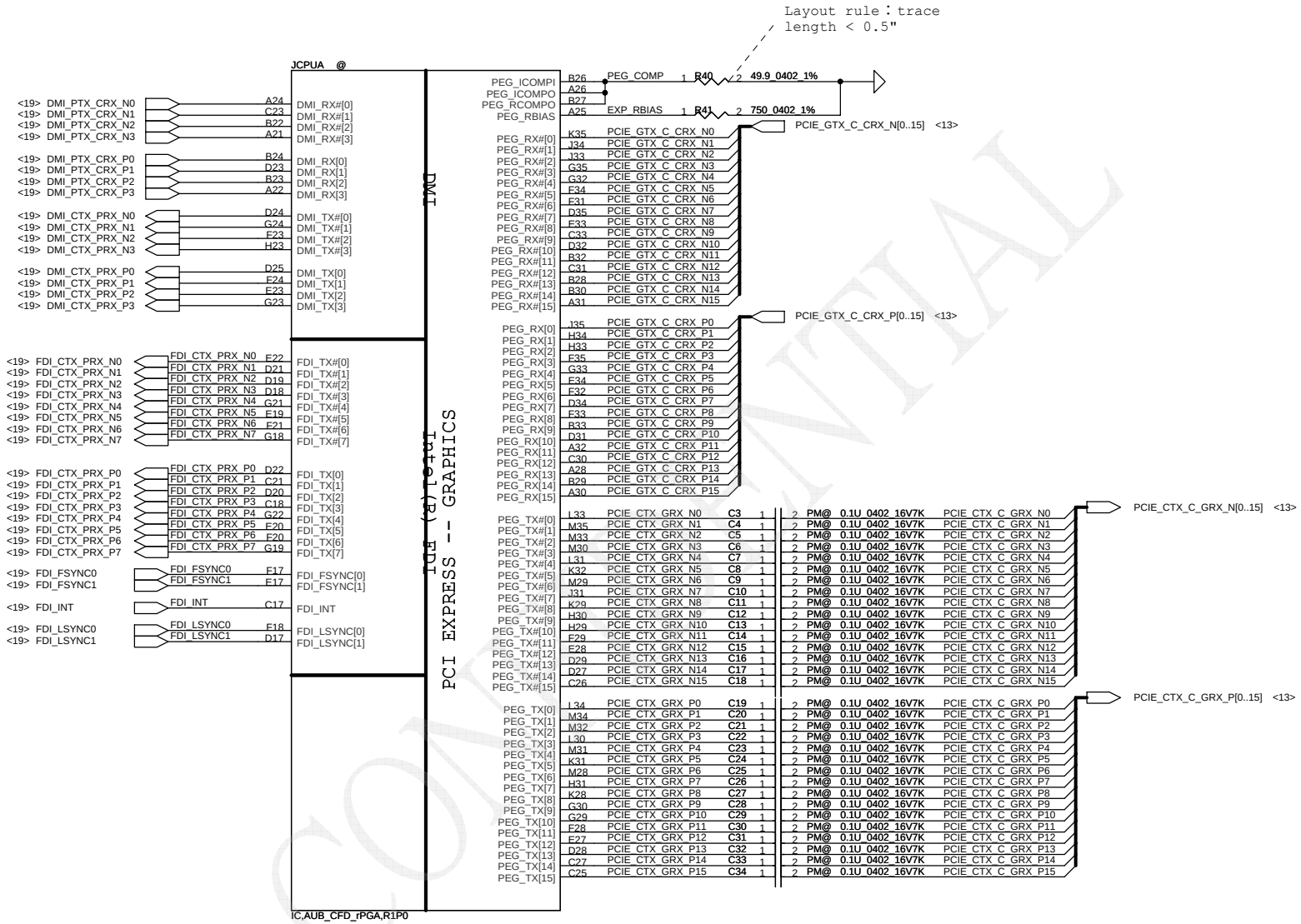

CONFIDENTIAL

Security Classification	Compal Secret Data		
Issued Date	2009/11/26	Deciphered Date	2010/11/26

THIS SHEET OF ENGINEERING DRAWING IS THE PROPRIETARY PROPERTY OF COMPAL ELECTRONICS, INC. AND CONTAINS CONFIDENTIAL AND TRADE SECRET INFORMATION. THIS SHEET MAY NOT BE TRANSFERED FROM THE CUSTODY OF THE COMPETENT DIVISION OF R&D DEPARTMENT EXCEPT AS AUTHORIZED BY COMPAL ELECTRONICS, INC. NEITHER THIS SHEET NOR THE INFORMATION IT CONTAINS MAY BE USED BY OR DISCLOSED TO ANY THIRD PARTY WITHOUT PRIOR WRITTEN CONSENT OF COMPAL ELECTRONICS, INC.

Compal Electronics, Inc.

Title: SCHEMATIC,MB A5361

Size: Custom | Document Number: 401715 | Rev: B

Date: Monday, January 11, 2010 | Sheet 6 of 52

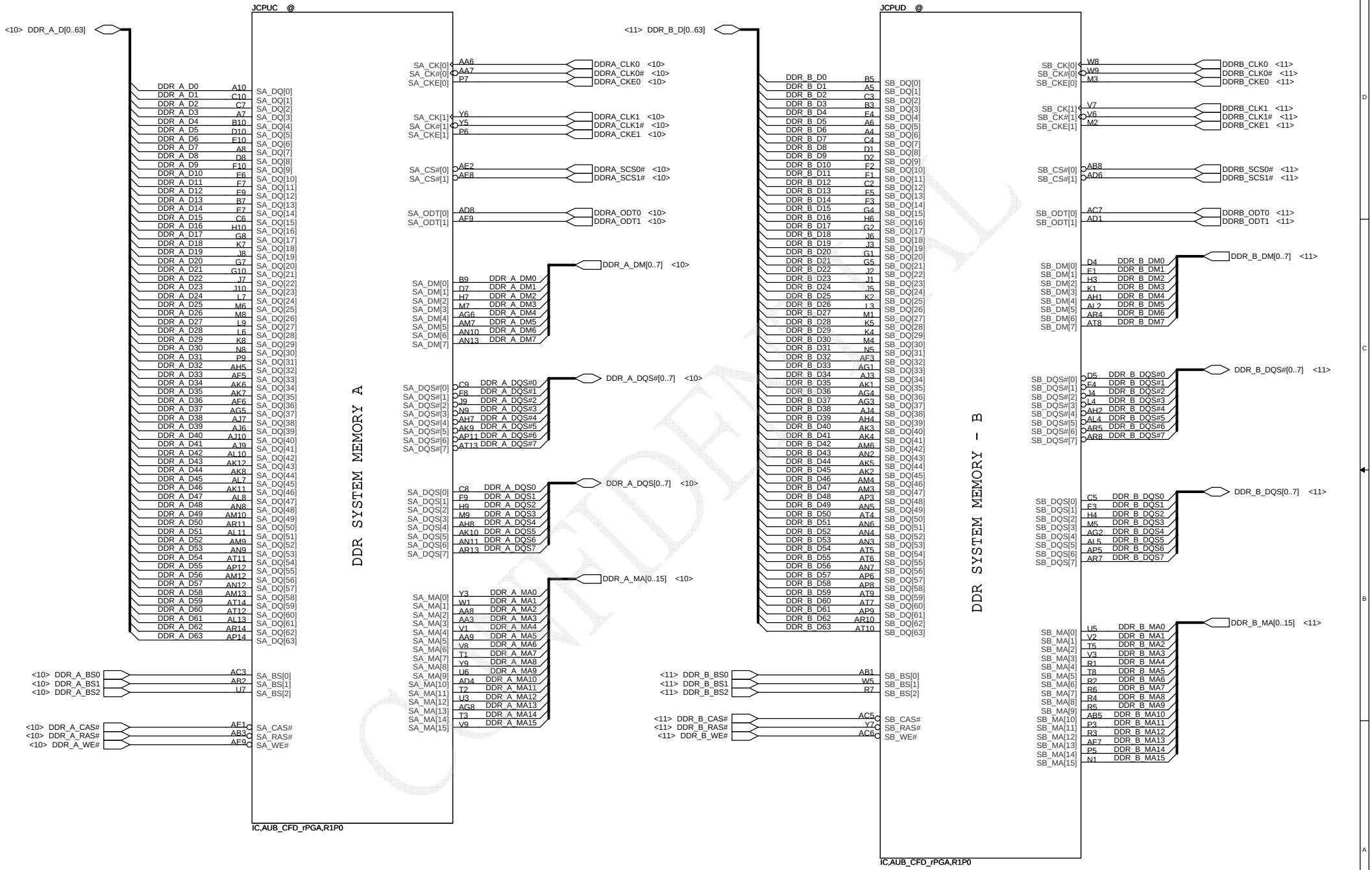

CONFIDENTIAL

Security Classification	Compal Secret Data		
Issued Date	2009/11/26	Deciphered Date	2010/11/26

THIS SHEET OF ENGINEERING DRAWING IS THE PROPRIETARY PROPERTY OF COMPAL ELECTRONICS, INC. AND CONTAINS CONFIDENTIAL AND TRADE SECRET INFORMATION. THIS SHEET MAY NOT BE TRANSFERED FROM THE CUSTODY OF THE COMPETENT DIVISION OF R&D DEPARTMENT EXCEPT AS AUTHORIZED BY COMPAL ELECTRONICS, INC. NEITHER THIS SHEET NOR THE INFORMATION IT CONTAINS MAY BE USED BY OR DISCLOSED TO ANY THIRD PARTY WITHOUT PRIOR WRITTEN CONSENT OF COMPAL ELECTRONICS, INC.

Compal Electronics, Inc.

Title: SCHEMATIC,MB A5361

Size: Custom | Document Number: 401715 | Rev: B

Date: Monday, January 11, 2010 | Sheet 7 of 52

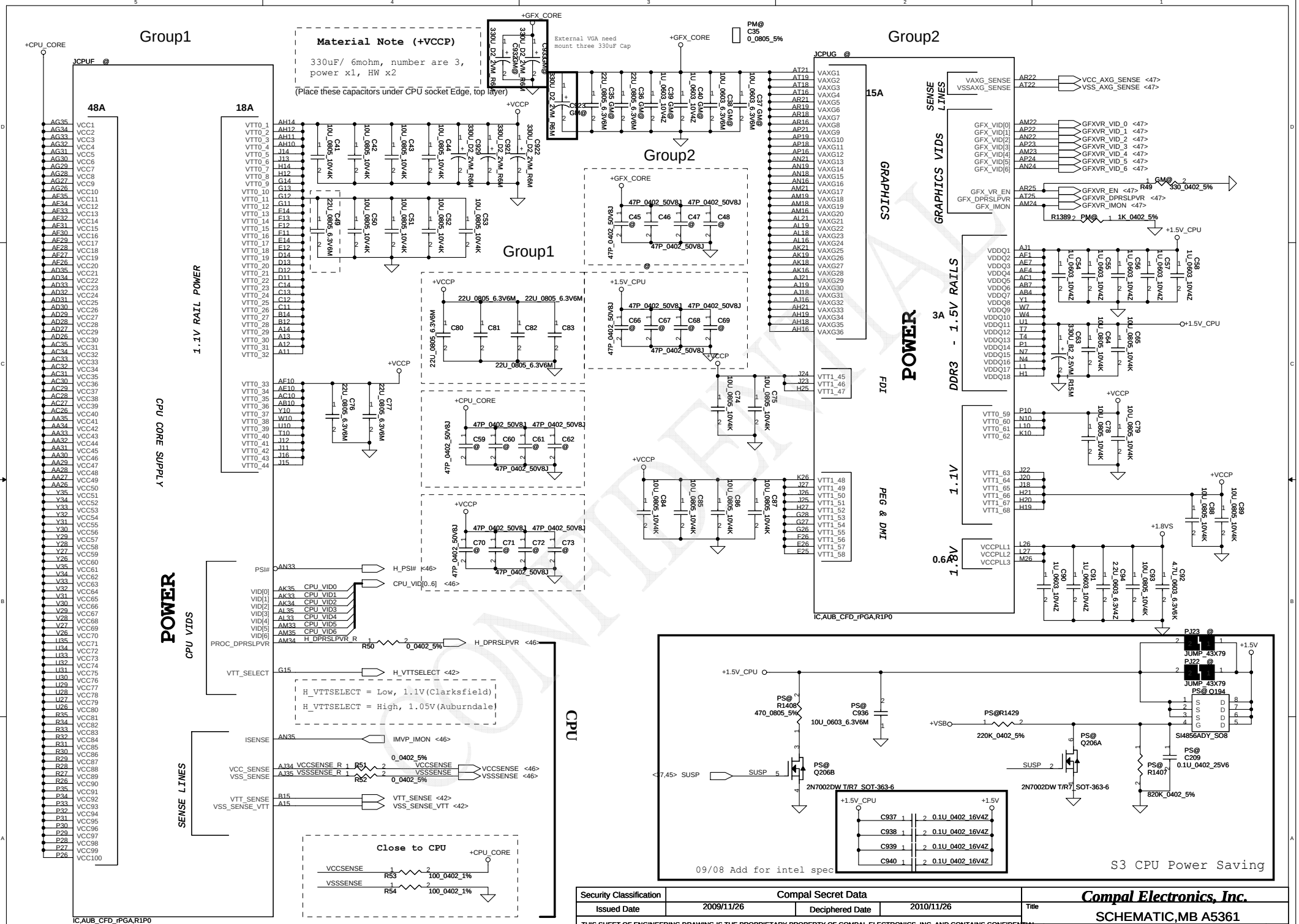

Security Classification	Compal Secret Data		
Issued Date	2009/11/26	Deciphered Date	2010/11/26

THIS SHEET OF ENGINEERING DRAWING IS THE PROPRIETARY PROPERTY OF COMPAL ELECTRONICS, INC. AND CONTAINS CONFIDENTIAL AND TRADE SECRET INFORMATION. THIS SHEET MAY NOT BE TRANSFERED FROM THE CUSTODY OF THE COMPETENT DIVISION OF R&D DEPARTMENT EXCEPT AS AUTHORIZED BY COMPAL ELECTRONICS, INC. NEITHER THIS SHEET NOR THE INFORMATION IT CONTAINS MAY BE USED BY OR DISCLOSED TO ANY THIRD PARTY WITHOUT PRIOR WRITTEN CONSENT OF COMPAL ELECTRONICS, INC.

Compal Electronics, Inc.

Title: SCHEMATIC,MB A5361

Size: Custom | Document Number: 401715 | Rev: B

Date: Monday, January 11, 2010 | Sheet 8 of 52

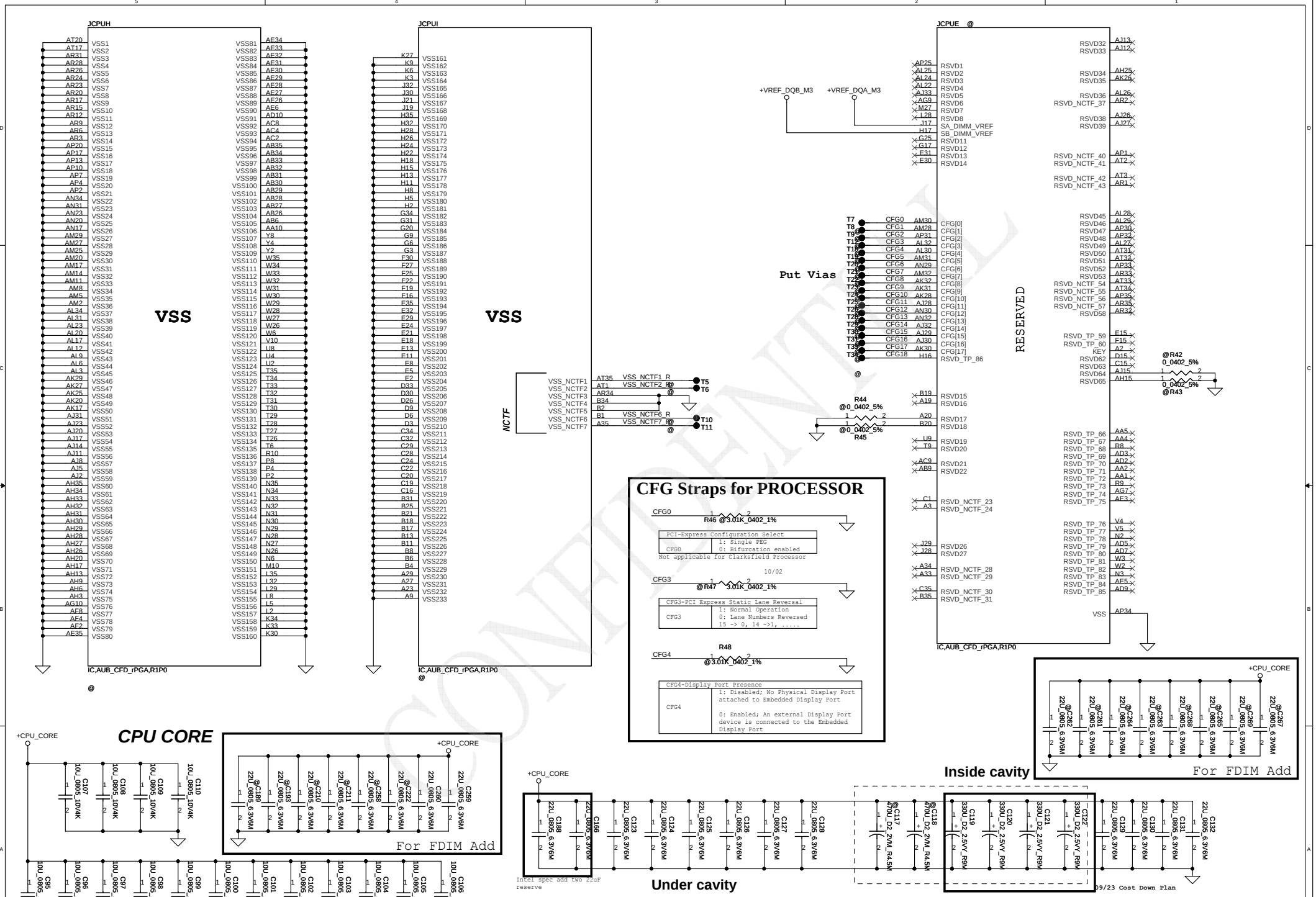

CONFIDENTIAL

Security Classification	Compal Secret Data		
Issued Date	2009/11/26	Deciphered Date	2010/11/26

THIS SHEET OF ENGINEERING DRAWING IS THE PROPRIETARY PROPERTY OF COMPAL ELECTRONICS, INC. AND CONTAINS CONFIDENTIAL AND TRADE SECRET INFORMATION. THIS SHEET MAY NOT BE TRANSFERRED FROM THE CUSTODY OF THE COMPETENT DIVISION OF R&D DEPARTMENT EXCEPT AS AUTHORIZED BY COMPAL ELECTRONICS, INC. NEITHER THIS SHEET NOR THE INFORMATION IT CONTAINS MAY BE USED BY OR DISCLOSED TO ANY THIRD PARTY WITHOUT PRIOR WRITTEN CONSENT OF COMPAL ELECTRONICS, INC.

Compal Electronics, Inc.

Title: SCHEMATIC,MB A5361

Size: Custom | Document Number: 401715 | Rev: B

Date: Monday, January 11, 2010 | Sheet 9 of 52

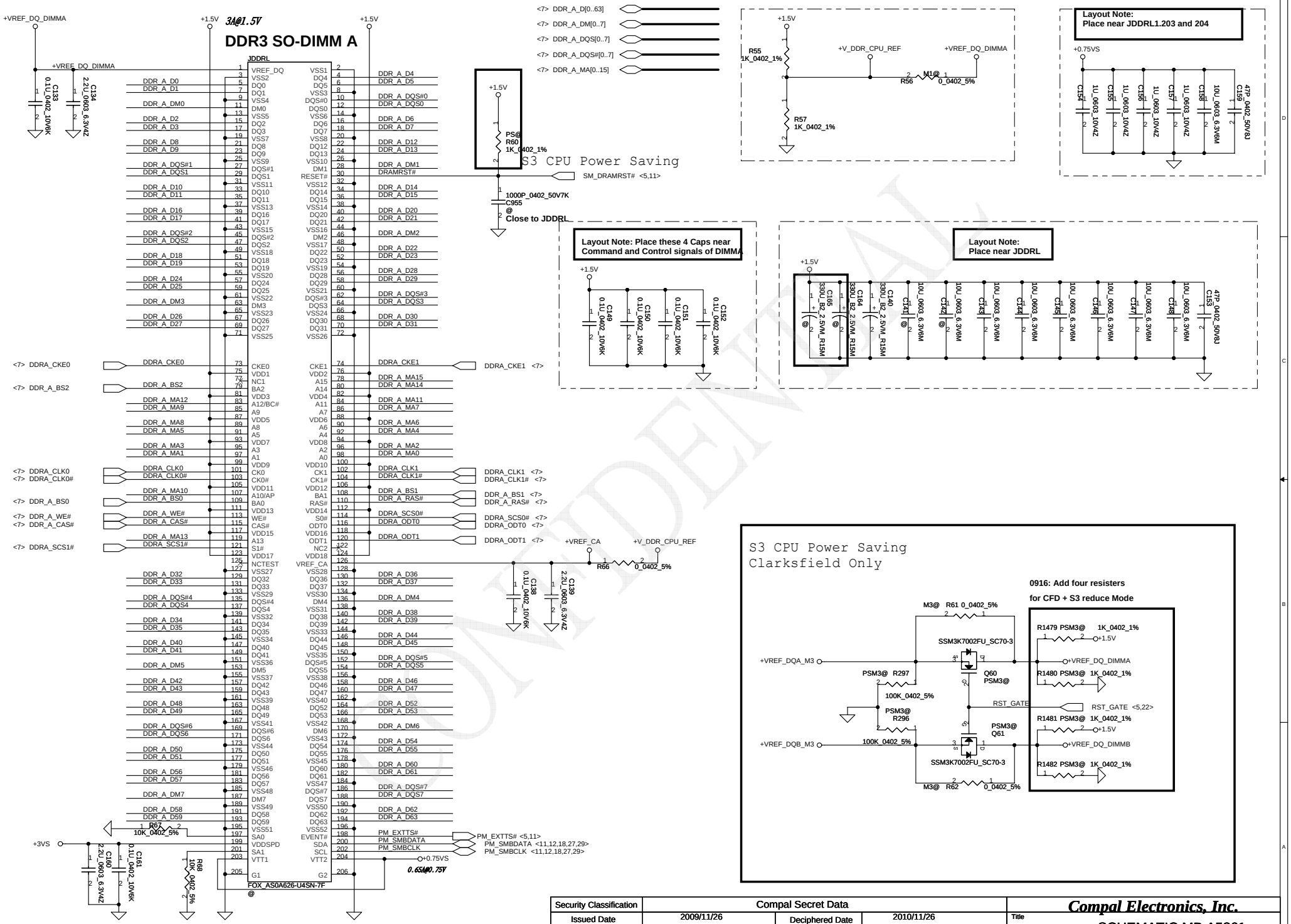

CONFIDENTIAL

Security Classification	Compal Secret Data		
Issued Date	2009/11/26	Deciphered Date	2010/11/26

THIS SHEET OF ENGINEERING DRAWING IS THE PROPRIETARY PROPERTY OF COMPAL ELECTRONICS, INC. AND CONTAINS CONFIDENTIAL AND TRADE SECRET INFORMATION. THIS SHEET MAY NOT BE TRANSFERED FROM THE CUSTODY OF THE COMPETENT DIVISION OF R&D DEPARTMENT EXCEPT AS AUTHORIZED BY COMPAL ELECTRONICS, INC. NEITHER THIS SHEET NOR THE INFORMATION IT CONTAINS MAY BE USED BY OR DISCLOSED TO ANY THIRD PARTY WITHOUT PRIOR WRITTEN CONSENT OF COMPAL ELECTRONICS, INC.

Compal Electronics, Inc.

Title: SCHEMATIC,MB A5361

Size: Custom | Document Number: 401715 | Rev: B

Date: Monday, January 11, 2010 | Sheet 10 of 52

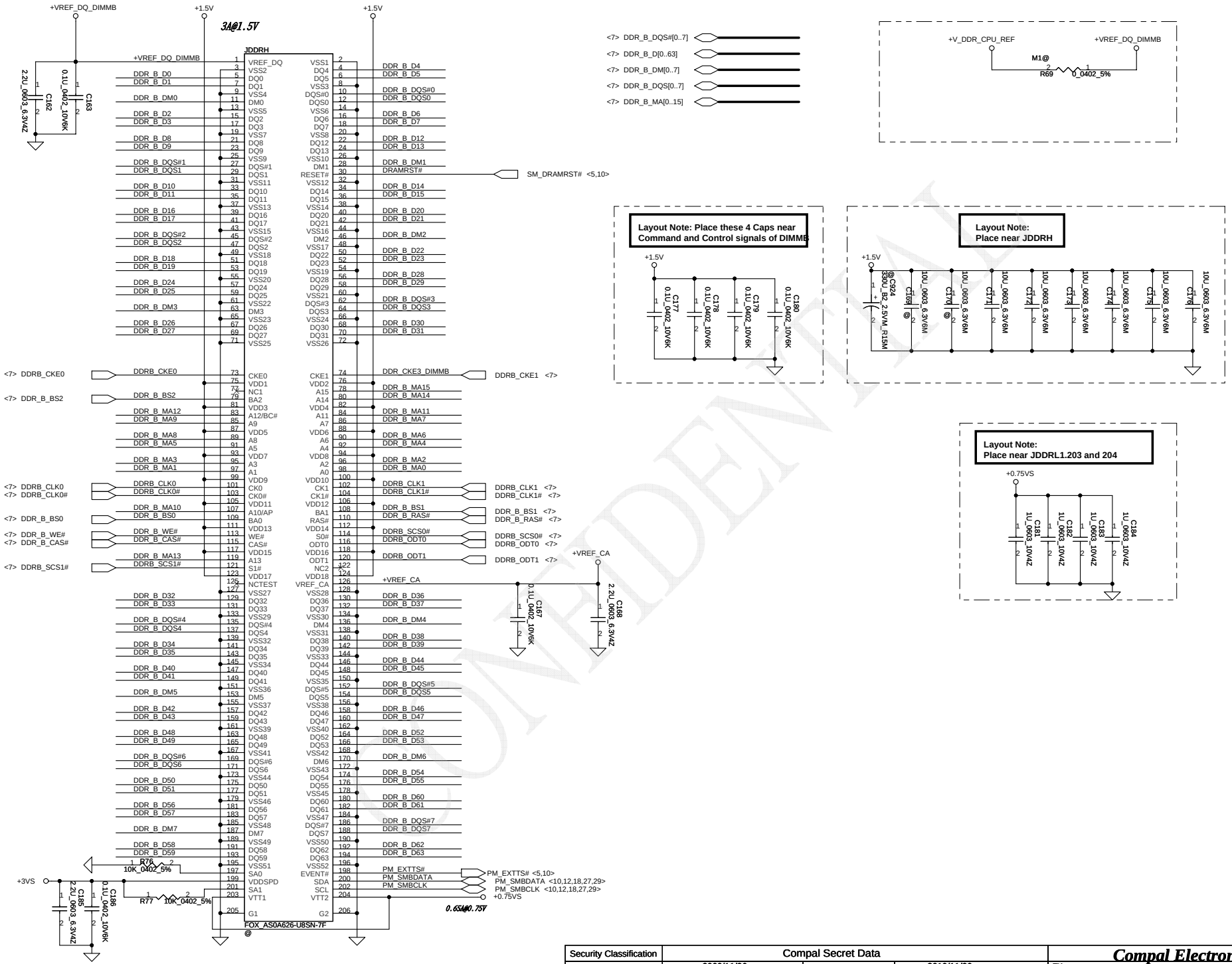

BOT SLOT

Security Classification	Compal Secret Data		
Issued Date	2009/11/26	Deciphered Date	2010/11/26

THIS SHEET OF ENGINEERING DRAWING IS THE PROPRIETARY PROPERTY OF COMPAL ELECTRONICS, INC. AND CONTAINS CONFIDENTIAL AND TRADE SECRET INFORMATION. THIS SHEET MAY NOT BE TRANSFERED FROM THE CUSTODY OF THE COMPETENT DIVISION OF R&D DEPARTMENT EXCEPT AS AUTHORIZED BY COMPAL ELECTRONICS, INC. NEITHER THIS SHEET NOR THE INFORMATION IT CONTAINS MAY BE USED BY OR DISCLOSED TO ANY THIRD PARTY WITHOUT PRIOR WRITTEN CONSENT OF COMPAL ELECTRONICS, INC.

Compal Electronics, Inc.

Title: SCHEMATIC,MB A5361

Size | Document Number: 401715 | Rev: B

Date: Monday, January 11, 2010 | Sheet 11 of 52

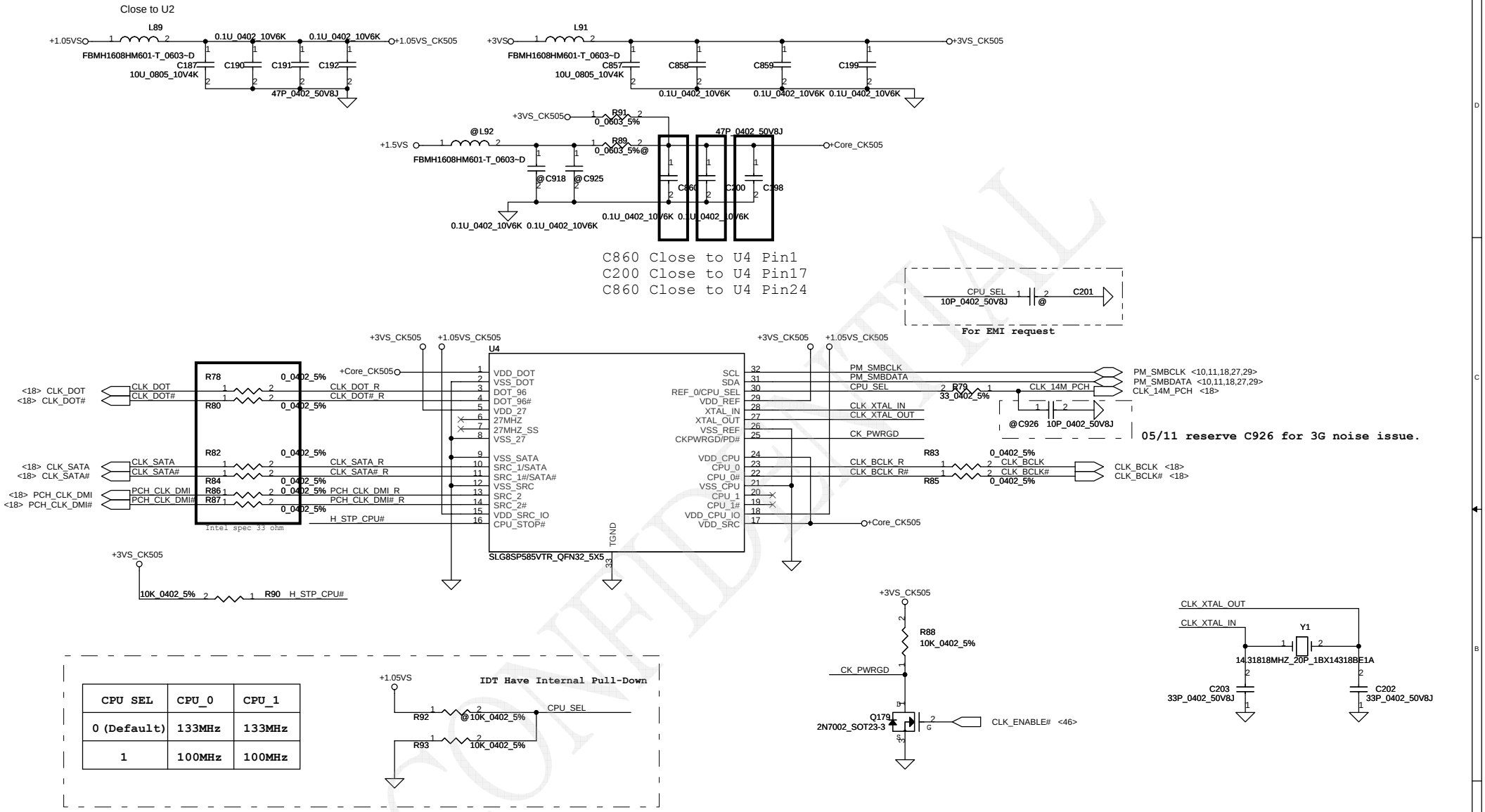

CPU SEL	CPU_0	CPU_1
0 (Default)	133MHz	133MHz
1	100MHz	100MHz

CONFIDENTIAL

Security Classification	Compal Secret Data		
Issued Date	2009/11/26	Deciphered Date	2010/11/26

THIS SHEET OF ENGINEERING DRAWING IS THE PROPRIETARY PROPERTY OF COMPAL ELECTRONICS, INC. AND CONTAINS CONFIDENTIAL AND TRADE SECRET INFORMATION. THIS SHEET MAY NOT BE TRANSFERED FROM THE CUSTODY OF THE COMPETENT DIVISION OF R&D DEPARTMENT EXCEPT AS AUTHORIZED BY COMPAL ELECTRONICS, INC. NEITHER THIS SHEET NOR THE INFORMATION IT CONTAINS MAY BE USED BY OR DISCLOSED TO ANY THIRD PARTY WITHOUT PRIOR WRITTEN CONSENT OF COMPAL ELECTRONICS, INC.

Compal Electronics, Inc.

Title: SCHEMATIC,MB A5361

Size | Document Number: 401715 | Rev: B

Date: Monday, January 11, 2010 | Sheet 12 of 52

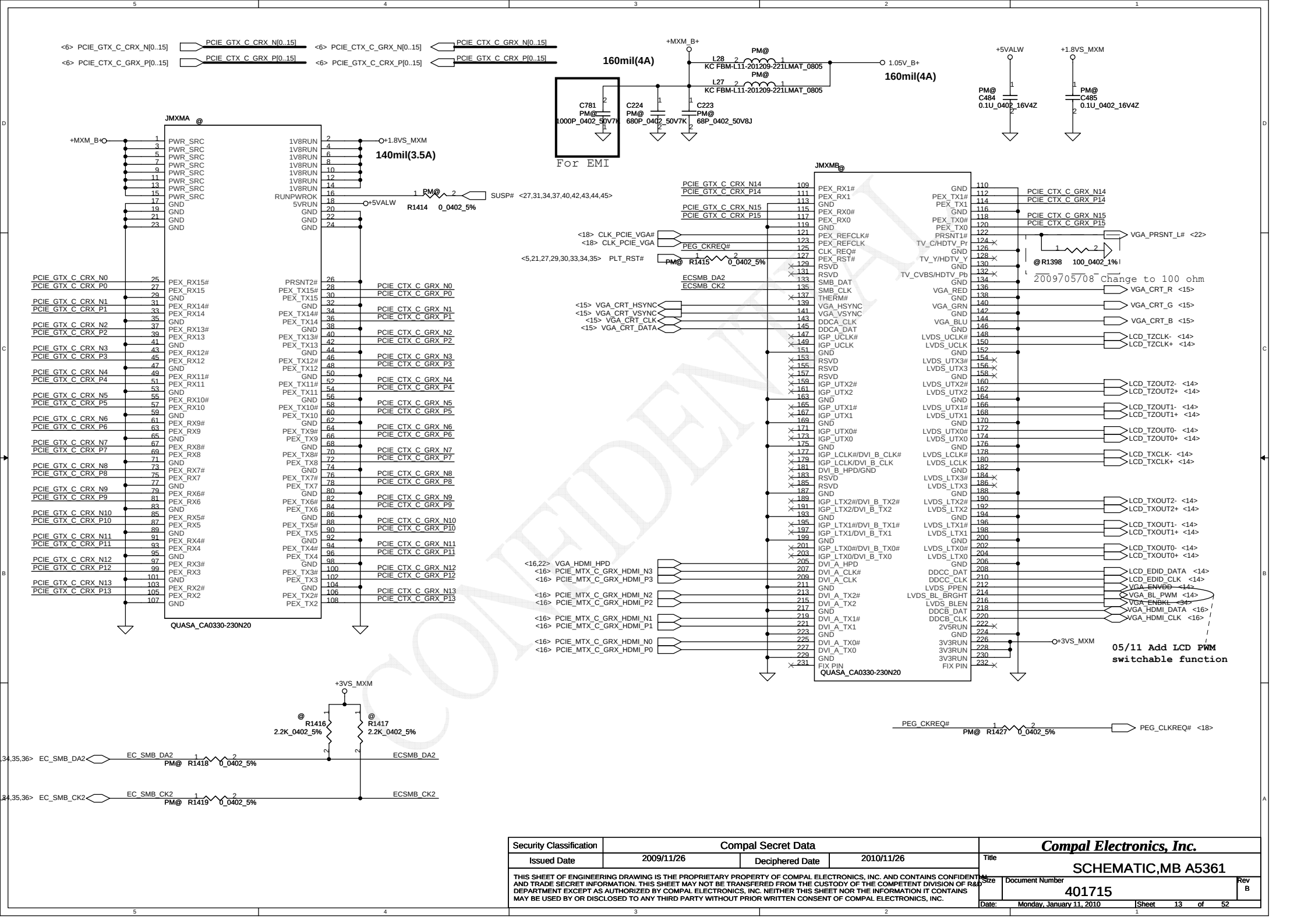

Security Classification	Compal Secret Data		
Issued Date	2009/11/26	Deciphered Date	2010/11/26

THIS SHEET OF ENGINEERING DRAWING IS THE PROPRIETARY PROPERTY OF COMPAL ELECTRONICS, INC. AND CONTAINS CONFIDENTIAL AND TRADE SECRET INFORMATION. THIS SHEET MAY NOT BE TRANSFERED FROM THE CUSTODY OF THE COMPETENT DIVISION OF R&D DEPARTMENT EXCEPT AS AUTHORIZED BY COMPAL ELECTRONICS, INC. NEITHER THIS SHEET NOR THE INFORMATION IT CONTAINS MAY BE USED BY OR DISCLOSED TO ANY THIRD PARTY WITHOUT PRIOR WRITTEN CONSENT OF COMPAL ELECTRONICS, INC.

Compal Electronics, Inc.

Title: SCHEMATIC,MB A5361

Size | Document Number: 401715 | Rev: B

Date: Monday, January 11, 2010 | Sheet 13 of 52

LCD/PANEL BD. Conn.

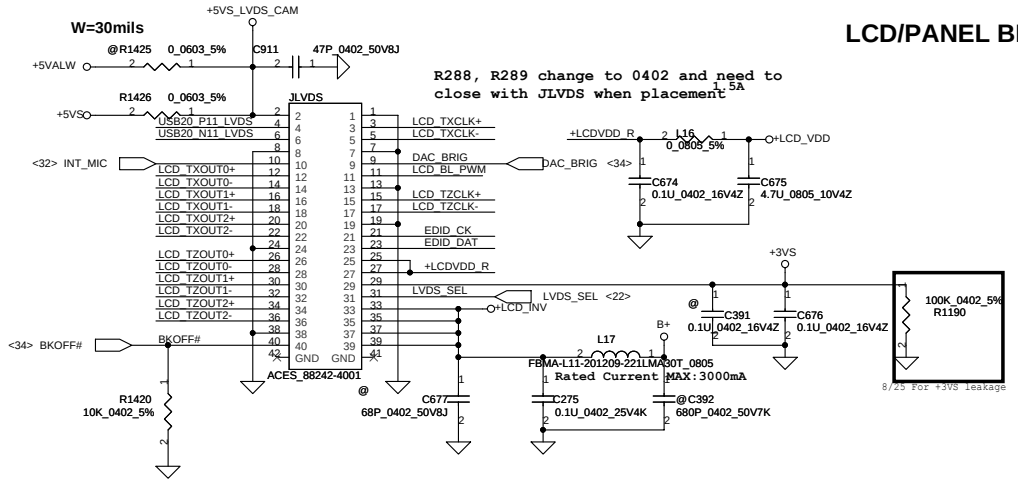

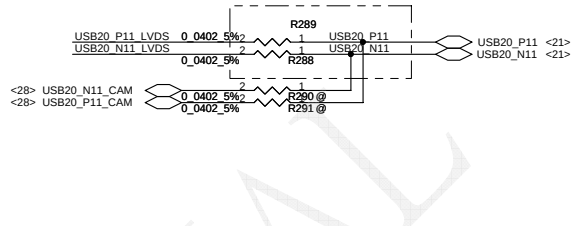

Please near MXM conn for these resisters.

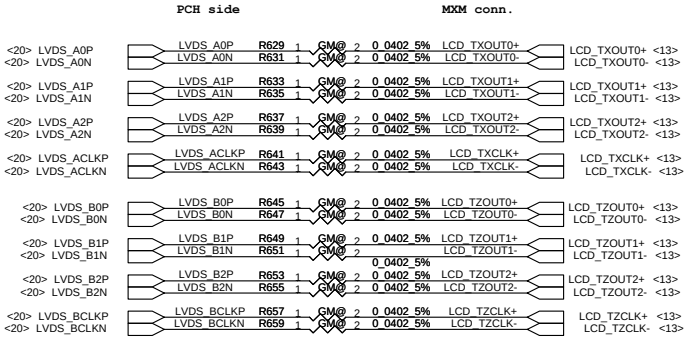

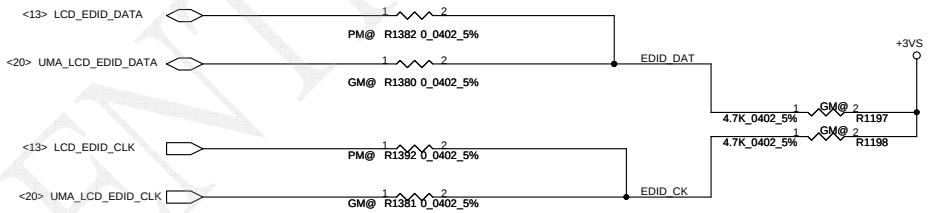

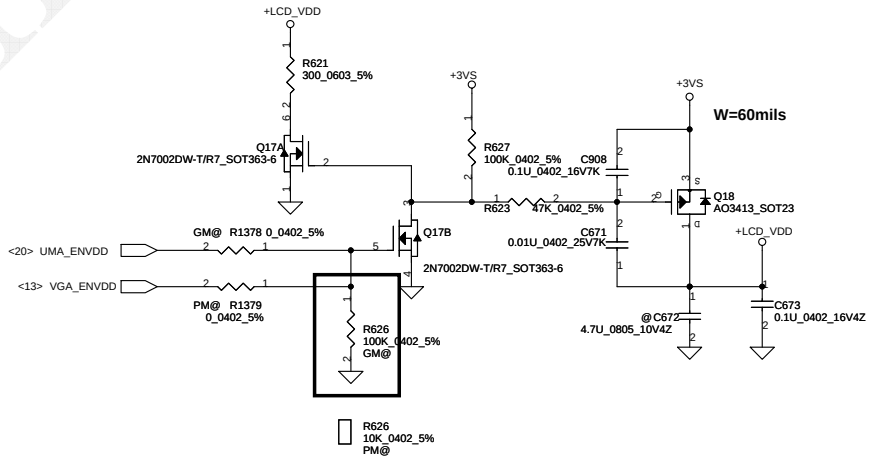

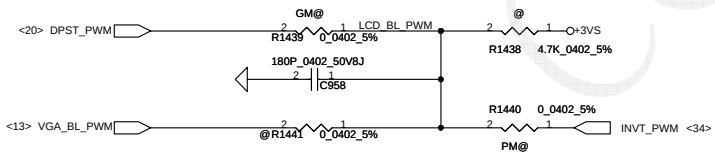

CONFIDENTIAL

Security Classification	Compal Secret Data			Compal Electronics, Inc.
Issued Date	2009/11/26	Deciphered Date	2010/11/26	Title: SCHEMATIC,MB A5361
THIS SHEET OF ENGINEERING DRAWING IS THE PROPRIETARY PROPERTY OF COMPAL ELECTRONICS, INC. AND CONTAINS CONFIDENTIAL AND TRADE SECRET INFORMATION. THIS SHEET MAY NOT BE TRANSFERED FROM THE CUSTODY OF THE COMPETENT DIVISION OF R&D DEPARTMENT EXCEPT AS AUTHORIZED BY COMPAL ELECTRONICS, INC. NEITHER THIS SHEET NOR THE INFORMATION IT CONTAINS MAY BE USED BY OR DISCLOSED TO ANY THIRD PARTY WITHOUT PRIOR WRITTEN CONSENT OF COMPAL ELECTRONICS, INC.				Size: Document Number: 401715 Rev: B
				Date: Monday, January 11, 2010 Sheet 14 of 52

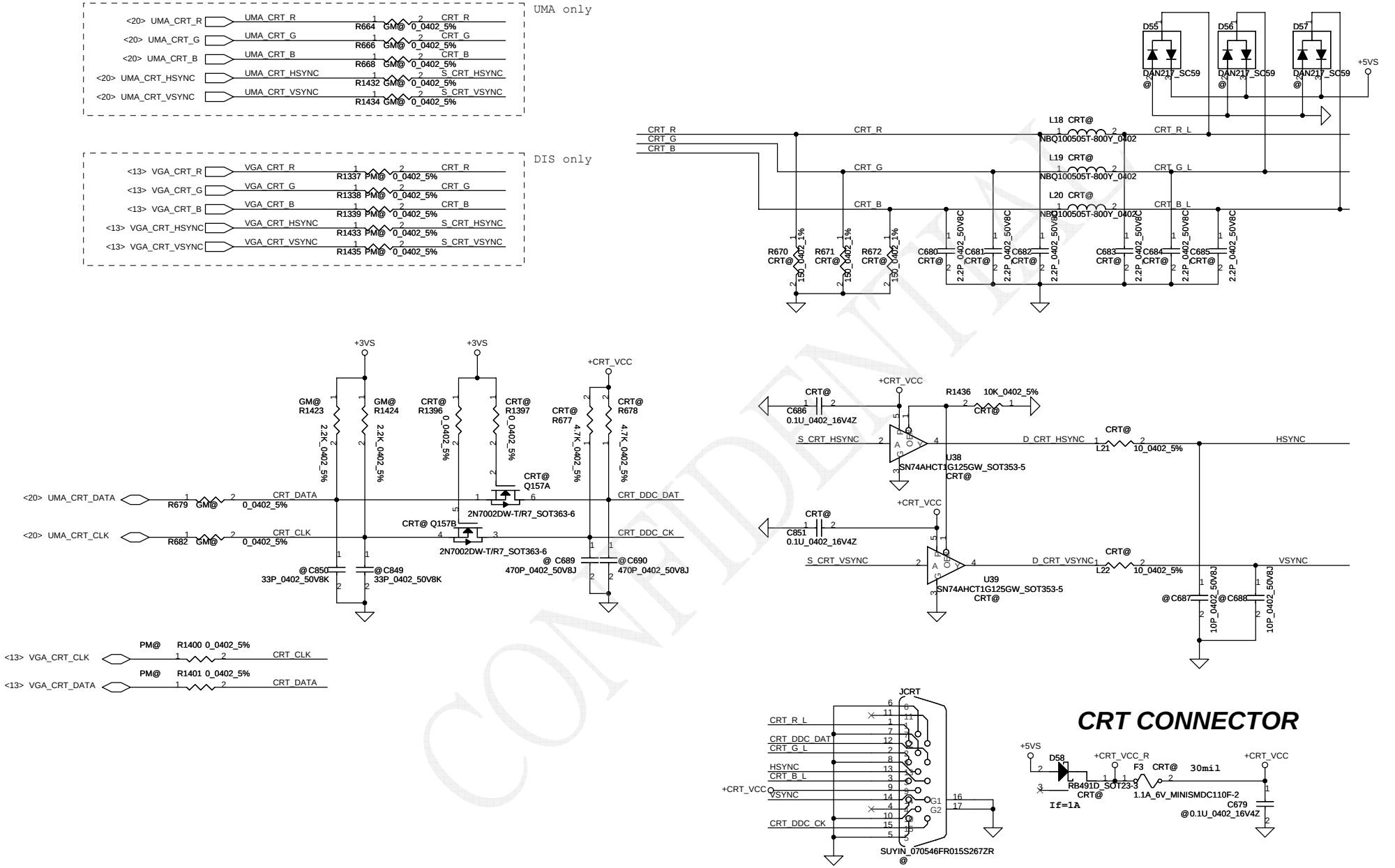

CONFIDENTIAL

Security Classification	Compal Secret Data		
Issued Date	2009/11/26	Deciphered Date	2010/11/26

THIS SHEET OF ENGINEERING DRAWING IS THE PROPRIETARY PROPERTY OF COMPAL ELECTRONICS, INC. AND CONTAINS CONFIDENTIAL AND TRADE SECRET INFORMATION. THIS SHEET MAY NOT BE TRANSFERED FROM THE CUSTODY OF THE COMPETENT DIVISION OF R&D DEPARTMENT EXCEPT AS AUTHORIZED BY COMPAL ELECTRONICS, INC. NEITHER THIS SHEET NOR THE INFORMATION IT CONTAINS MAY BE USED BY OR DISCLOSED TO ANY THIRD PARTY WITHOUT PRIOR WRITTEN CONSENT OF COMPAL ELECTRONICS, INC.

Compal Electronics, Inc.

Title: SCHEMATIC,MB A5361

Size | Document Number: 401715 | Rev: B

Date: Monday, January 11, 2010 | Sheet 15 of 52

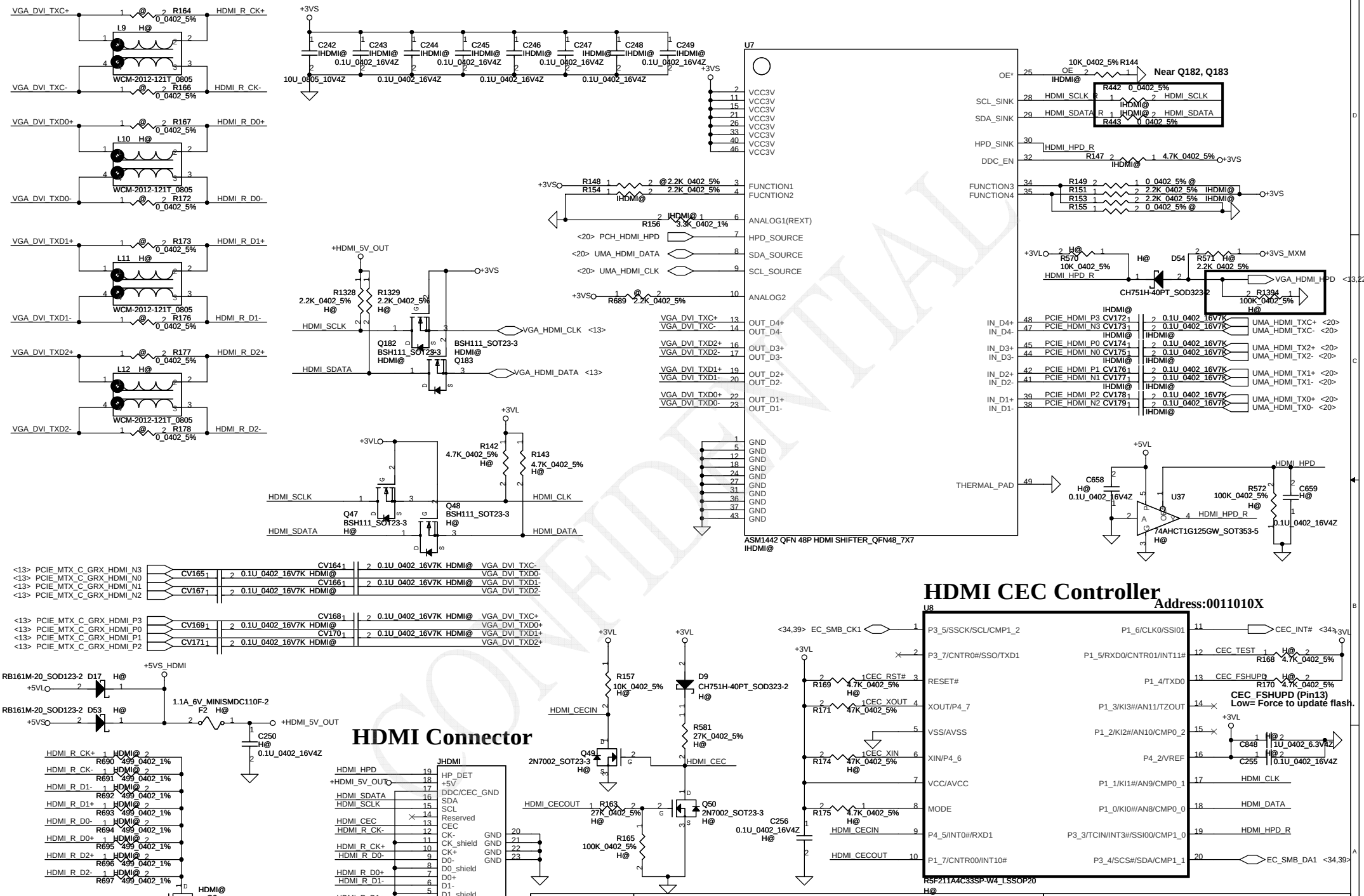

CONFIDENTIAL

Security Classification	Compal Secret Data		
Issued Date	2009/11/26	Deciphered Date	2010/11/26

THIS SHEET OF ENGINEERING DRAWING IS THE PROPRIETARY PROPERTY OF COMPAL ELECTRONICS, INC. AND CONTAINS CONFIDENTIAL AND TRADE SECRET INFORMATION. THIS SHEET MAY NOT BE TRANSFERRED FROM THE CUSTODY OF THE COMPETENT DIVISION OF R&D DEPARTMENT EXCEPT AS AUTHORIZED BY COMPAL ELECTRONICS, INC. NEITHER THIS SHEET NOR THE INFORMATION IT CONTAINS MAY BE USED BY OR DISCLOSED TO ANY THIRD PARTY WITHOUT PRIOR WRITTEN CONSENT OF COMPAL ELECTRONICS, INC.

Compal Electronics, Inc.

Title: SCHEMATIC,MB A5361

Size | Document Number: 401715 | Rev: B

Date: Monday, January 11, 2010 | Sheet 16 of 52

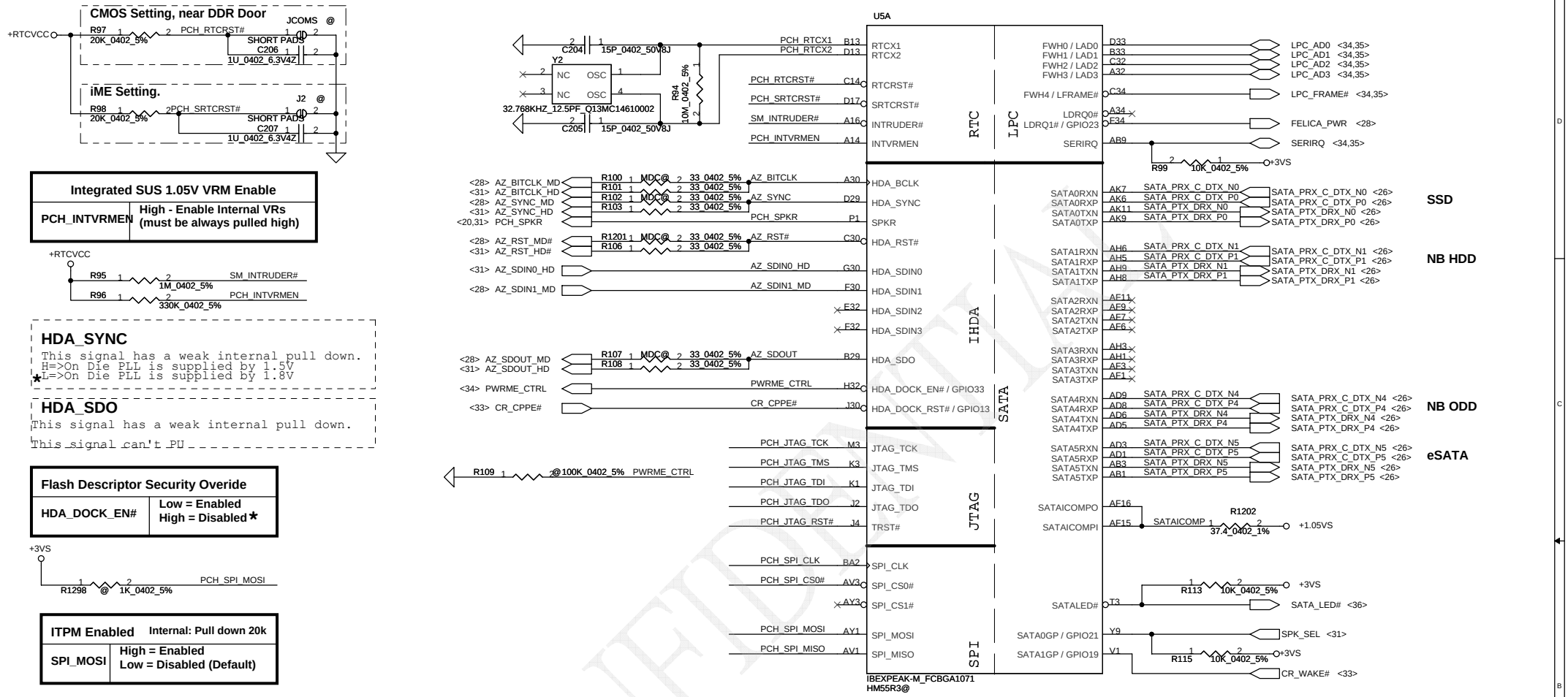

PCH Pin	RefDes	PCH JTAG Enable ES1	PCH JTAG Enable ES2	PCH JTAG Disable ES1	PCH JTAG Disable ES2
PCH_JTAG_TDO	R358	No Install	200ohm	No Install	No Install
	R535	No Install	100ohm	No Install	No Install
PCH_JTAG_TMS	R355	200ohm	200ohm	No Install	No Install
	R354	100ohm	100ohm	No Install	No Install
PCH_JTAG_TDI	R536	200ohm	200ohm	20Kohm	No Install
	R537	100ohm	100ohm	10Kohm	No Install
PCH_JTAG_TCK	R156	51ohm	51ohm	51ohm	51ohm
PCH_JTAG_RST#	R643	20Kohm	20Kohm	No Install	No Install
	R353	10Kohm	10Kohm	No Install	No Install

CONFIDENTIAL

Security Classification	Compal Secret Data		
Issued Date	2009/11/26	Deciphered Date	2010/11/26

THIS SHEET OF ENGINEERING DRAWING IS THE PROPRIETARY PROPERTY OF COMPAL ELECTRONICS, INC. AND CONTAINS CONFIDENTIAL AND TRADE SECRET INFORMATION. THIS SHEET MAY NOT BE TRANSFERED FROM THE CUSTODY OF THE COMPETENT DIVISION OF R&D DEPARTMENT EXCEPT AS AUTHORIZED BY COMPAL ELECTRONICS, INC. NEITHER THIS SHEET NOR THE INFORMATION IT CONTAINS MAY BE USED BY OR DISCLOSED TO ANY THIRD PARTY WITHOUT PRIOR WRITTEN CONSENT OF COMPAL ELECTRONICS, INC.

Compal Electronics, Inc.

Title: SCHEMATIC,MB A5361

Size: Custom | Document Number: 401715 | Rev: B

Date: Monday, January 11, 2010 | Sheet 17 of 52

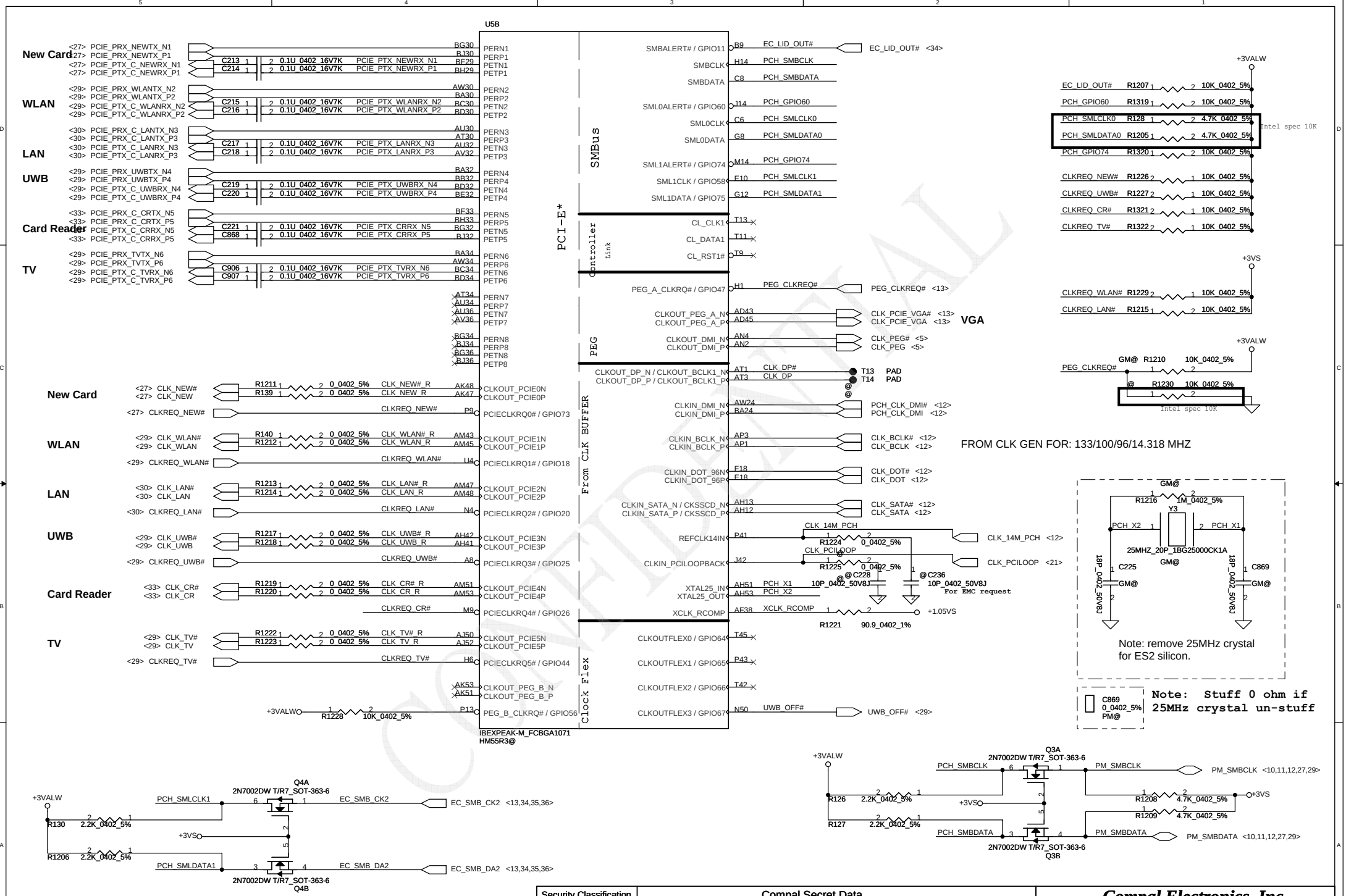

Security Classification	Compal Secret Data		
Issued Date	2009/11/26	Deciphered Date	2010/11/26

THIS SHEET OF ENGINEERING DRAWING IS THE PROPRIETARY PROPERTY OF COMPAL ELECTRONICS, INC. AND CONTAINS CONFIDENTIAL AND TRADE SECRET INFORMATION. THIS SHEET MAY NOT BE TRANSFERED FROM THE CUSTODY OF THE COMPETENT DIVISION OF R&D DEPARTMENT EXCEPT AS AUTHORIZED BY COMPAL ELECTRONICS, INC. NEITHER THIS SHEET NOR THE INFORMATION IT CONTAINS MAY BE USED BY OR DISCLOSED TO ANY THIRD PARTY WITHOUT PRIOR WRITTEN CONSENT OF COMPAL ELECTRONICS, INC.

Compal Electronics, Inc.

Title: SCHEMATIC,MB A5361

Size: Custom | Document Number: 401715 | Rev: B

Date: Monday, January 11, 2010 | Sheet 18 of 52

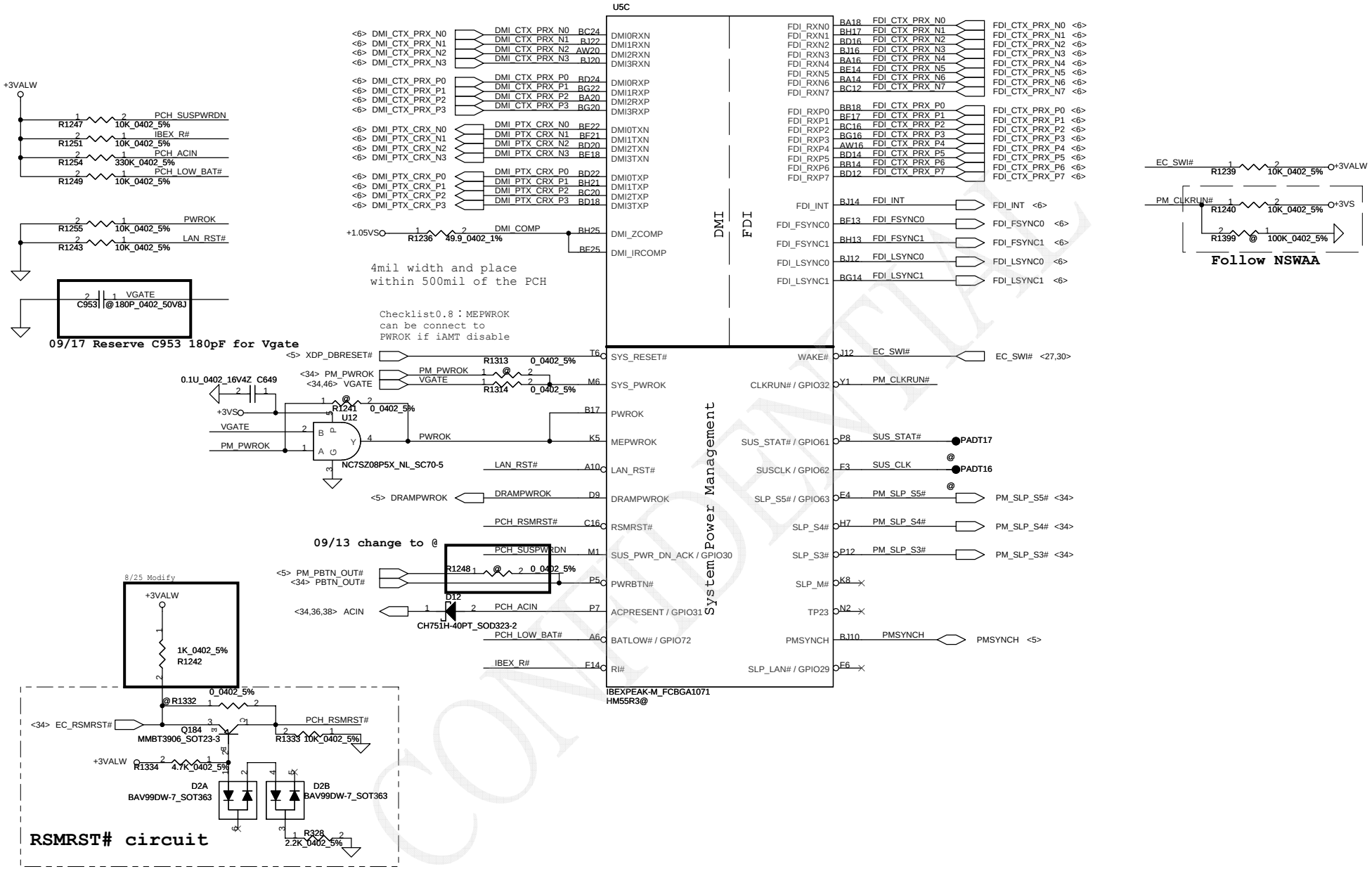

CONFIDENTIAL

Security Classification	Compal Secret Data		
Issued Date	2009/11/26	Deciphered Date	2010/11/26

THIS SHEET OF ENGINEERING DRAWING IS THE PROPRIETARY PROPERTY OF COMPAL ELECTRONICS, INC. AND CONTAINS CONFIDENTIAL AND TRADE SECRET INFORMATION. THIS SHEET MAY NOT BE TRANSFERED FROM THE CUSTODY OF THE COMPETENT DIVISION OF R&D DEPARTMENT EXCEPT AS AUTHORIZED BY COMPAL ELECTRONICS, INC. NEITHER THIS SHEET NOR THE INFORMATION IT CONTAINS MAY BE USED BY OR DISCLOSED TO ANY THIRD PARTY WITHOUT PRIOR WRITTEN CONSENT OF COMPAL ELECTRONICS, INC.

Compal Electronics, Inc.

Title: SCHEMATIC,MB A5361

Size: Custom | Document Number: 401715 | Rev: B

Date: Monday, January 11, 2010 | Sheet 19 of 52

05/11 Add LCD PWM switchable function

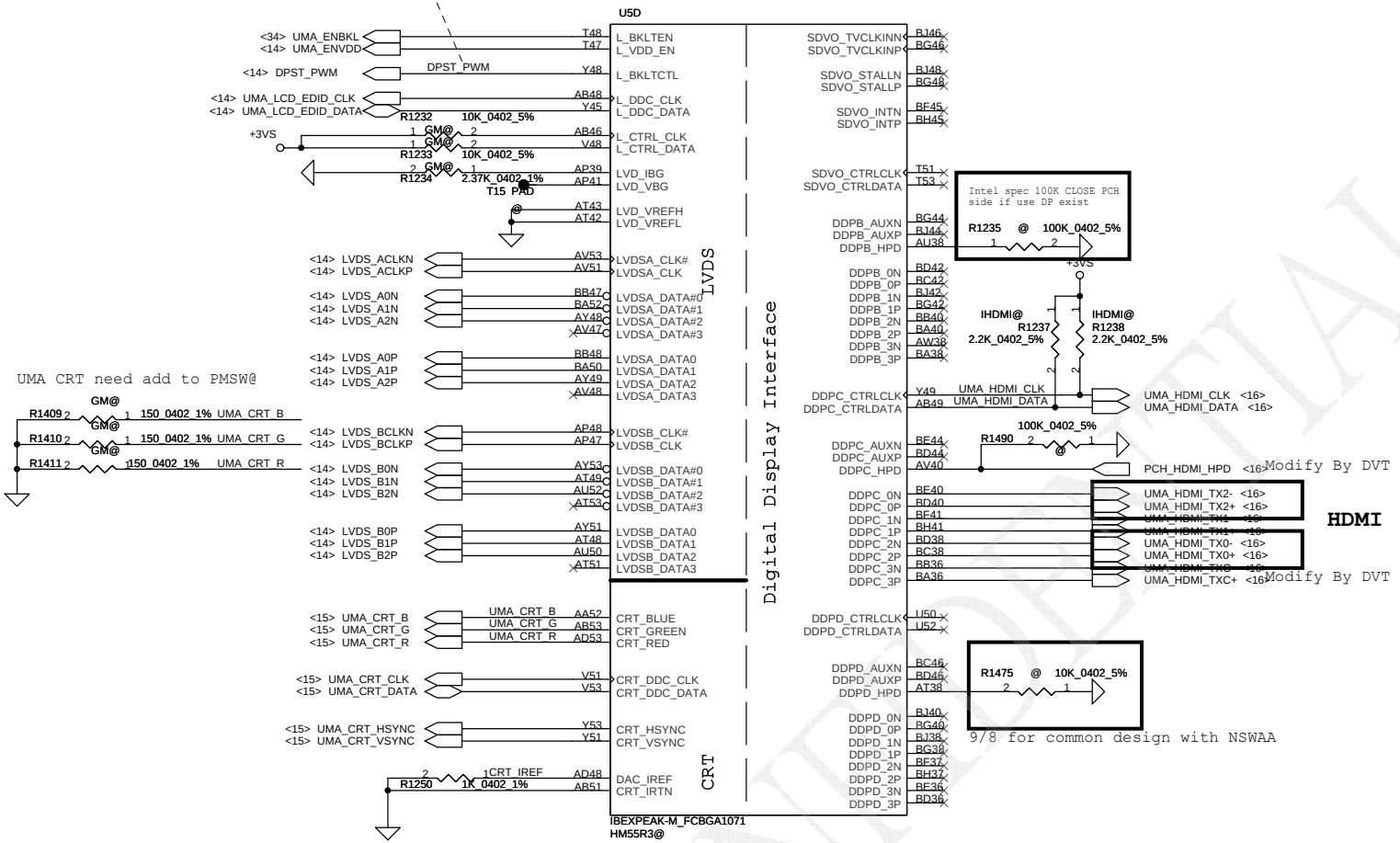

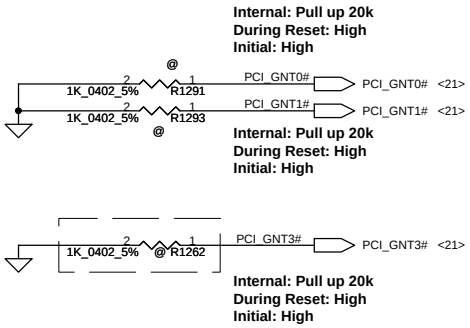

Boot BIOS Strap		
PCI_GNT#1	PCI_GNT#0	Boot BIOS Loaction
0	0	LPC (Default)
0	1	Reserved (NAND)
1	0	PCI
1	1	SPI

A16 Swap Override Strap	
PCI_GNT#3	Low= A16 swap override Enable High= A16 swap override Disable

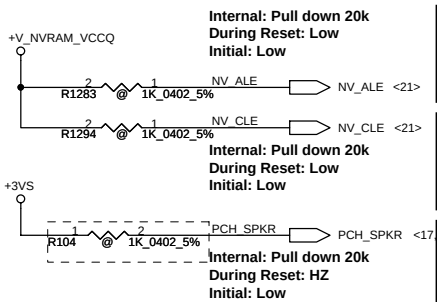

Danbury Technology Enabled	
NV_ALE	High = Enabled Low = Disabled (Default)

DMI Termination Voltage	
NV_CLE	Low= Set to Vss (Default) High= Set to Vcc

NO REBOOT Strap	
PCH_SPKR	Low= Disable High= Enable

CONFIDENTIAL

Security Classification	Compal Secret Data		
Issued Date	2009/11/26	Deciphered Date	2010/11/26

THIS SHEET OF ENGINEERING DRAWING IS THE PROPRIETARY PROPERTY OF COMPAL ELECTRONICS, INC. AND CONTAINS CONFIDENTIAL AND TRADE SECRET INFORMATION. THIS SHEET MAY NOT BE TRANSFERED FROM THE CUSTODY OF THE COMPETENT DIVISION OF R&D DEPARTMENT EXCEPT AS AUTHORIZED BY COMPAL ELECTRONICS, INC. NEITHER THIS SHEET NOR THE INFORMATION IT CONTAINS MAY BE USED BY OR DISCLOSED TO ANY THIRD PARTY WITHOUT PRIOR WRITTEN CONSENT OF COMPAL ELECTRONICS, INC.

Compal Electronics, Inc.

Title: SCHEMATIC,MB A5361

Size: Custom | Document Number: 401715 | Rev: B

Date: Monday, January 11, 2010 | Sheet 20 of 52

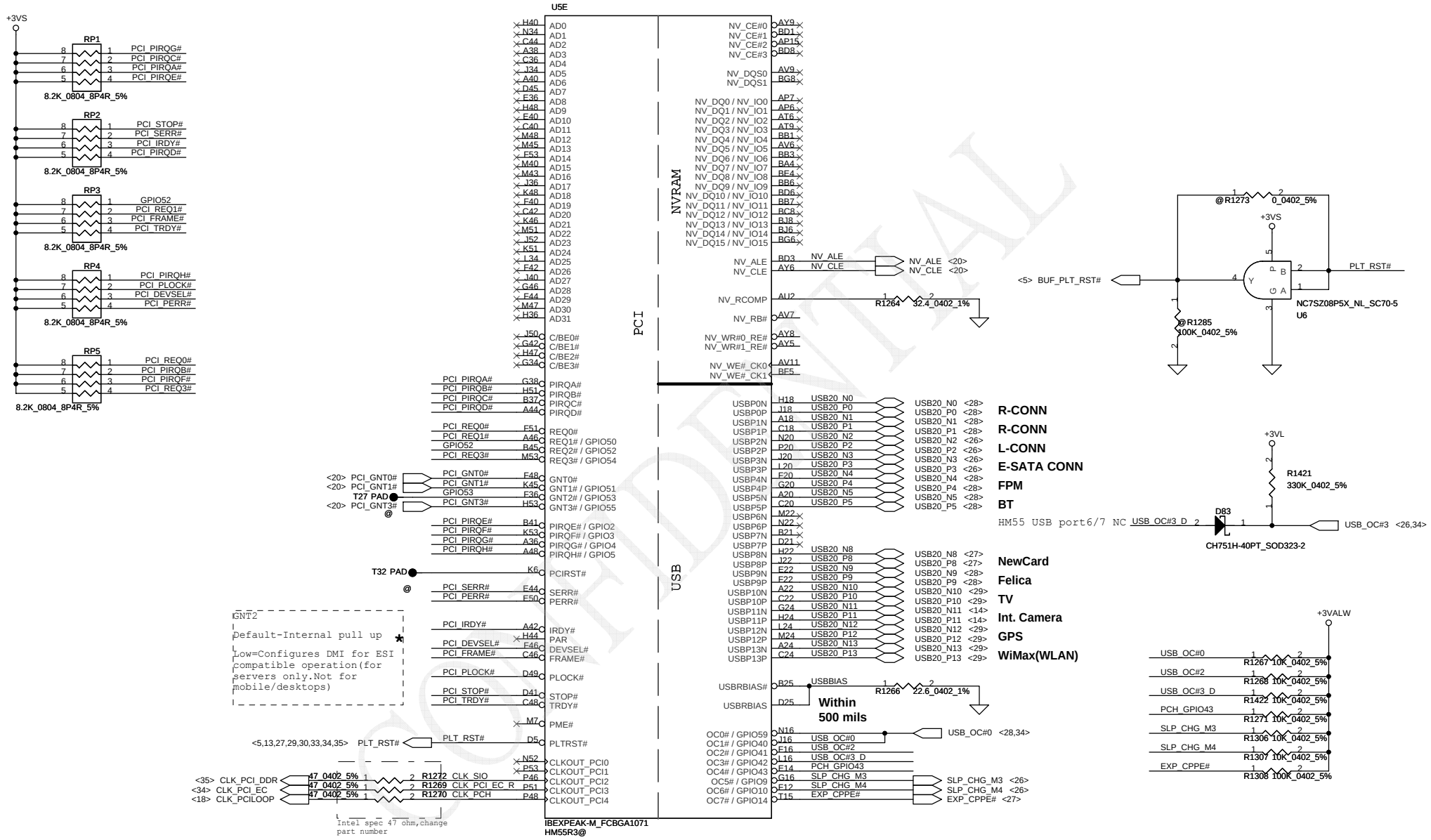

Security Classification	Compal Secret Data		
Issued Date	2009/11/26	Deciphered Date	2010/11/26

THIS SHEET OF ENGINEERING DRAWING IS THE PROPRIETARY PROPERTY OF COMPAL ELECTRONICS, INC. AND CONTAINS CONFIDENTIAL AND TRADE SECRET INFORMATION. THIS SHEET MAY NOT BE TRANSFERED FROM THE CUSTODY OF THE COMPETENT DIVISION OF R&D DEPARTMENT EXCEPT AS AUTHORIZED BY COMPAL ELECTRONICS, INC. NEITHER THIS SHEET NOR THE INFORMATION IT CONTAINS MAY BE USED BY OR DISCLOSED TO ANY THIRD PARTY WITHOUT PRIOR WRITTEN CONSENT OF COMPAL ELECTRONICS, INC.

Compal Electronics, Inc.

Title: SCHEMATIC,MB A5361

Size: Custom | Document Number: 401715 | Rev: B

Date: Monday, January 11, 2010 | Sheet 21 of 52

9/10 Add HDMI HPD to PCH in DIS SKU by SW demand

GPIO15
L : Intel ME Crypto Transport Layer Security(TLS) chiper suite with no confidentiality
H : Intel ME Crypto Transport Layer Security(TLS) chiper suite with confidentiality

it have weak internal PU 20K

GPIO27
On-Die PLL Voltage Regulator
This signal has a weak internal pull up
* H : On-Die voltage regulator enable
L : On-Die PLL Voltage Regulator disable

GPIO8
This signal has a weak internal pull up
can't Pull low

GPIO27(on-die VR)
*Enable: 1 (internal PU)
Disable: 0 (install R233)

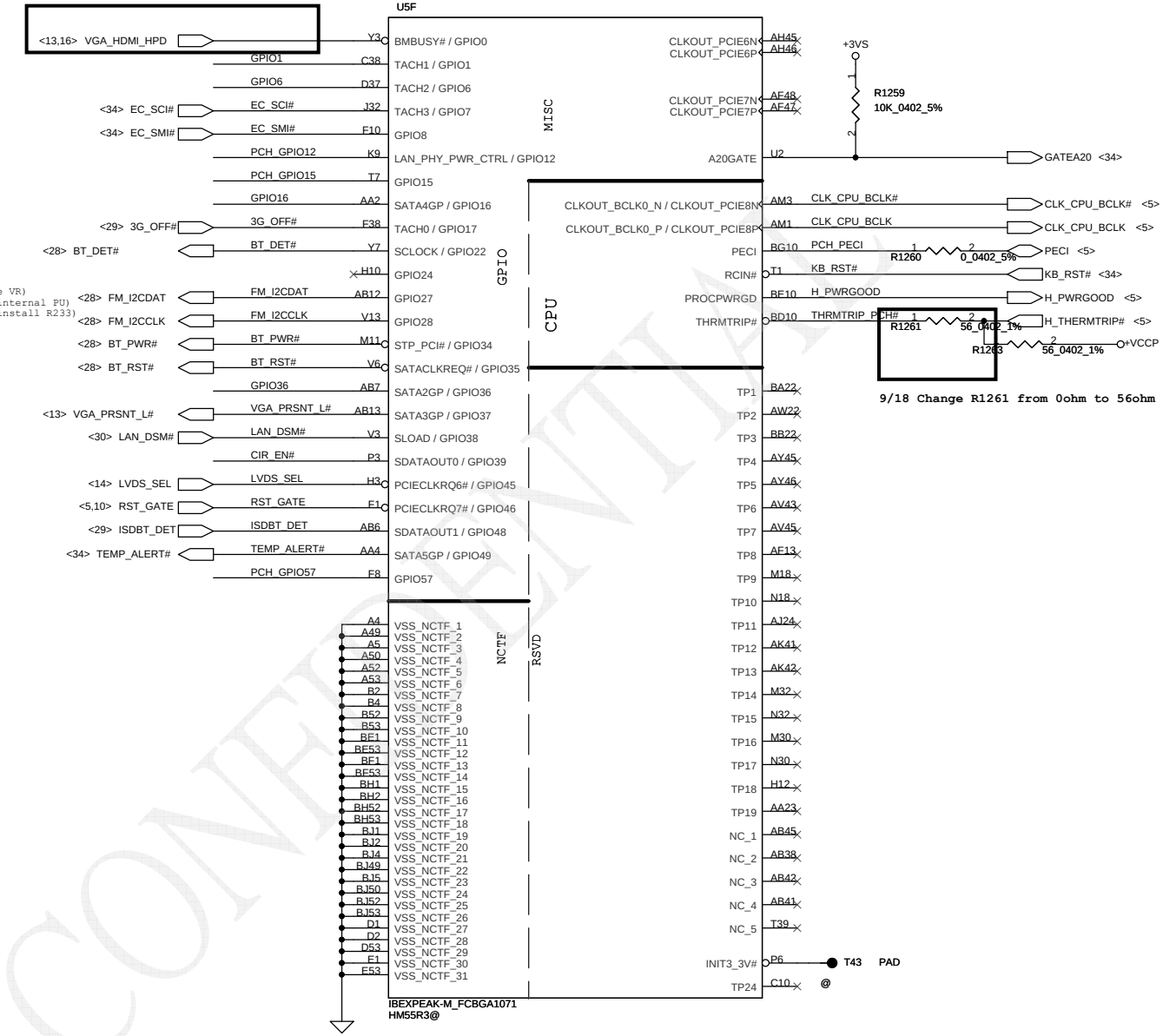

9/18 Change R1261 from 0ohm to 56ohm

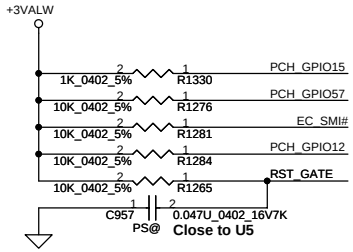

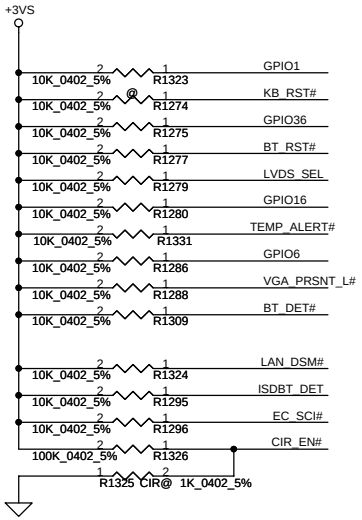

CONFIDENTIAL

Security Classification	Compal Secret Data		
Issued Date	2009/11/26	Deciphered Date	2010/11/26

THIS SHEET OF ENGINEERING DRAWING IS THE PROPRIETARY PROPERTY OF COMPAL ELECTRONICS, INC. AND CONTAINS CONFIDENTIAL AND TRADE SECRET INFORMATION. THIS SHEET MAY NOT BE TRANSFERED FROM THE CUSTODY OF THE COMPETENT DIVISION OF R&D DEPARTMENT EXCEPT AS AUTHORIZED BY COMPAL ELECTRONICS, INC. NEITHER THIS SHEET NOR THE INFORMATION IT CONTAINS MAY BE USED BY OR DISCLOSED TO ANY THIRD PARTY WITHOUT PRIOR WRITTEN CONSENT OF COMPAL ELECTRONICS, INC.

Compal Electronics, Inc.

Title: SCHEMATIC,MB A5361

Size: Custom | Document Number: 401715 | Rev: B

Date: Monday, January 11, 2010 | Sheet 22 of 52

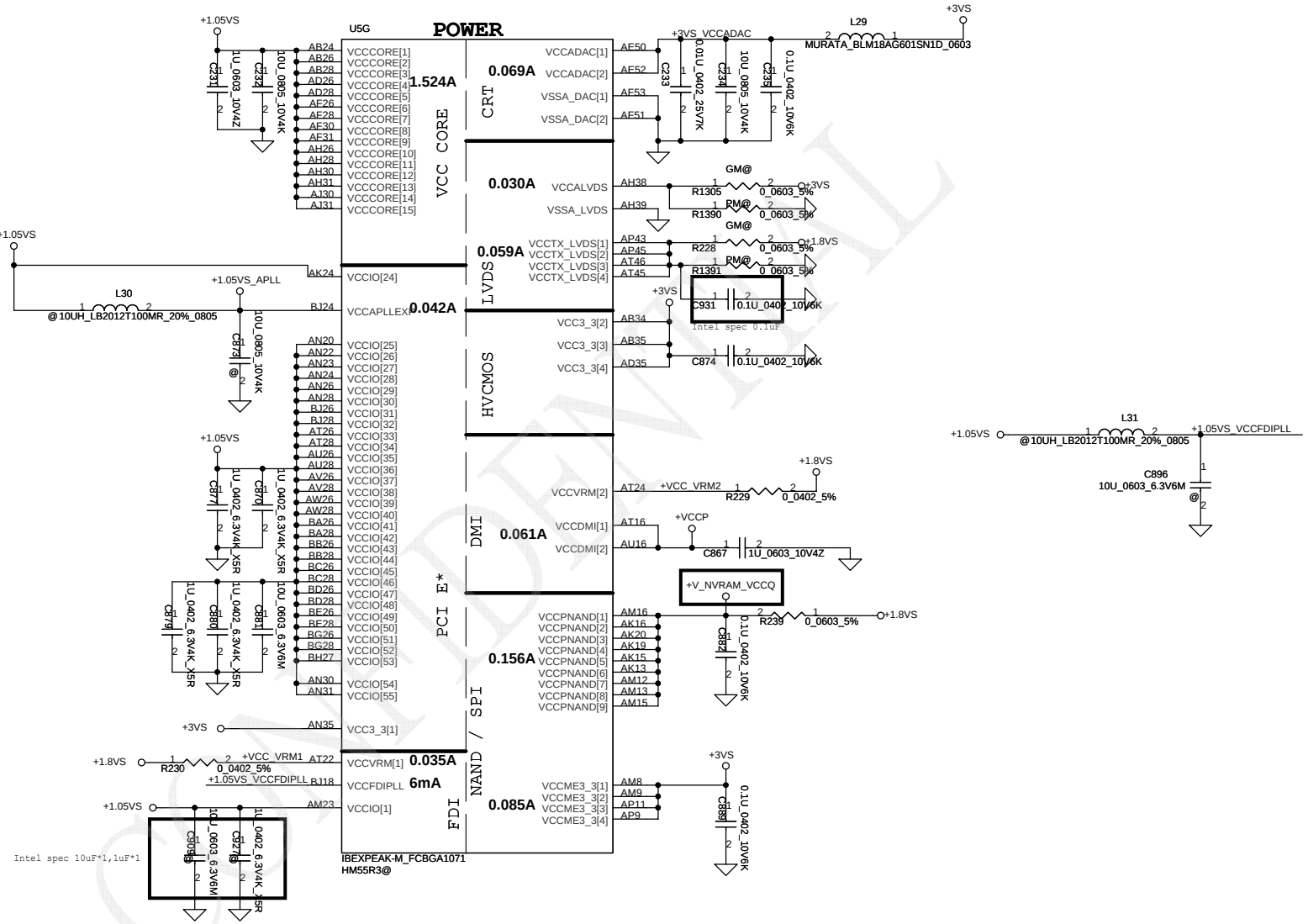

VccpNAND	1.8 V supply for Dual Channel NAND interface. This power is supplied by core well. If unused, this pin can be left as no connect.

Security Classification	Compal Secret Data		
Issued Date	2009/11/26	Deciphered Date	2010/11/26

THIS SHEET OF ENGINEERING DRAWING IS THE PROPRIETARY PROPERTY OF COMPAL ELECTRONICS, INC. AND CONTAINS CONFIDENTIAL AND TRADE SECRET INFORMATION. THIS SHEET MAY NOT BE TRANSFERED FROM THE CUSTODY OF THE COMPETENT DIVISION OF R&D DEPARTMENT EXCEPT AS AUTHORIZED BY COMPAL ELECTRONICS, INC. NEITHER THIS SHEET NOR THE INFORMATION IT CONTAINS MAY BE USED BY OR DISCLOSED TO ANY THIRD PARTY WITHOUT PRIOR WRITTEN CONSENT OF COMPAL ELECTRONICS, INC.

Compal Electronics, Inc.

Title: SCHEMATIC,MB A5361

Size: Custom | Document Number: 401715 | Rev: B

Date: Monday, January 11, 2010 | Sheet 23 of 52

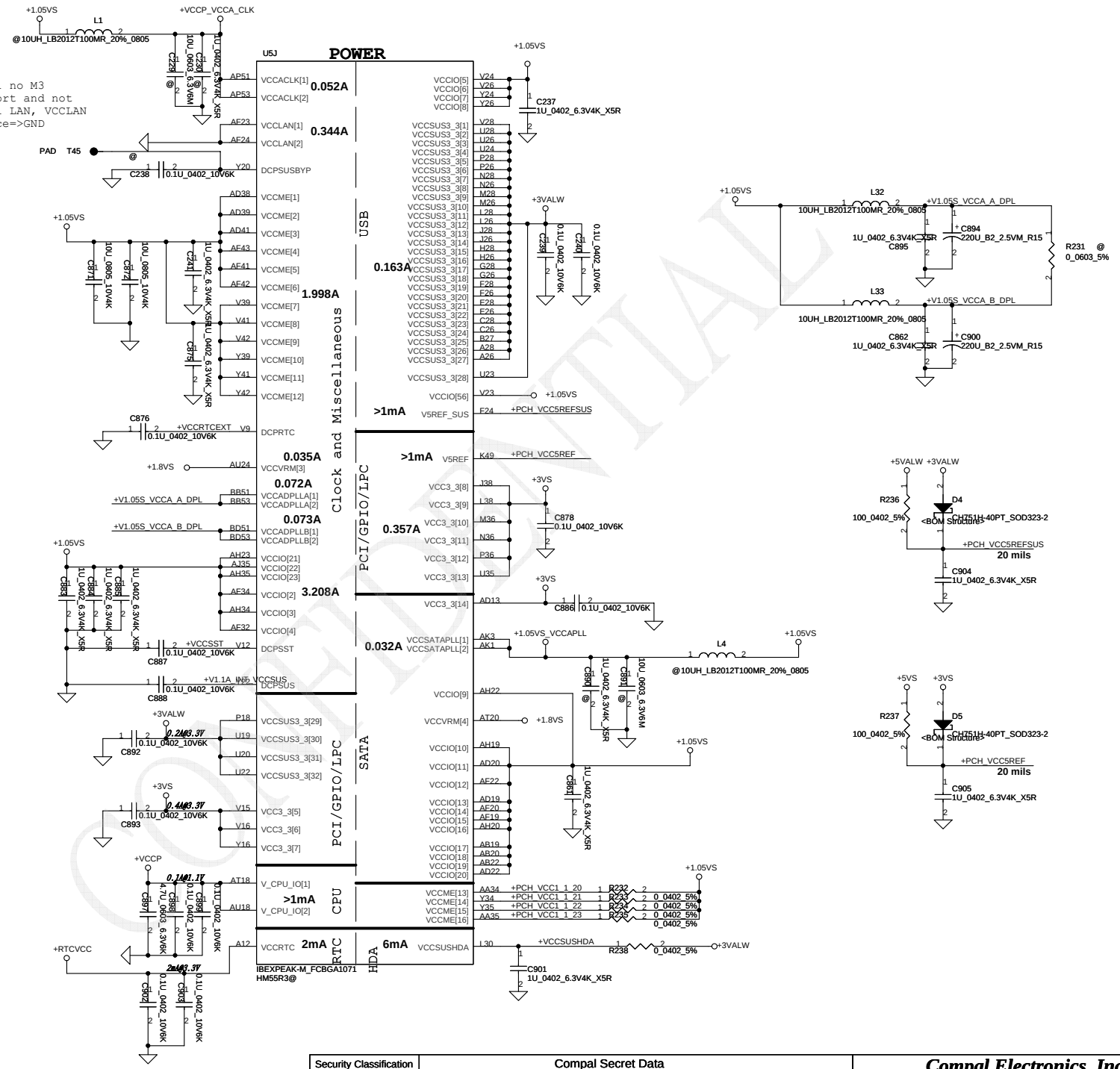

CONFIDENTIAL

Security Classification	Compal Secret Data		
Issued Date	2009/11/26	Deciphered Date	2010/11/26

THIS SHEET OF ENGINEERING DRAWING IS THE PROPRIETARY PROPERTY OF COMPAL ELECTRONICS, INC. AND CONTAINS CONFIDENTIAL AND TRADE SECRET INFORMATION. THIS SHEET MAY NOT BE TRANSFERED FROM THE CUSTODY OF THE COMPETENT DIVISION OF R&D DEPARTMENT EXCEPT AS AUTHORIZED BY COMPAL ELECTRONICS, INC. NEITHER THIS SHEET NOR THE INFORMATION IT CONTAINS MAY BE USED BY OR DISCLOSED TO ANY THIRD PARTY WITHOUT PRIOR WRITTEN CONSENT OF COMPAL ELECTRONICS, INC.

Compal Electronics, Inc.

Title: SCHEMATIC,MB A5361

Size: Custom | Document Number: 401715 | Rev: B

Date: Monday, January 11, 2010 | Sheet 24 of 52

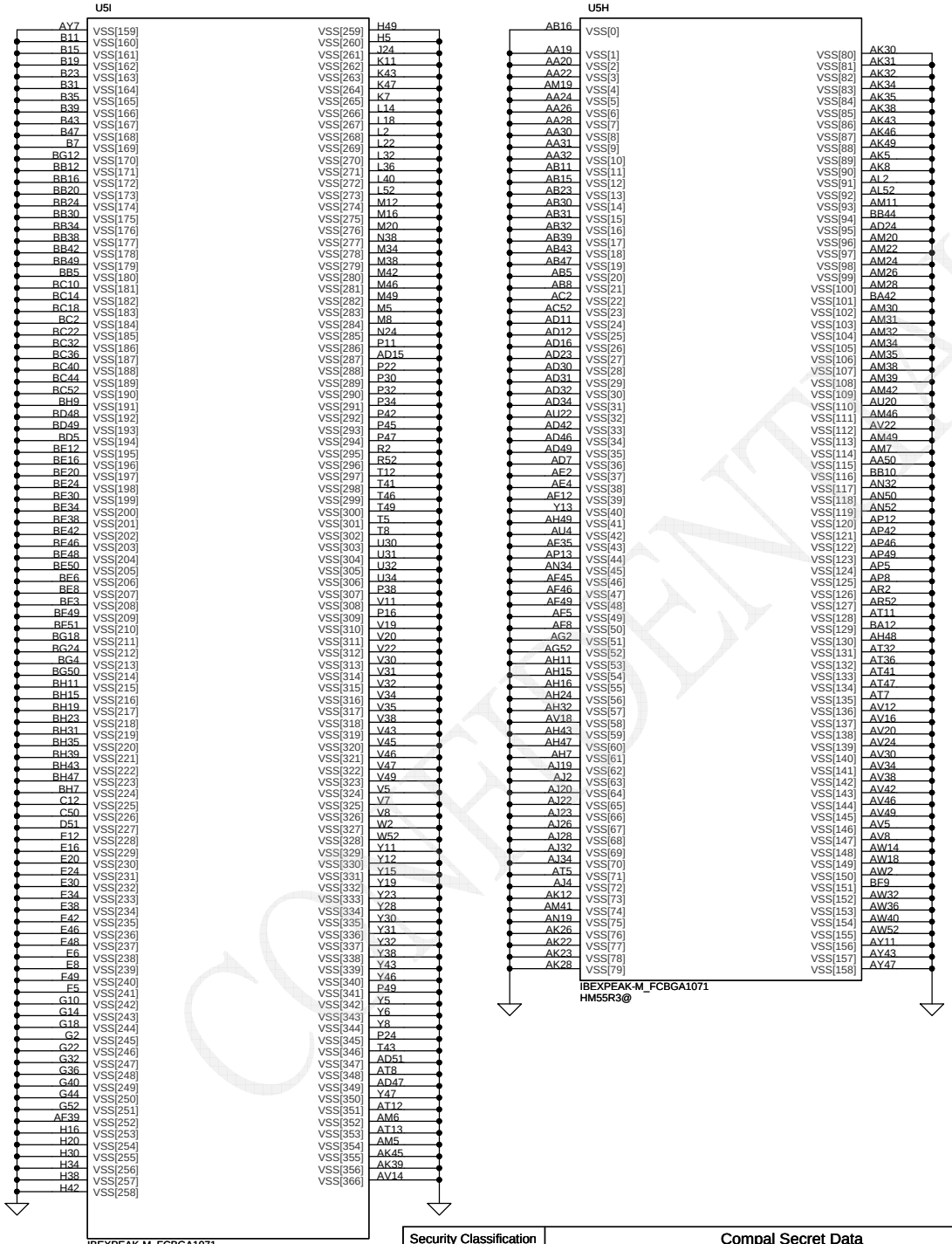

CONFIDENTIAL

Security Classification	Compal Secret Data		
Issued Date	2009/11/26	Deciphered Date	2010/11/26

THIS SHEET OF ENGINEERING DRAWING IS THE PROPRIETARY PROPERTY OF COMPAL ELECTRONICS, INC. AND CONTAINS CONFIDENTIAL AND TRADE SECRET INFORMATION. THIS SHEET MAY NOT BE TRANSFERED FROM THE CUSTODY OF THE COMPETENT DIVISION OF R&D DEPARTMENT EXCEPT AS AUTHORIZED BY COMPAL ELECTRONICS, INC. NEITHER THIS SHEET NOR THE INFORMATION IT CONTAINS MAY BE USED BY OR DISCLOSED TO ANY THIRD PARTY WITHOUT PRIOR WRITTEN CONSENT OF COMPAL ELECTRONICS, INC.

Compal Electronics, Inc.

Title: SCHEMATIC,MB A5361

Size: Custom | Document Number: 401715 | Rev: B

Date: Monday, January 11, 2010 | Sheet 25 of 52

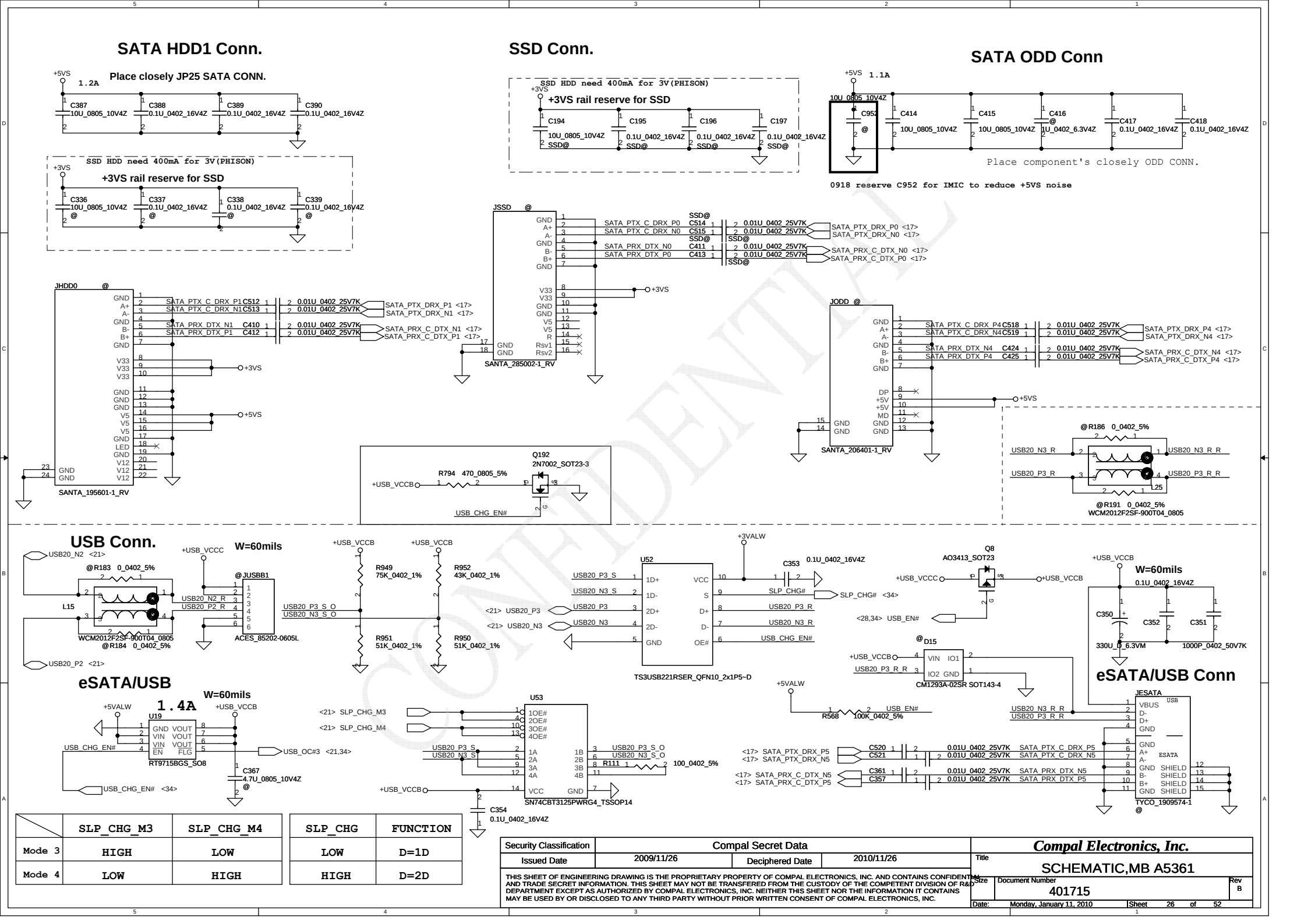

	SLP_CHG_M3	SLP_CHG_M4
Mode 3	HIGH	LOW
Mode 4	LOW	HIGH

SLP_CHG	FUNCTION
LOW	D=1D
HIGH	D=2D

Security Classification	Compal Secret Data		
Issued Date	2009/11/26	Deciphered Date	2010/11/26

THIS SHEET OF ENGINEERING DRAWING IS THE PROPRIETARY PROPERTY OF COMPAL ELECTRONICS, INC. AND CONTAINS CONFIDENTIAL AND TRADE SECRET INFORMATION. THIS SHEET MAY NOT BE TRANSFERED FROM THE CUSTODY OF THE COMPETENT DIVISION OF R&D DEPARTMENT EXCEPT AS AUTHORIZED BY COMPAL ELECTRONICS, INC. NEITHER THIS SHEET NOR THE INFORMATION IT CONTAINS MAY BE USED BY OR DISCLOSED TO ANY THIRD PARTY WITHOUT PRIOR WRITTEN CONSENT OF COMPAL ELECTRONICS, INC.

Compal Electronics, Inc.

Title: SCHEMATIC,MB A5361

Size | Document Number: 401715 | Rev: B

Date: Monday, January 11, 2010 | Sheet 26 of 52

B-CAS Circuit

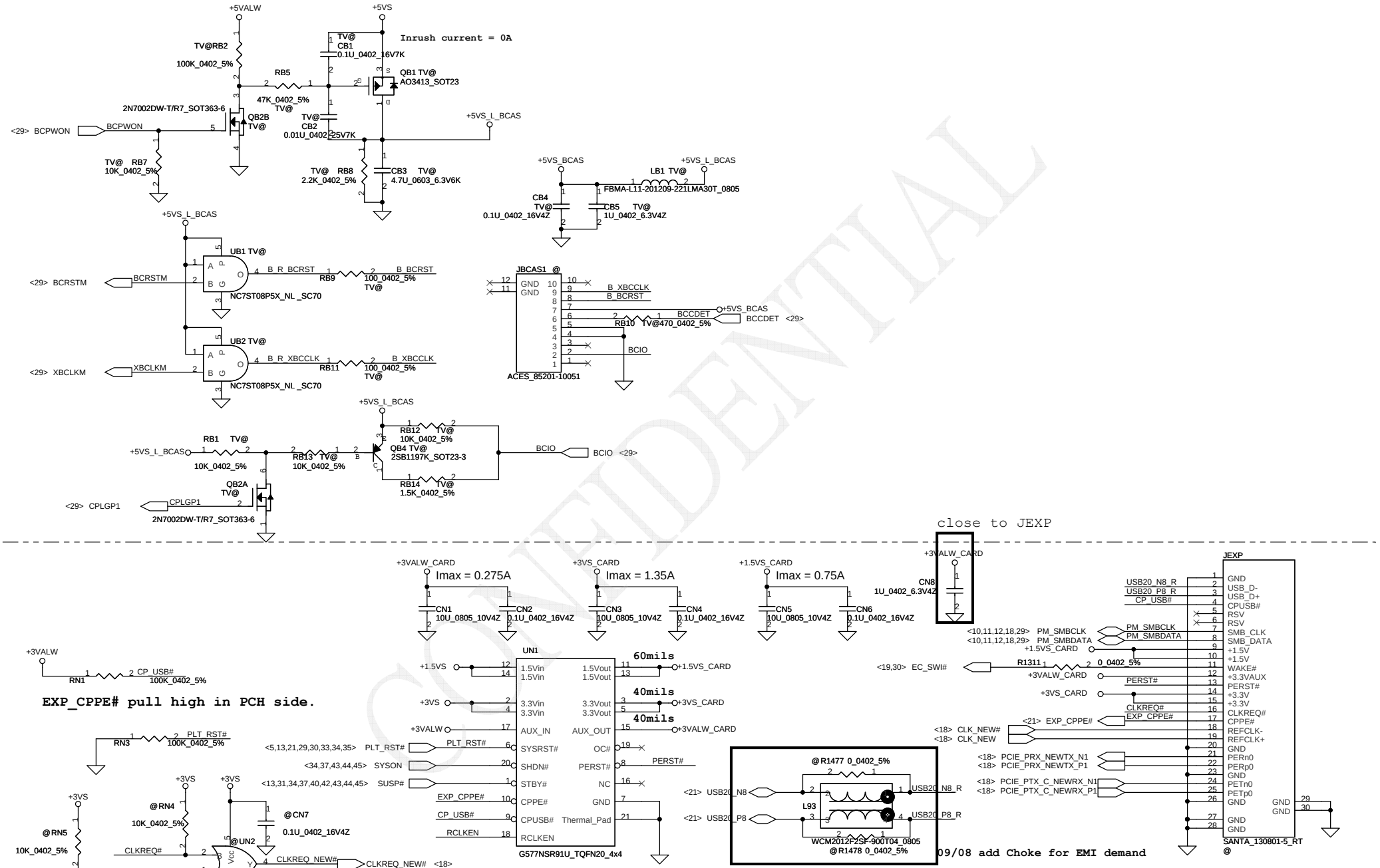

CONFIDENTIAL

Security Classification	Compal Secret Data		
Issued Date	2009/11/26	Deciphered Date	2010/11/26

THIS SHEET OF ENGINEERING DRAWING IS THE PROPRIETARY PROPERTY OF COMPAL ELECTRONICS, INC. AND CONTAINS CONFIDENTIAL AND TRADE SECRET INFORMATION. THIS SHEET MAY NOT BE TRANSFERED FROM THE CUSTODY OF THE COMPETENT DIVISION OF R&D DEPARTMENT EXCEPT AS AUTHORIZED BY COMPAL ELECTRONICS, INC. NEITHER THIS SHEET NOR THE INFORMATION IT CONTAINS MAY BE USED BY OR DISCLOSED TO ANY THIRD PARTY WITHOUT PRIOR WRITTEN CONSENT OF COMPAL ELECTRONICS, INC.

Compal Electronics, Inc.

Title: SCHEMATIC,MB A5361

Size | Document Number: 401715 | Rev: B

Date: Monday, January 11, 2010 | Sheet 27 of 52

BlueTooth Interface

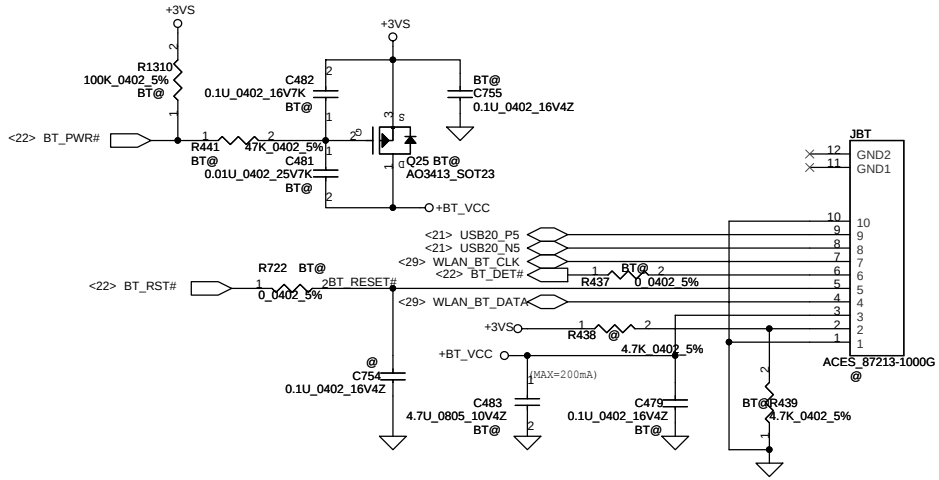

Finger printer

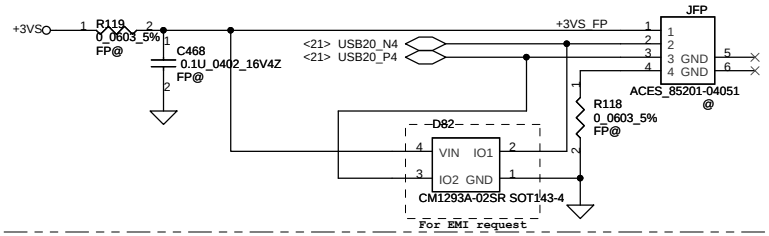

MDC 1.5 Conn.

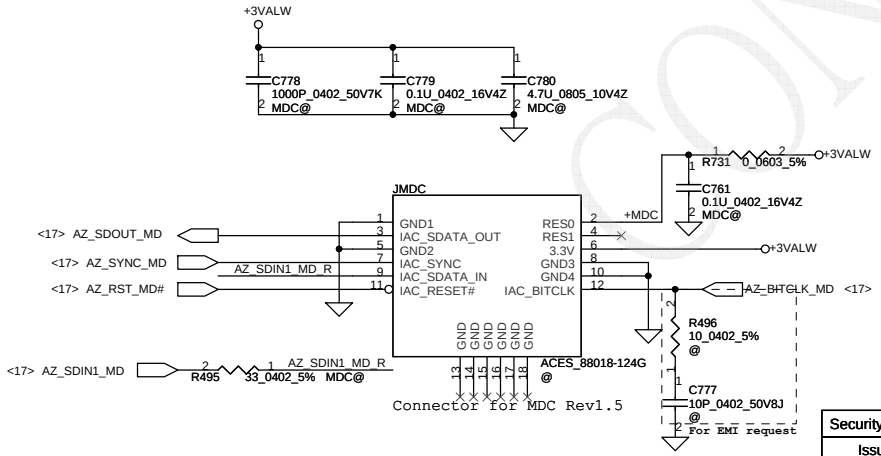

Right USB Board

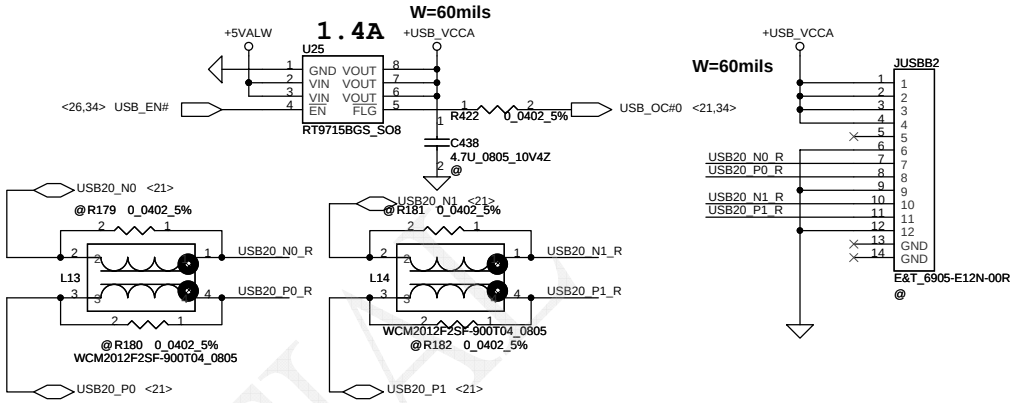

FM Tuner

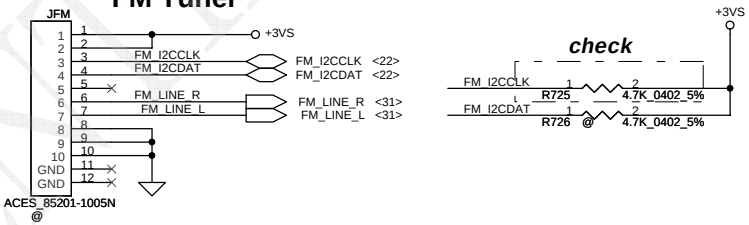

Felica

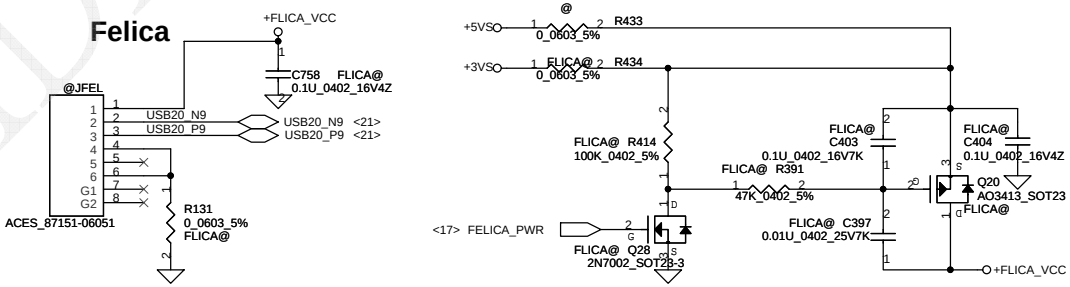

Int. Camera

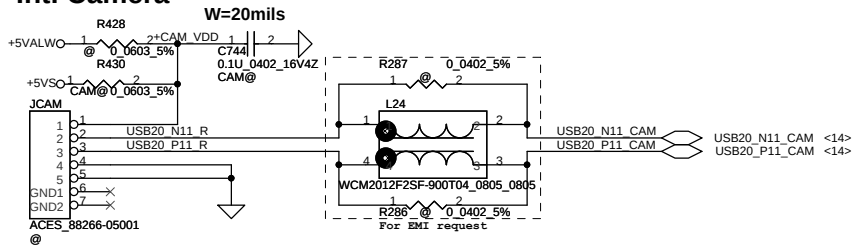

Security Classification	Compal Secret Data		
Issued Date	2009/11/26	Deciphered Date	2010/11/26

THIS SHEET OF ENGINEERING DRAWING IS THE PROPRIETARY PROPERTY OF COMPAL ELECTRONICS, INC. AND CONTAINS CONFIDENTIAL AND TRADE SECRET INFORMATION. THIS SHEET MAY NOT BE TRANSFERED FROM THE CUSTODY OF THE COMPETENT DIVISION OF R&D DEPARTMENT EXCEPT AS AUTHORIZED BY COMPAL ELECTRONICS, INC. NEITHER THIS SHEET NOR THE INFORMATION IT CONTAINS MAY BE USED BY OR DISCLOSED TO ANY THIRD PARTY WITHOUT PRIOR WRITTEN CONSENT OF COMPAL ELECTRONICS, INC.

Compal Electronics, Inc.

Title: SCHEMATIC,MB A5361

Size | Document Number: 401715 | Rev: B

Date: Monday, January 11, 2010 | Sheet 28 of 52

CONFIDENTIAL

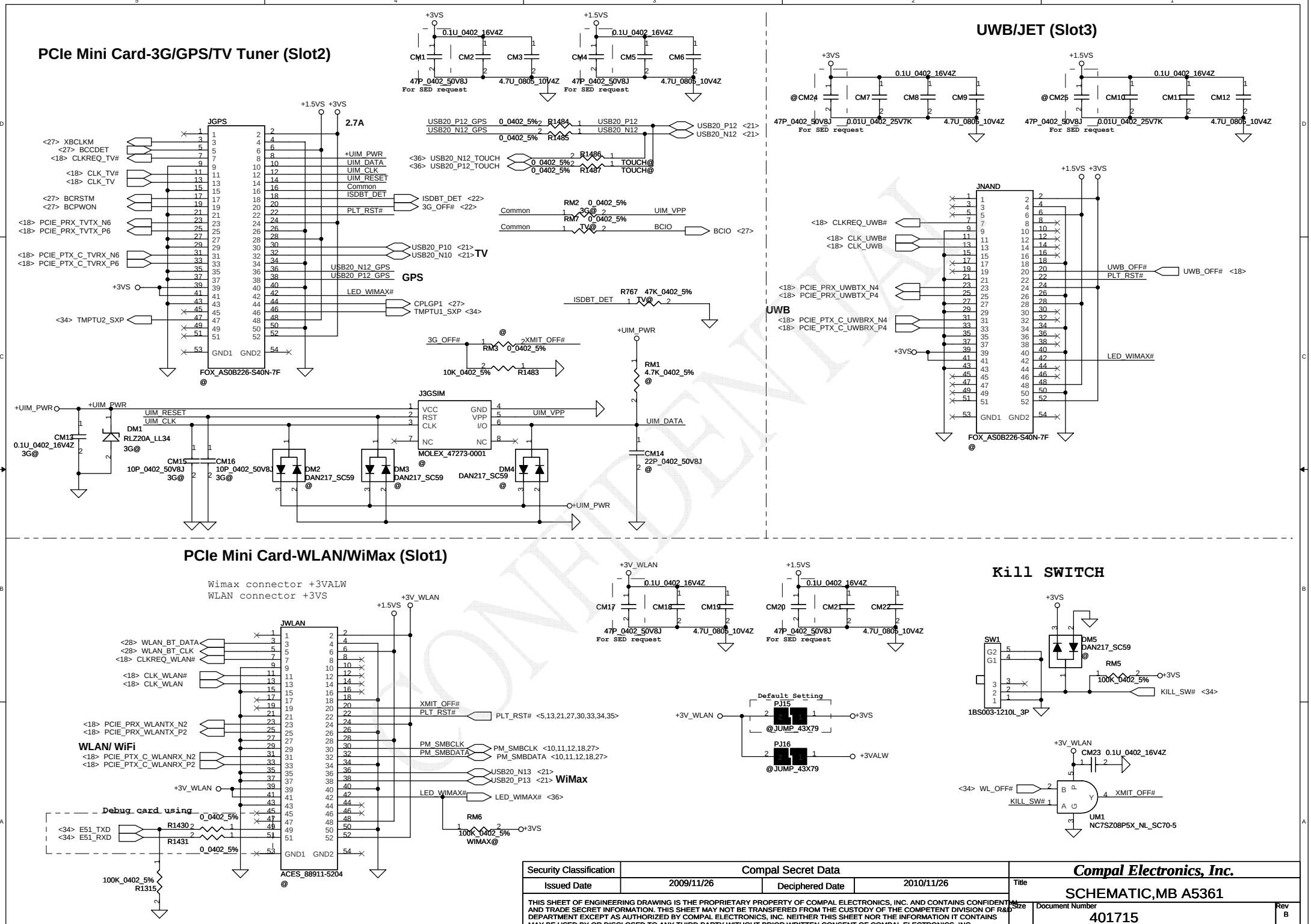

Security Classification	Compal Secret Data		
Issued Date	2009/11/26	Deciphered Date	2010/11/26

THIS SHEET OF ENGINEERING DRAWING IS THE PROPRIETARY PROPERTY OF COMPAL ELECTRONICS, INC. AND CONTAINS CONFIDENTIAL AND TRADE SECRET INFORMATION. THIS SHEET MAY NOT BE TRANSFERED FROM THE CUSTODY OF THE COMPETENT DIVISION OF R&D DEPARTMENT EXCEPT AS AUTHORIZED BY COMPAL ELECTRONICS, INC. NEITHER THIS SHEET NOR THE INFORMATION IT CONTAINS MAY BE USED BY OR DISCLOSED TO ANY THIRD PARTY WITHOUT PRIOR WRITTEN CONSENT OF COMPAL ELECTRONICS, INC.

Compal Electronics, Inc.

Title: SCHEMATIC,MB A5361

Size | Document Number: 401715 | Rev: B

Date: Monday, January 11, 2010 | Sheet 29 of 52

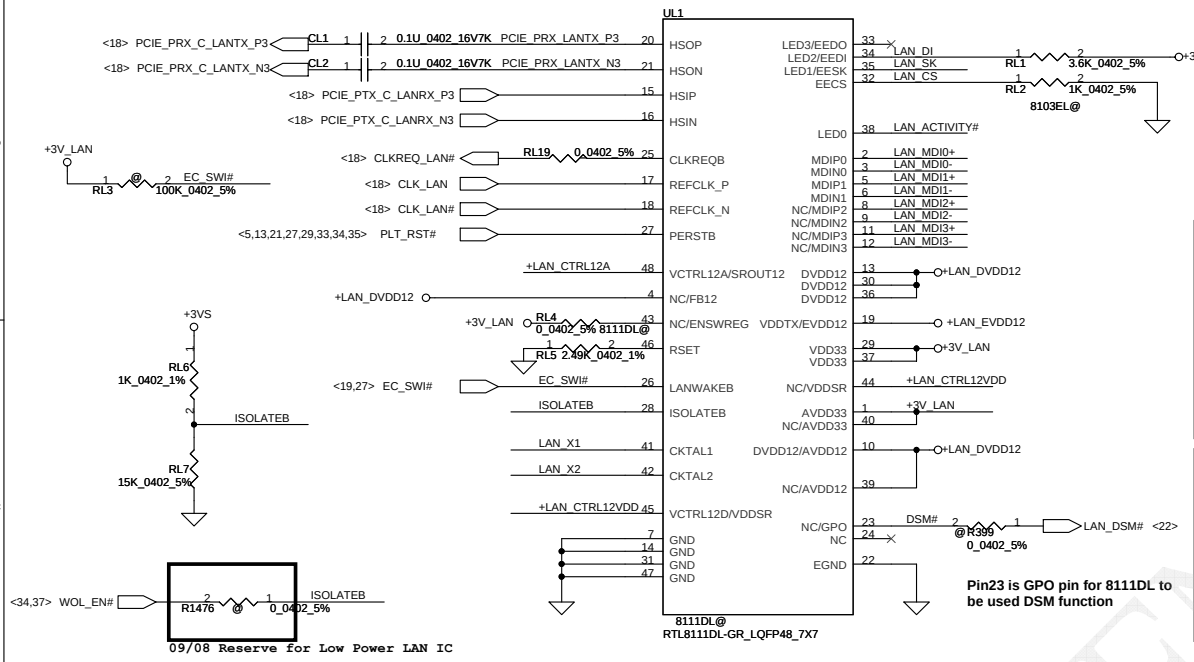

Pin23 is GPO pin for 8111DL to be used DSM function

09/08 Reserve for Low Power LAN IC

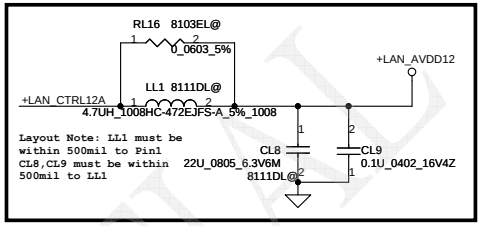

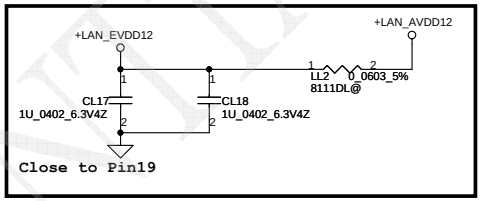

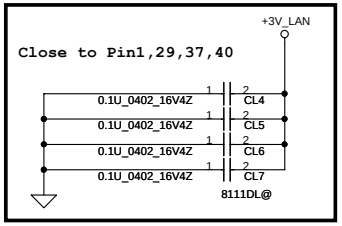

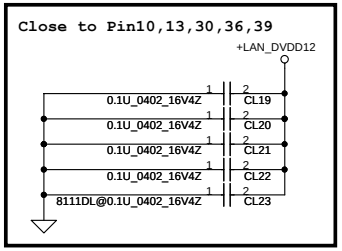

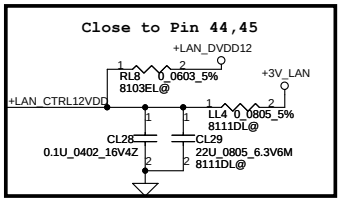

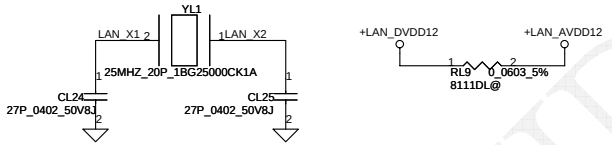

pin assignments table for difference

Pin	8111DL	8103EL
4	FB12	NC
8	MDIP2	NC
9	MDIN2	NC
10	AVDD12	DVDD12
11	MDIP3	NC
12	MDIN3	NC
19	EVDD12	VDDTX
23	GPO	NC
33	EEDO	LED3
34	EEDI	LED2
35	EESK	LED1
39	AVDD12	NC
40	AVDD33	NC
43	ENSR	NC
44	VDDSR	NC
45	VDDSR	VCTRL12D
48	SROUT12	VCTRL12A

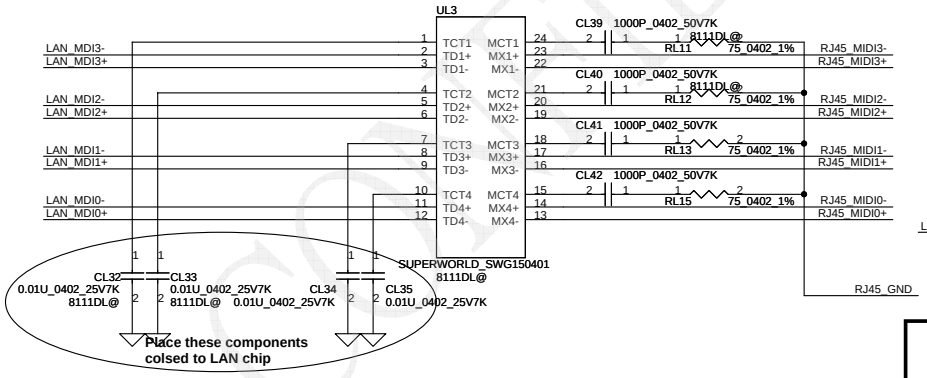

Place these components colsed to LAN chip

LAN Conn.

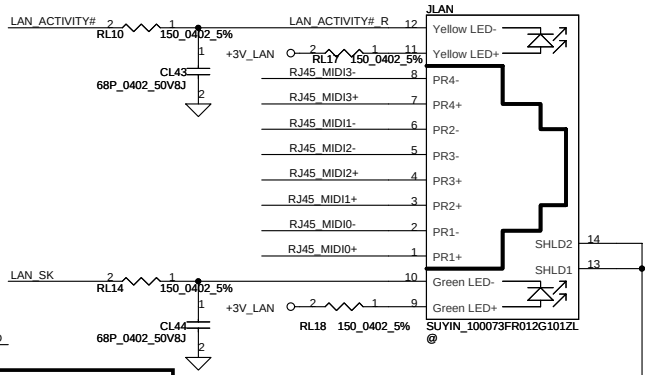

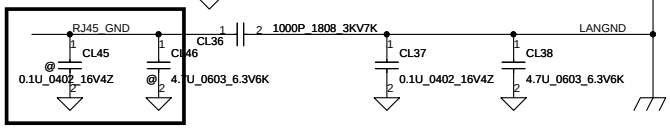

0917 Reserve CL45, CL46 for EMI ISN LAN test

CONFIDENTIAL

Security Classification	Compal Secret Data		
Issued Date	2009/11/26	Deciphered Date	2010/11/26

THIS SHEET OF ENGINEERING DRAWING IS THE PROPRIETARY PROPERTY OF COMPAL ELECTRONICS, INC. AND CONTAINS CONFIDENTIAL AND TRADE SECRET INFORMATION. THIS SHEET MAY NOT BE TRANSFERED FROM THE CUSTODY OF THE COMPETENT DIVISION OF R&D DEPARTMENT EXCEPT AS AUTHORIZED BY COMPAL ELECTRONICS, INC. NEITHER THIS SHEET NOR THE INFORMATION IT CONTAINS MAY BE USED BY OR DISCLOSED TO ANY THIRD PARTY WITHOUT PRIOR WRITTEN CONSENT OF COMPAL ELECTRONICS, INC.

Compal Electronics, Inc.

Title: SCHEMATIC,MB A5361

Size | Document Number: 401715 | Rev: B

Date: Monday, January 11, 2010 | Sheet 30 of 52

Codec

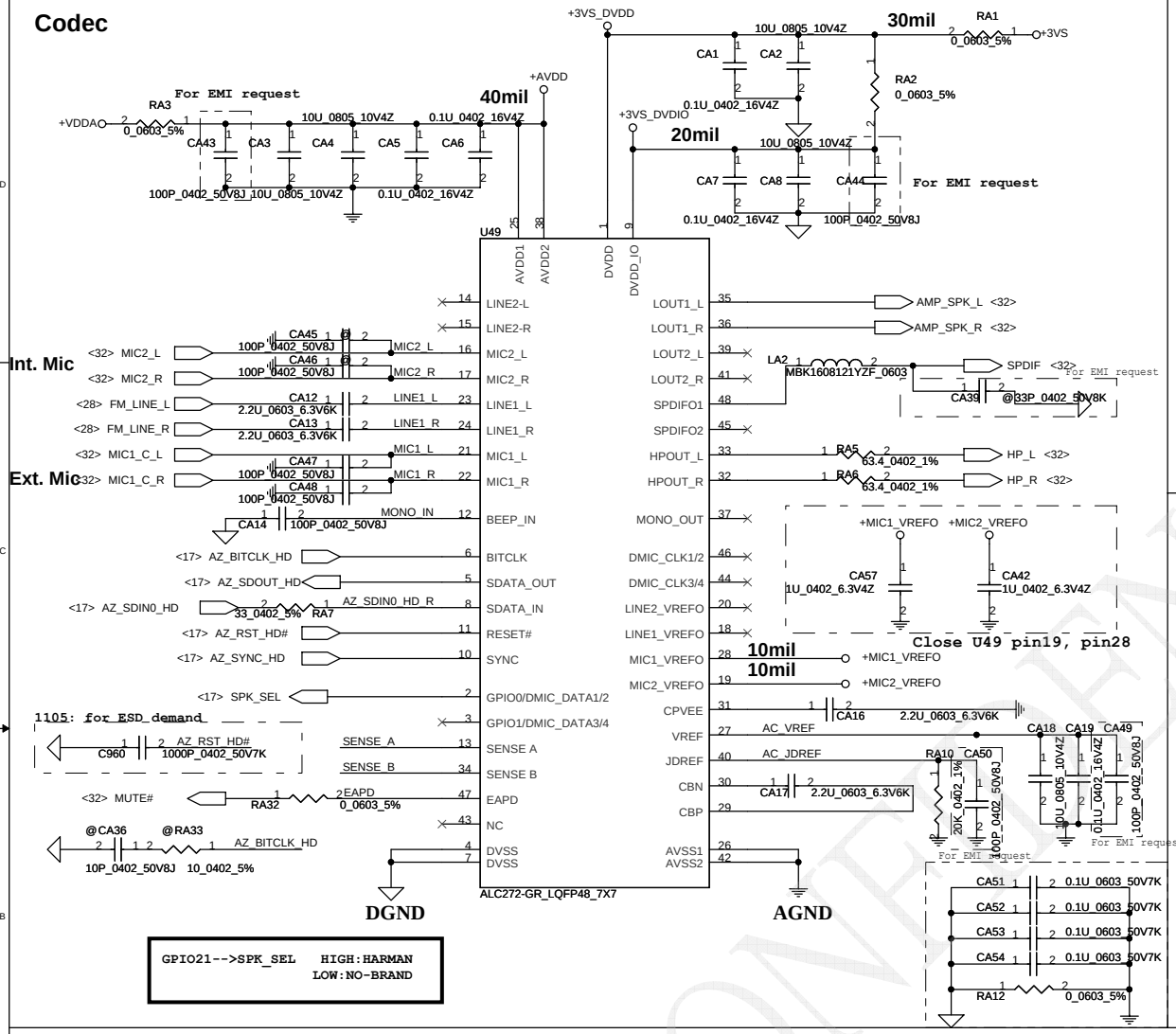

GPIO21-->SPK_SEL HIGH:HARMAN
LOW:NO-BRAND

Audio regulator

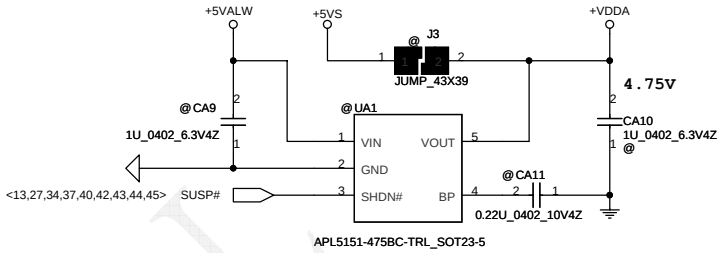

Beep sound

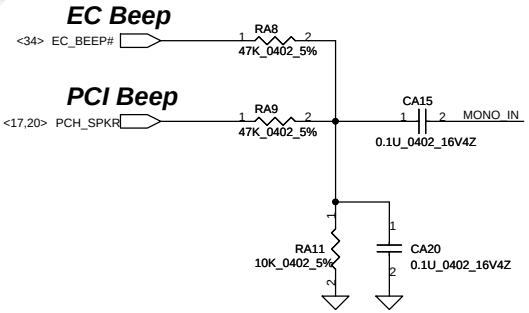

Sense Pin	Impedance	Codec Signals	Function
SENSE A	39.2K	PORT-A (PIN 39, 41)	
	20K	PORT-B (PIN 21, 22)	Ext. MIC
	10K	PORT-C (PIN 23, 24)	FM tuner
	5.1K	PORT-D (PIN 35, 36)	SPK out
SENSE B	39.2K	PORT-E (PIN 14, 15)	
	20K	PORT-F (PIN 16, 17)	Int. MIC
	10K	PORT-H (PIN 37)	
	5.1K	PORT-I (PIN 32, 33)	Headphone out

place close to chip

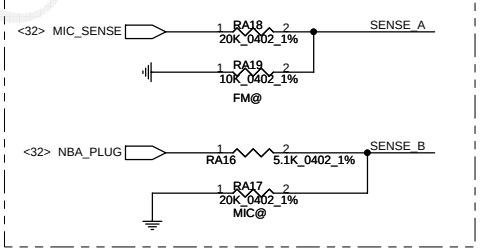

CONFIDENTIAL

Security Classification	Compal Secret Data		
Issued Date	2009/11/26	Deciphered Date	2010/11/26

THIS SHEET OF ENGINEERING DRAWING IS THE PROPRIETARY PROPERTY OF COMPAL ELECTRONICS, INC. AND CONTAINS CONFIDENTIAL AND TRADE SECRET INFORMATION. THIS SHEET MAY NOT BE TRANSFERED FROM THE CUSTODY OF THE COMPETENT DIVISION OF R&D DEPARTMENT EXCEPT AS AUTHORIZED BY COMPAL ELECTRONICS, INC. NEITHER THIS SHEET NOR THE INFORMATION IT CONTAINS MAY BE USED BY OR DISCLOSED TO ANY THIRD PARTY WITHOUT PRIOR WRITTEN CONSENT OF COMPAL ELECTRONICS, INC.

Compal Electronics, Inc.

Title: SCHEMATIC,MB A5361

Size | Document Number: 401715 | Rev: B

Date: Monday, January 11, 2010 | Sheet 31 of 52

TPA6017 Medium Range Amplifier

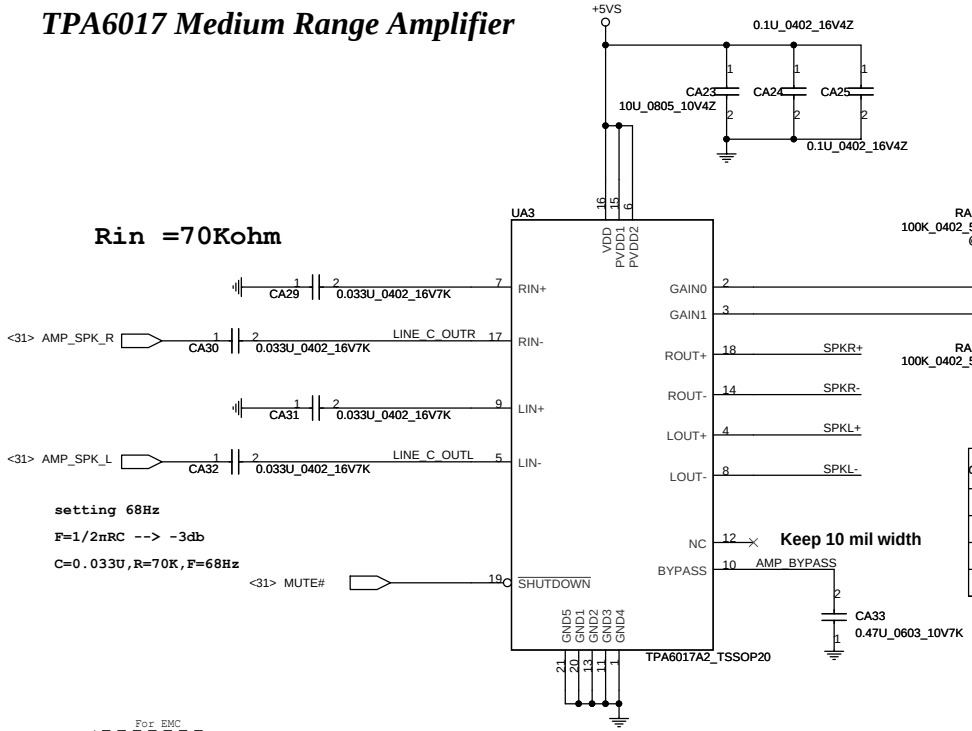

Rin =70Kohm

setting 68Hz

F=1/2πRC --> -3db

C=0.033U,R=70K,F=68Hz

GAIN0	GAIN1	Av(db)	Rin(ohm)
0	0	6	90K
0	1	10	70K
1	0	15.6	45K
1	1	21.6	25K

Ext. Mic

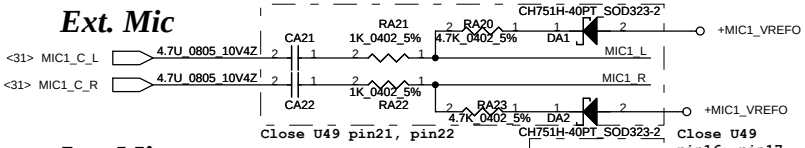

Int. Mic

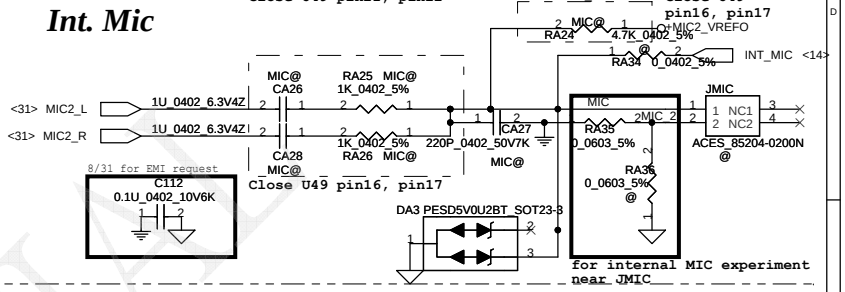

Left Connector

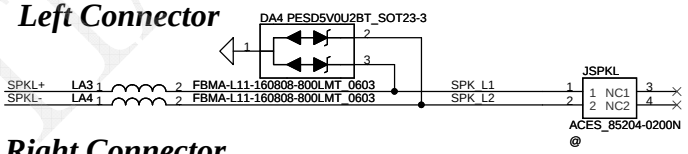

Right Connector

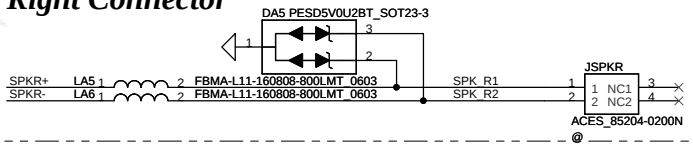

KEYBOARD CONN.

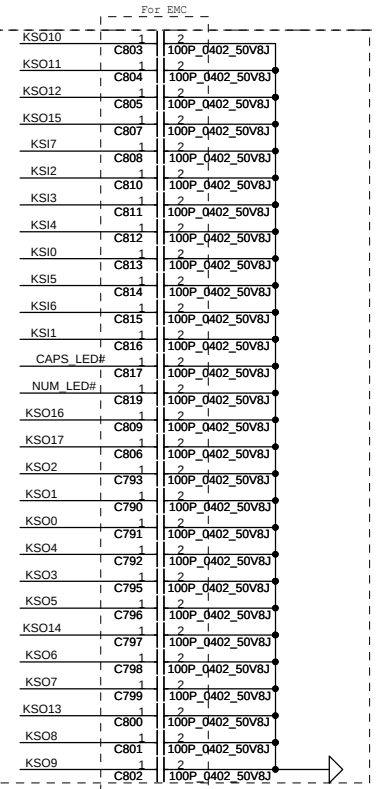

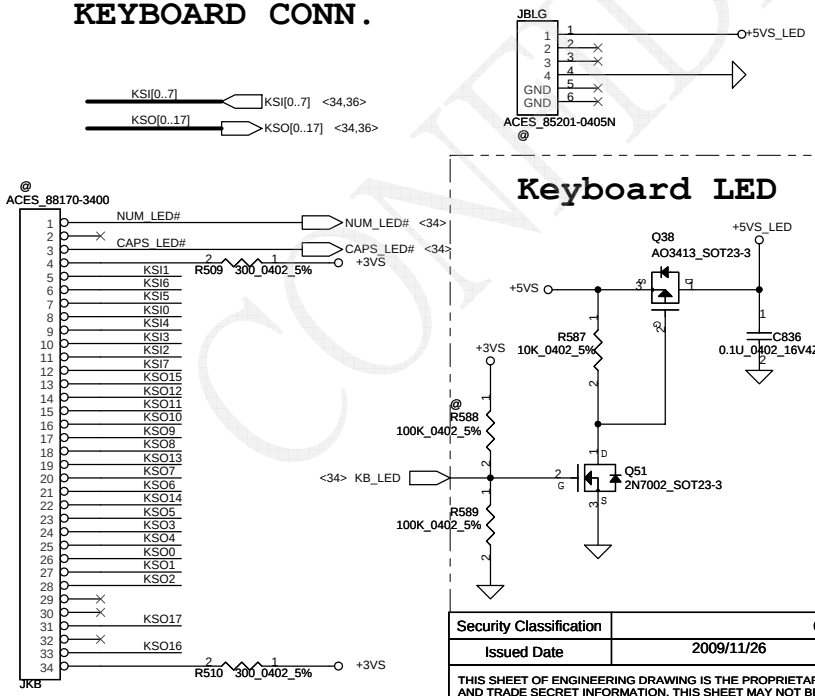

Keyboard LED

HeadPhone/LINE Out JACK

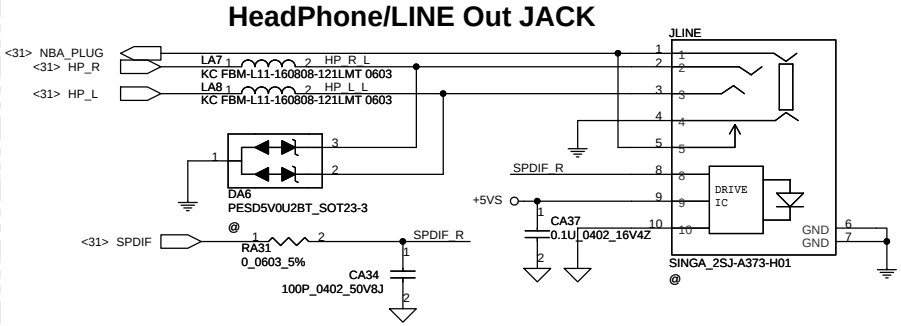

Ext.MIC/LINE IN JACK

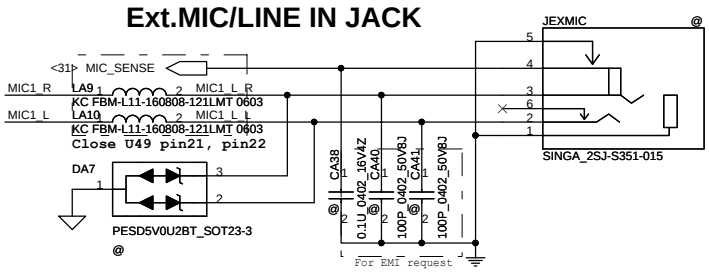

Security Classification	Compal Secret Data		
Issued Date	2009/11/26	Deciphered Date	2010/11/26

THIS SHEET OF ENGINEERING DRAWING IS THE PROPRIETARY PROPERTY OF COMPAL ELECTRONICS, INC. AND CONTAINS CONFIDENTIAL AND TRADE SECRET INFORMATION. THIS SHEET MAY NOT BE TRANSFERED FROM THE CUSTODY OF THE COMPETENT DIVISION OF R&D DEPARTMENT EXCEPT AS AUTHORIZED BY COMPAL ELECTRONICS, INC. NEITHER THIS SHEET NOR THE INFORMATION IT CONTAINS MAY BE USED BY OR DISCLOSED TO ANY THIRD PARTY WITHOUT PRIOR WRITTEN CONSENT OF COMPAL ELECTRONICS, INC.

Compal Electronics, Inc.

Title: SCHEMATIC,MB A5361

Size | Document Number: 401715 | Rev: B

Date: Monday, January 11, 2010 | Sheet 32 of 52

CONFIDENTIAL

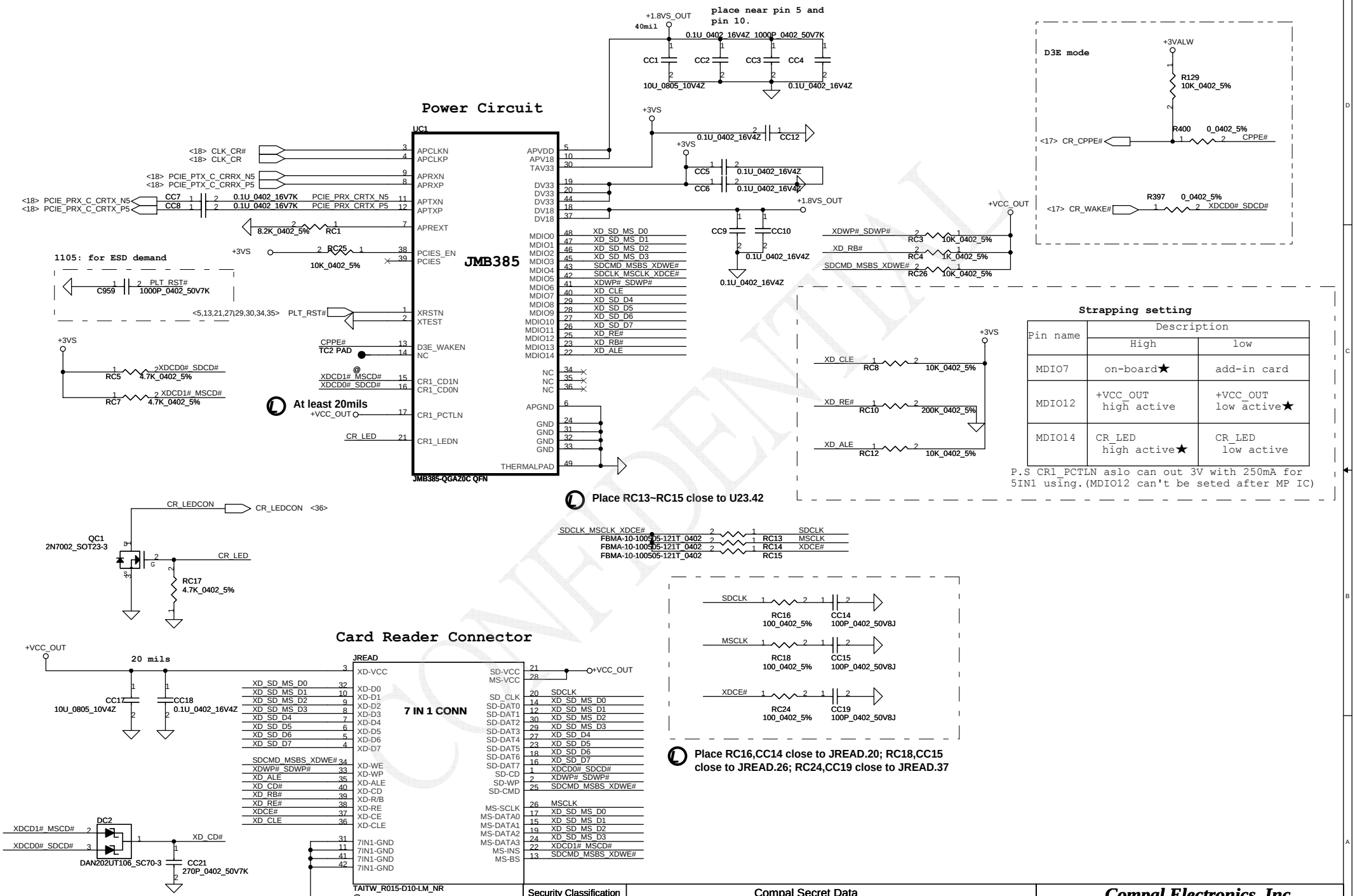

CONFIDENTIAL

Security Classification	Compal Secret Data		
Issued Date	2009/11/26	Deciphered Date	2010/11/26

THIS SHEET OF ENGINEERING DRAWING IS THE PROPRIETARY PROPERTY OF COMPAL ELECTRONICS, INC. AND CONTAINS CONFIDENTIAL AND TRADE SECRET INFORMATION. THIS SHEET MAY NOT BE TRANSFERED FROM THE CUSTODY OF THE COMPETENT DIVISION OF R&D DEPARTMENT EXCEPT AS AUTHORIZED BY COMPAL ELECTRONICS, INC. NEITHER THIS SHEET NOR THE INFORMATION IT CONTAINS MAY BE USED BY OR DISCLOSED TO ANY THIRD PARTY WITHOUT PRIOR WRITTEN CONSENT OF COMPAL ELECTRONICS, INC.

Compal Electronics, Inc.

Title: SCHEMATIC,MB A5361

Size | Document Number: 401715 | Rev: B

Date: Monday, January 11, 2010 | Sheet 33 of 52

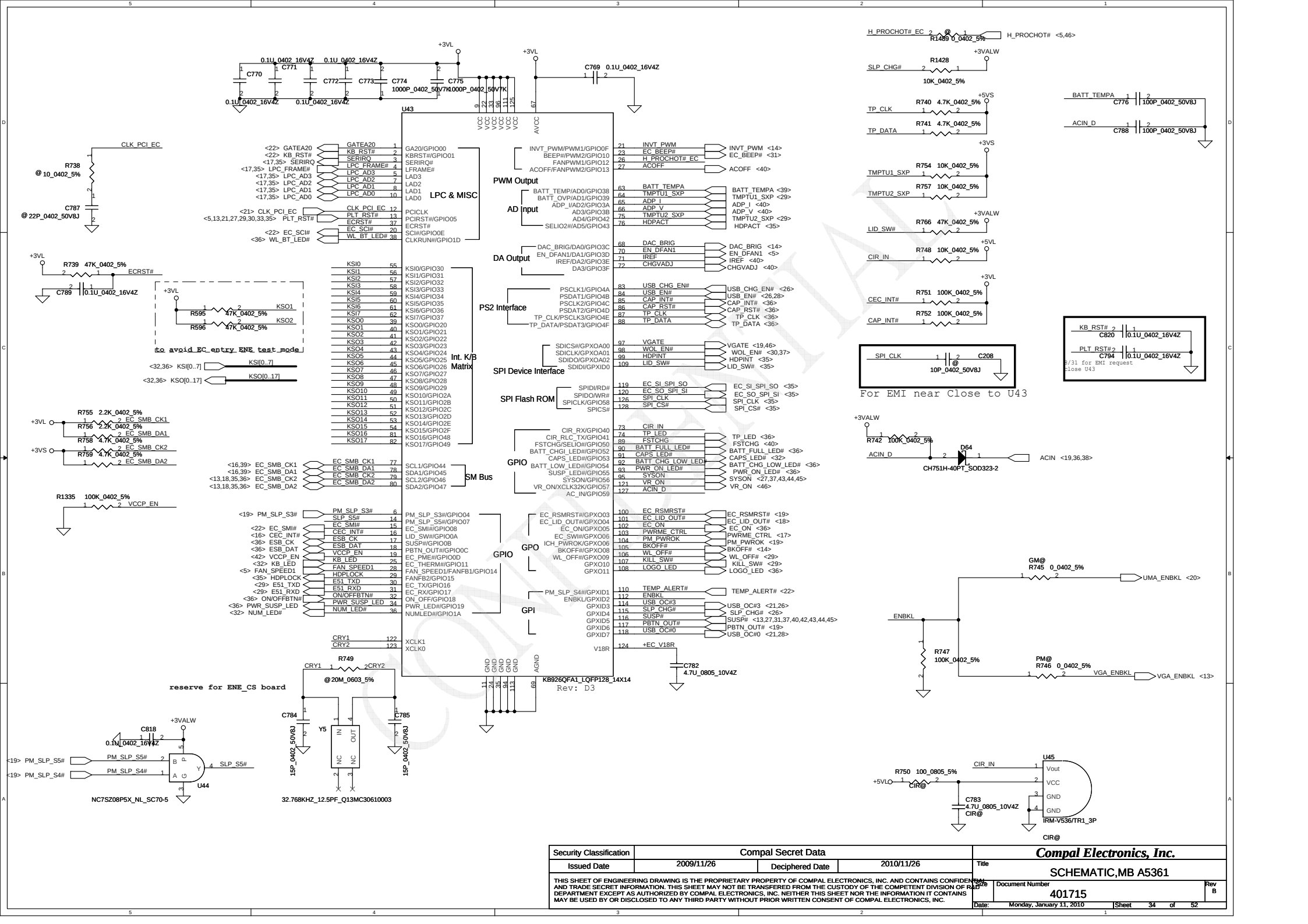

Security Classification	Compal Secret Data			Compal Electronics, Inc.
Issued Date	2009/11/26	Deciphered Date	2010/11/26	Title: SCHEMATIC,MB A5361
THIS SHEET OF ENGINEERING DRAWING IS THE PROPRIETARY PROPERTY OF COMPAL ELECTRONICS, INC. AND CONTAINS CONFIDENTIAL AND TRADE SECRET INFORMATION. THIS SHEET MAY NOT BE TRANSFERED FROM THE CUSTODY OF THE COMPETENT DIVISION OF R&D DEPARTMENT EXCEPT AS AUTHORIZED BY COMPAL ELECTRONICS, INC. NEITHER THIS SHEET NOR THE INFORMATION IT CONTAINS MAY BE USED BY OR DISCLOSED TO ANY THIRD PARTY WITHOUT PRIOR WRITTEN CONSENT OF COMPAL ELECTRONICS, INC.				Size: A3 / Document Number: 401715 / Rev: B
				Date: Monday, January 11, 2010 / Sheet 34 of 52

SPI Flash (1MByte*1)

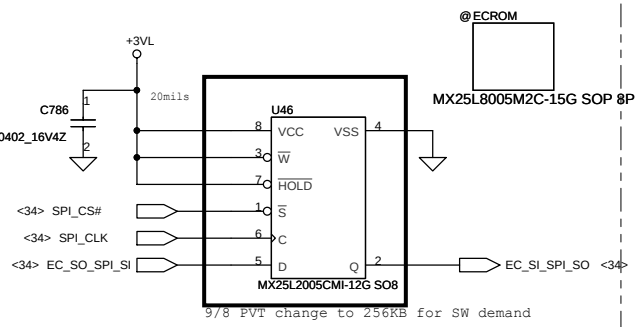

9/8 PVT change to 256KB for SW demand

P/N :SA00003GK00 & SA00003GM10

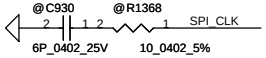

Lid SW

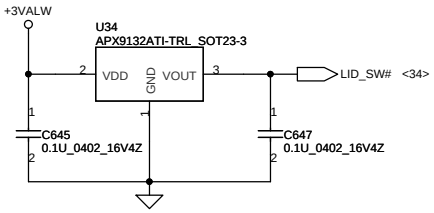

LPC Debug Port

Please place the PAD under DDR DIMM.

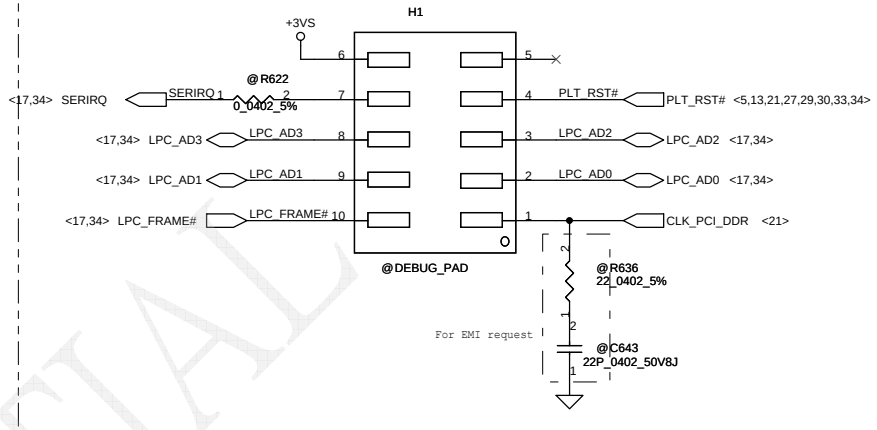

G-Sensor

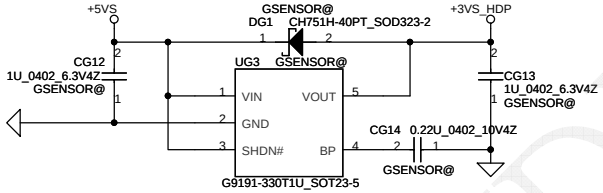

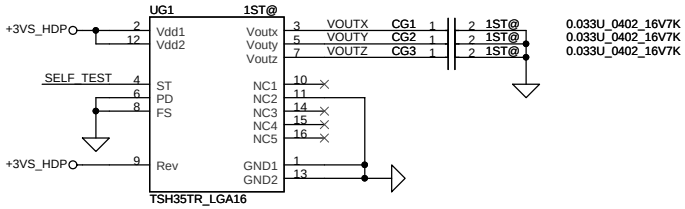

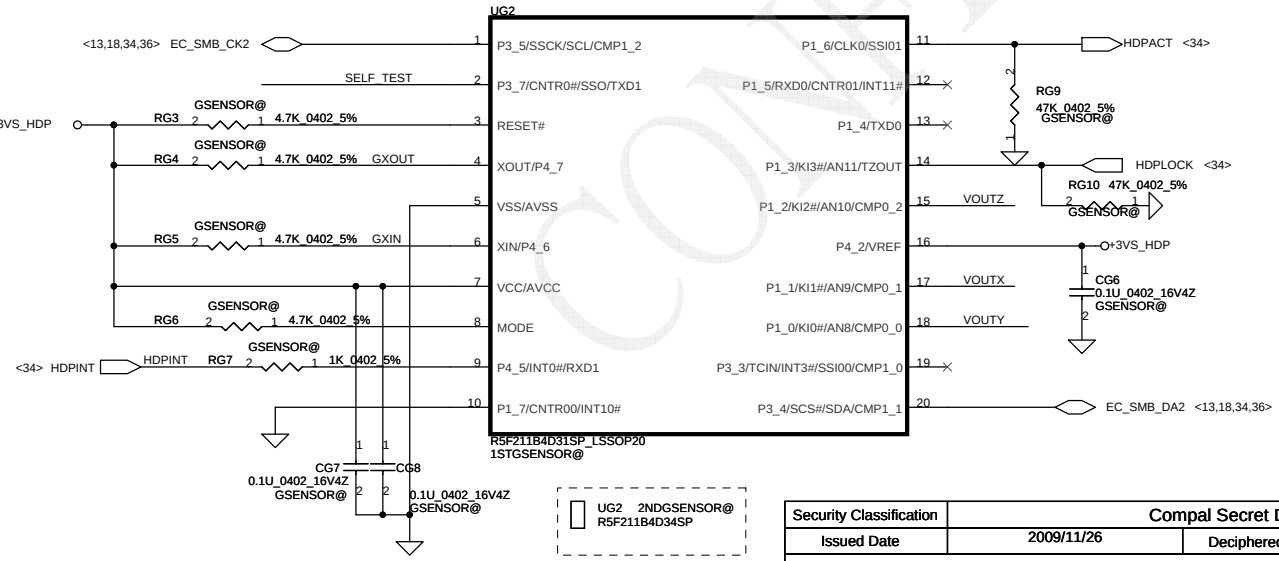

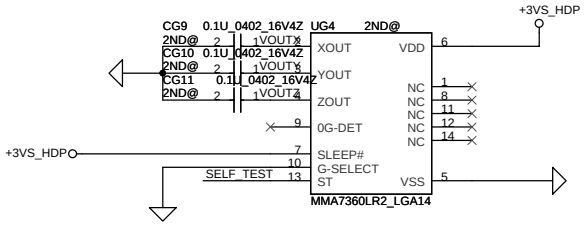

UG2 2NDGSENSOR@
R5F211B4D34SP

Security Classification	Compal Secret Data		
Issued Date	2009/11/26	Deciphered Date	2010/11/26

THIS SHEET OF ENGINEERING DRAWING IS THE PROPRIETARY PROPERTY OF COMPAL ELECTRONICS, INC. AND CONTAINS CONFIDENTIAL AND TRADE SECRET INFORMATION. THIS SHEET MAY NOT BE TRANSFERED FROM THE CUSTODY OF THE COMPETENT DIVISION OF R&D DEPARTMENT EXCEPT AS AUTHORIZED BY COMPAL ELECTRONICS, INC. NEITHER THIS SHEET NOR THE INFORMATION IT CONTAINS MAY BE USED BY OR DISCLOSED TO ANY THIRD PARTY WITHOUT PRIOR WRITTEN CONSENT OF COMPAL ELECTRONICS, INC.

Compal Electronics, Inc.

Title: SCHEMATIC,MB A5361

Size | Document Number: 401715 | Rev: B

Date: Monday, January 11, 2010 | Sheet 35 of 52

CONFIDENTIAL

Power Button/ PWR/B

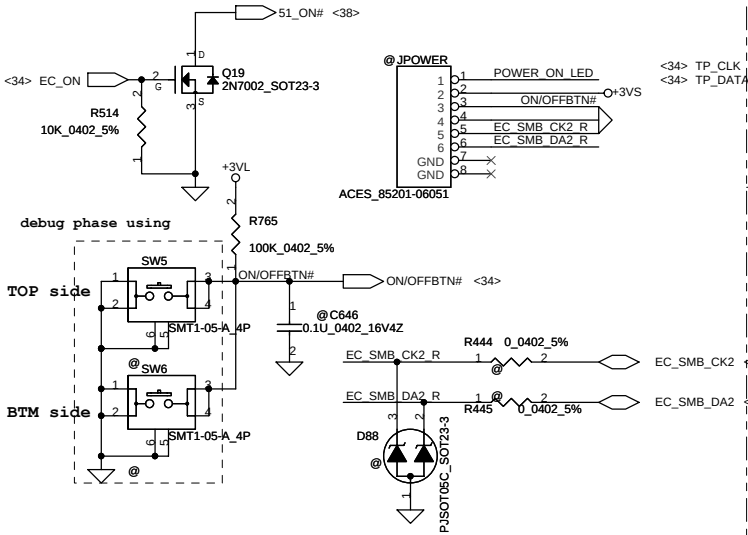

Touch/B Connector

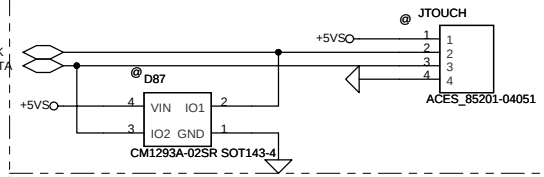

Caps Sensor Connector

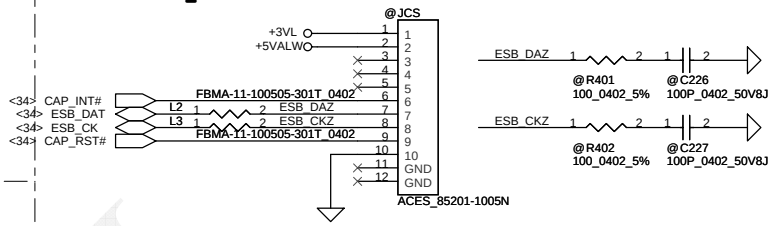

Light Pipe Connector

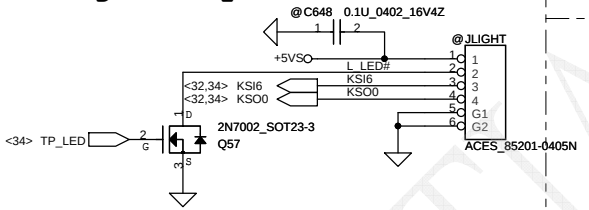

LED/B Connector

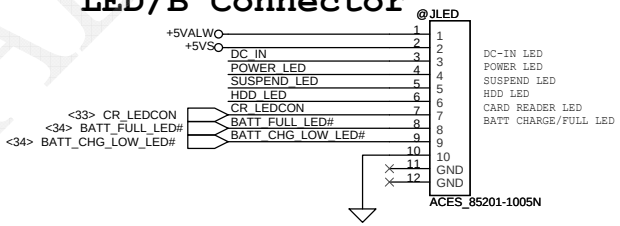

DC-IN LED

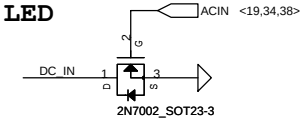

Logo LED

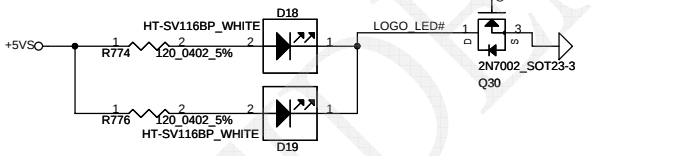

WL&BT LED

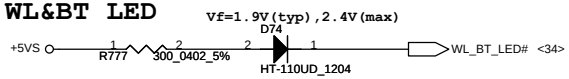

WiMAX LED

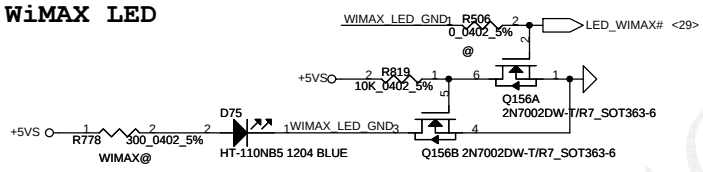

POWER LED

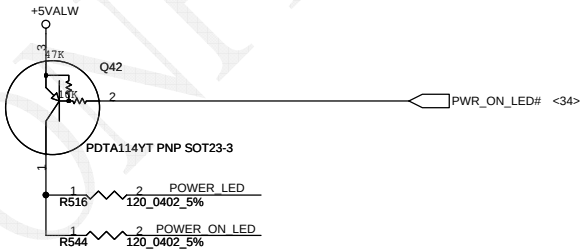

HDD LED

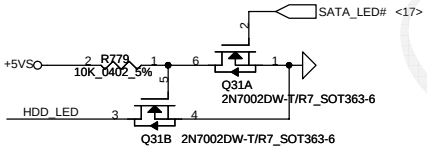

SUSPEND LED

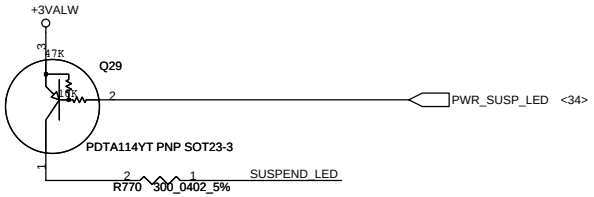

Screw Hole

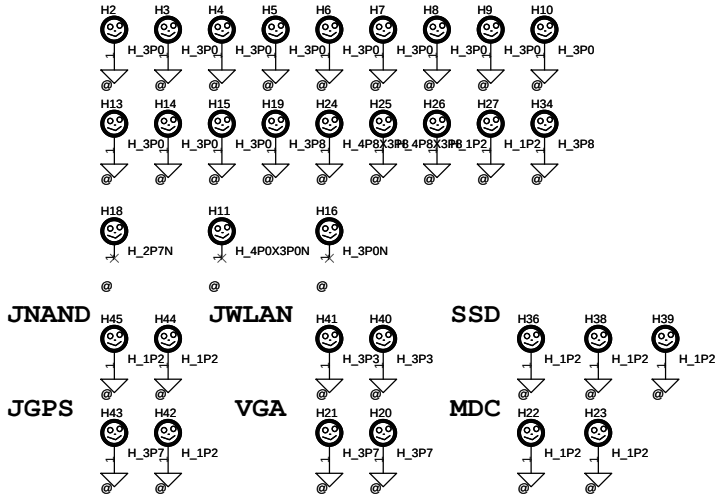

Touch Screen

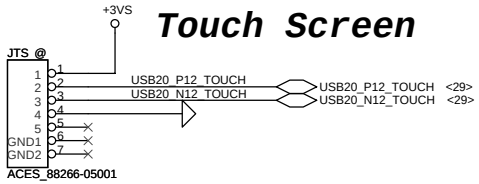

PCB Fedical Mark PAD

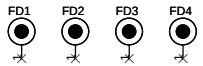

CONFIDENTIAL

Security Classification	Compal Secret Data		
Issued Date	2009/11/26	Deciphered Date	2010/11/26

THIS SHEET OF ENGINEERING DRAWING IS THE PROPRIETARY PROPERTY OF COMPAL ELECTRONICS, INC. AND CONTAINS CONFIDENTIAL AND TRADE SECRET INFORMATION. THIS SHEET MAY NOT BE TRANSFERED FROM THE CUSTODY OF THE COMPETENT DIVISION OF R&D DEPARTMENT EXCEPT AS AUTHORIZED BY COMPAL ELECTRONICS, INC. NEITHER THIS SHEET NOR THE INFORMATION IT CONTAINS MAY BE USED BY OR DISCLOSED TO ANY THIRD PARTY WITHOUT PRIOR WRITTEN CONSENT OF COMPAL ELECTRONICS, INC.

Compal Electronics, Inc.

Title: SCHEMATIC,MB A5361

Size | Document Number: 401715 | Rev: B

Date: Monday, January 11, 2010 | Sheet 36 of 52

+3VALW TO +3VS

Vgs=-0V,Id=9A,Rds=18.5mohm

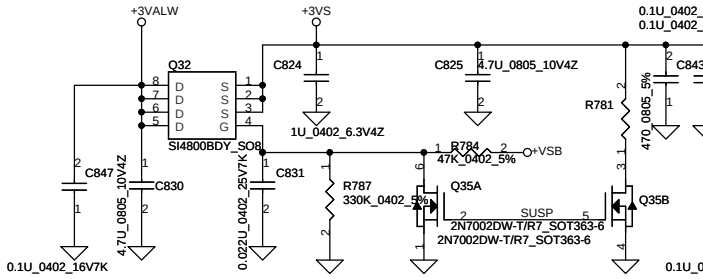

+5VALW TO +5VS

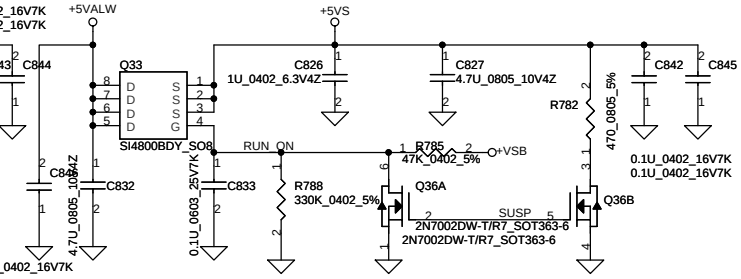

+1.5V to +1.5VS

Vgs=10V,Id=14.5A,Rds=6mohm

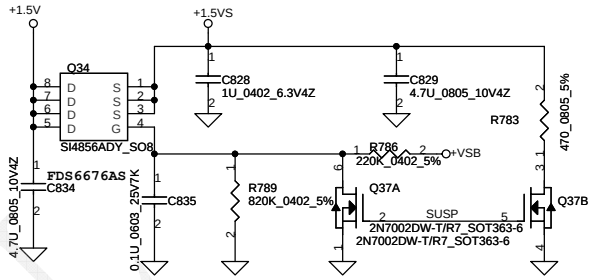

+3VALW TO +3V_LAN

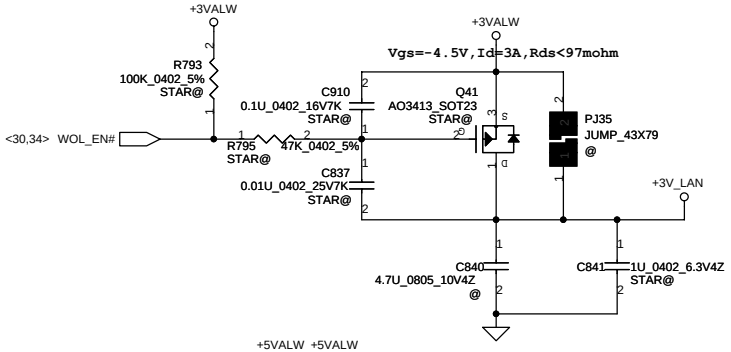

+3VS TO +3VS_MXM

Vgs=-4.5V,Id=3A,Rds<97mohm

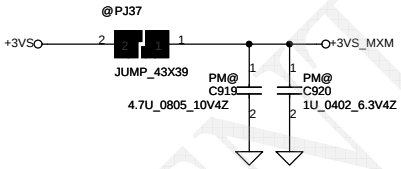

+1.8V to +1.8VS_MXM

Vgs=10V,Id=14.5A,Rds=6mohm

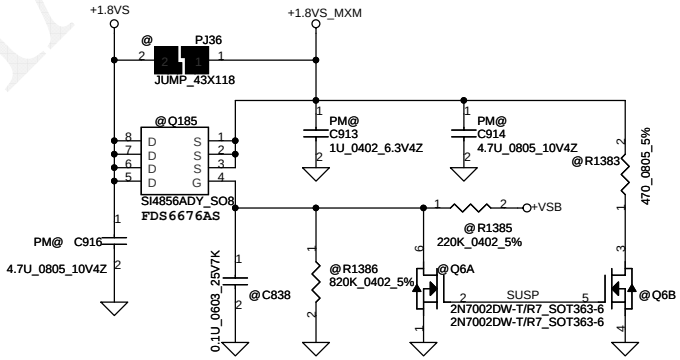

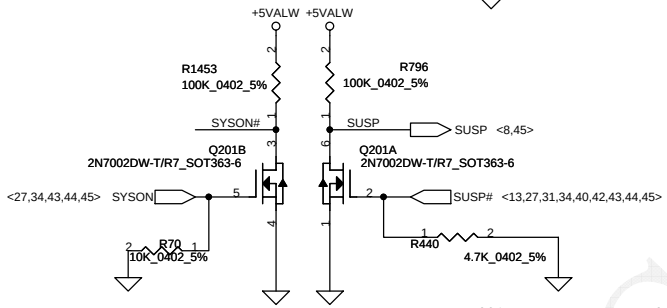

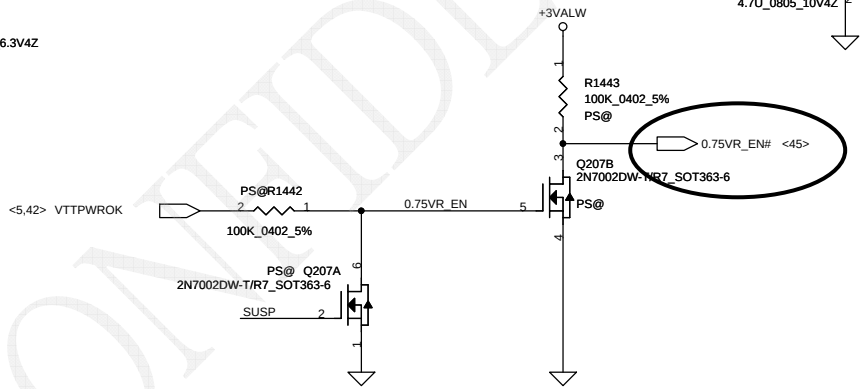

0917 :change from 470 to 47ohm to meet INTEL S3 reduce sequence

09/08 for ESD demand

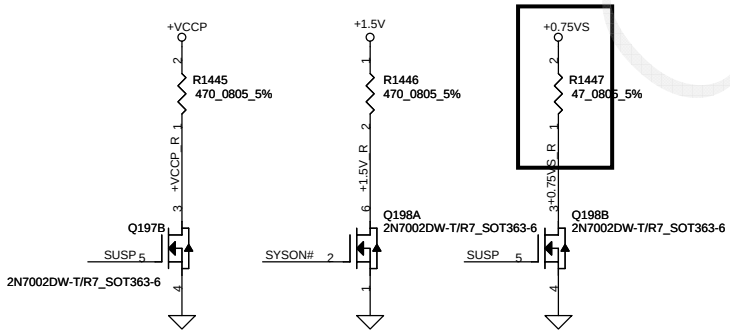

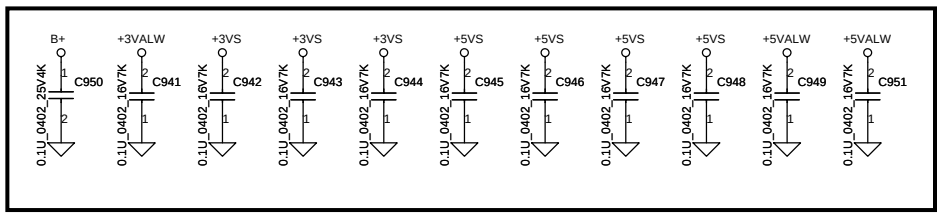

Security Classification	Compal Secret Data		
Issued Date	2009/11/26	Deciphered Date	2010/11/26

THIS SHEET OF ENGINEERING DRAWING IS THE PROPRIETARY PROPERTY OF COMPAL ELECTRONICS, INC. AND CONTAINS CONFIDENTIAL AND TRADE SECRET INFORMATION. THIS SHEET MAY NOT BE TRANSFERED FROM THE CUSTODY OF THE COMPETENT DIVISION OF R&D DEPARTMENT EXCEPT AS AUTHORIZED BY COMPAL ELECTRONICS, INC. NEITHER THIS SHEET NOR THE INFORMATION IT CONTAINS MAY BE USED BY OR DISCLOSED TO ANY THIRD PARTY WITHOUT PRIOR WRITTEN CONSENT OF COMPAL ELECTRONICS, INC.

Compal Electronics, Inc.

Title: SCHEMATIC,MB A5361

Size | Document Number: 401715 | Rev: B

Date: Monday, January 11, 2010 | Sheet 37 of 52

CONFIDENTIAL

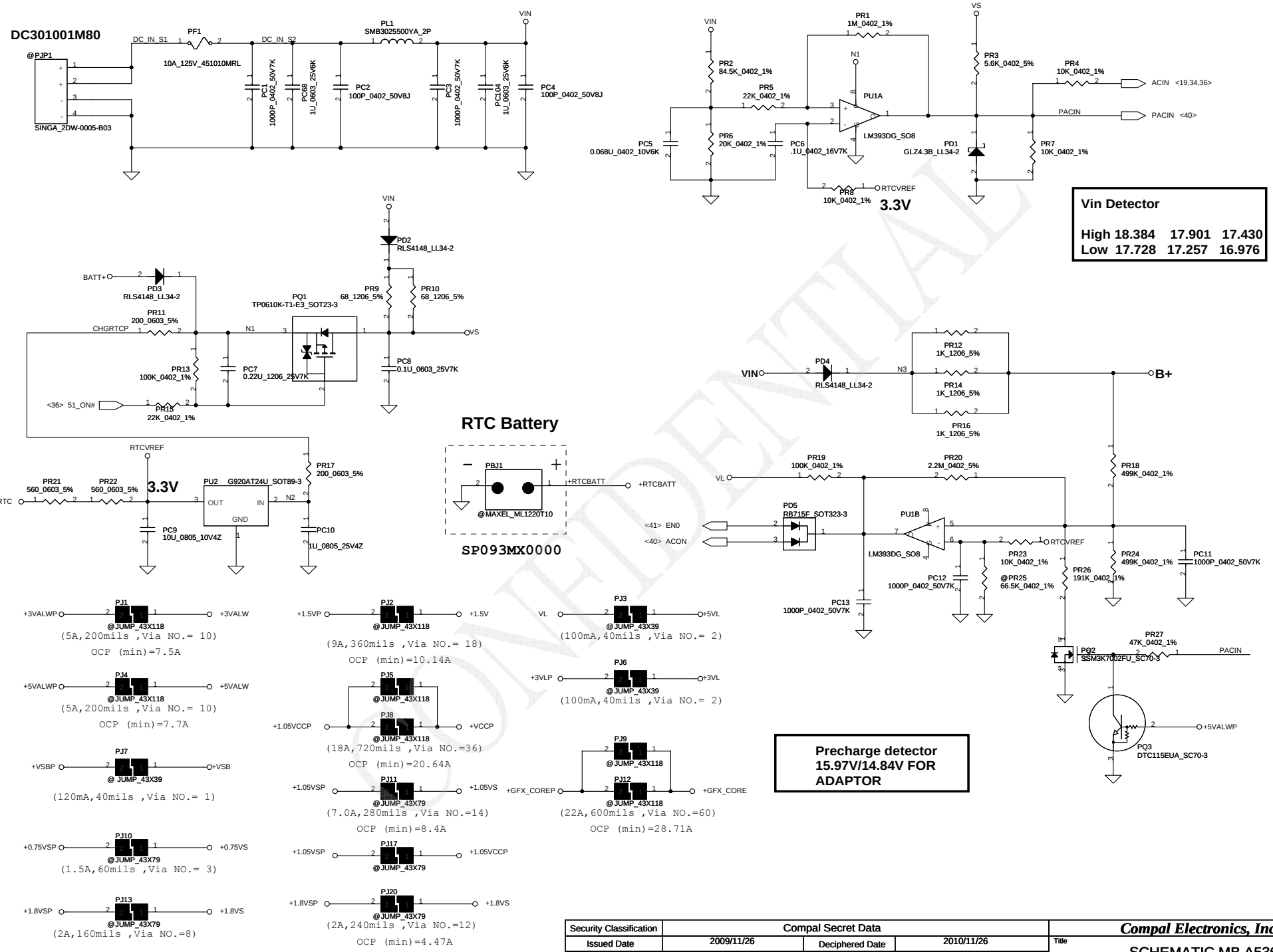

CONFIDENTIAL

Security Classification	Compal Secret Data		
Issued Date	2009/11/26	Deciphered Date	2010/11/26

THIS SHEET OF ENGINEERING DRAWING IS THE PROPRIETARY PROPERTY OF COMPAL ELECTRONICS, INC. AND CONTAINS CONFIDENTIAL AND TRADE SECRET INFORMATION. THIS SHEET MAY NOT BE TRANSFERED FROM THE CUSTODY OF THE COMPETENT DIVISION OF R&D DEPARTMENT EXCEPT AS AUTHORIZED BY COMPAL ELECTRONICS, INC. NEITHER THIS SHEET NOR THE INFORMATION IT CONTAINS MAY BE USED BY OR DISCLOSED TO ANY THIRD PARTY WITHOUT PRIOR WRITTEN CONSENT OF COMPAL ELECTRONICS, INC.

Compal Electronics, Inc.

Title: SCHEMATIC,MB A5361

Size | Document Number: 401715 | Rev: B

Date: Monday, January 11, 2010 | Sheet 38 of 52

PH1 under CPU botten side :
CPU thermal protection at 92 degree C
Recovery at 56 degree C

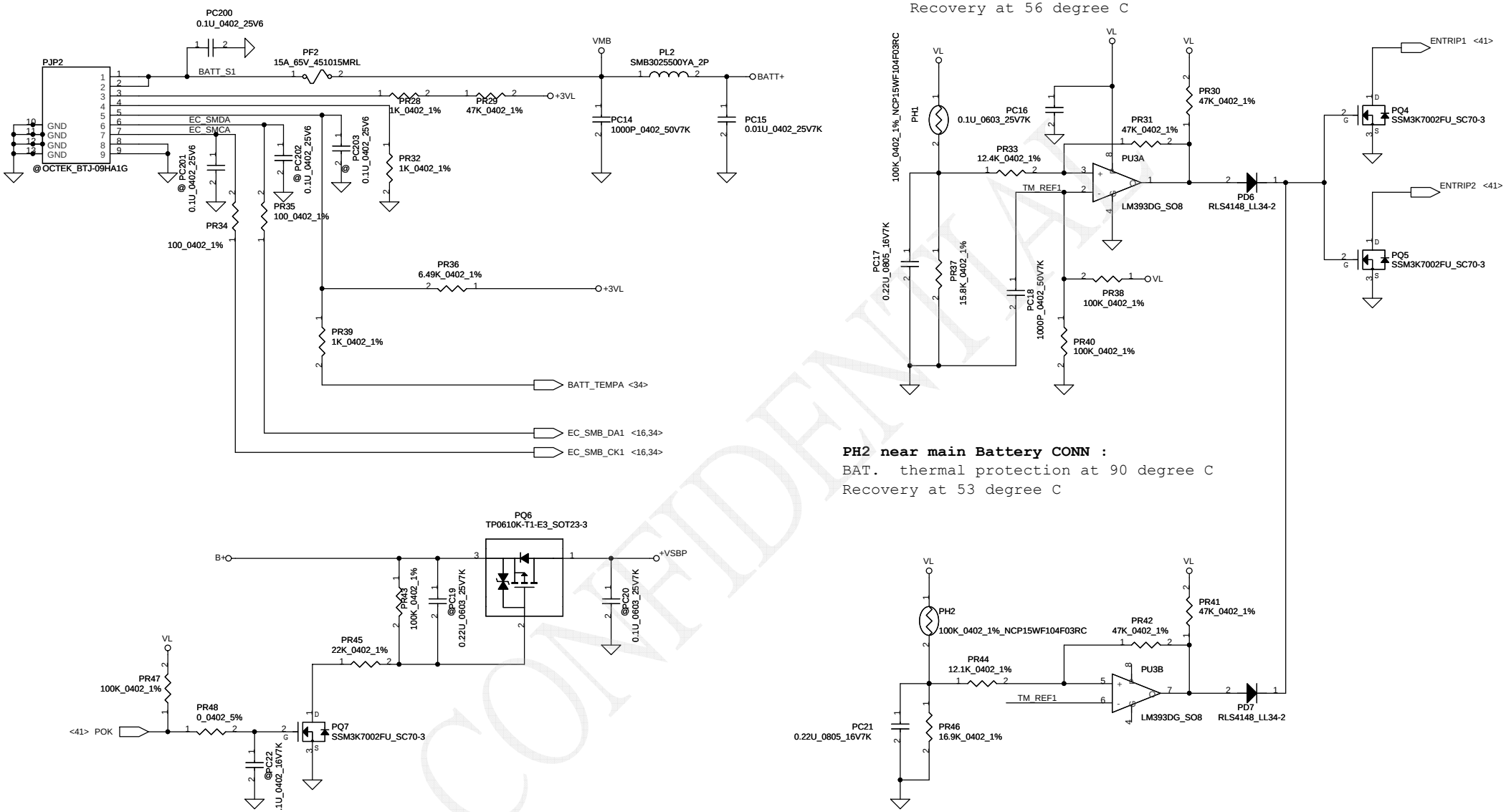

PH2 near main Battery CONN :
BAT. thermal protection at 90 degree C
Recovery at 53 degree C

CONFIDENTIAL

Security Classification	Compal Secret Data		
Issued Date	2009/11/26	Deciphered Date	2010/11/26

THIS SHEET OF ENGINEERING DRAWING IS THE PROPRIETARY PROPERTY OF COMPAL ELECTRONICS, INC. AND CONTAINS CONFIDENTIAL AND TRADE SECRET INFORMATION. THIS SHEET MAY NOT BE TRANSFERED FROM THE CUSTODY OF THE COMPETENT DIVISION OF R&D DEPARTMENT EXCEPT AS AUTHORIZED BY COMPAL ELECTRONICS, INC. NEITHER THIS SHEET NOR THE INFORMATION IT CONTAINS MAY BE USED BY OR DISCLOSED TO ANY THIRD PARTY WITHOUT PRIOR WRITTEN CONSENT OF COMPAL ELECTRONICS, INC.

Compal Electronics, Inc.

Title: SCHEMATIC,MB A5361

Size | Document Number: 401715 | Rev: B

Date: Monday, January 11, 2010 | Sheet 39 of 52

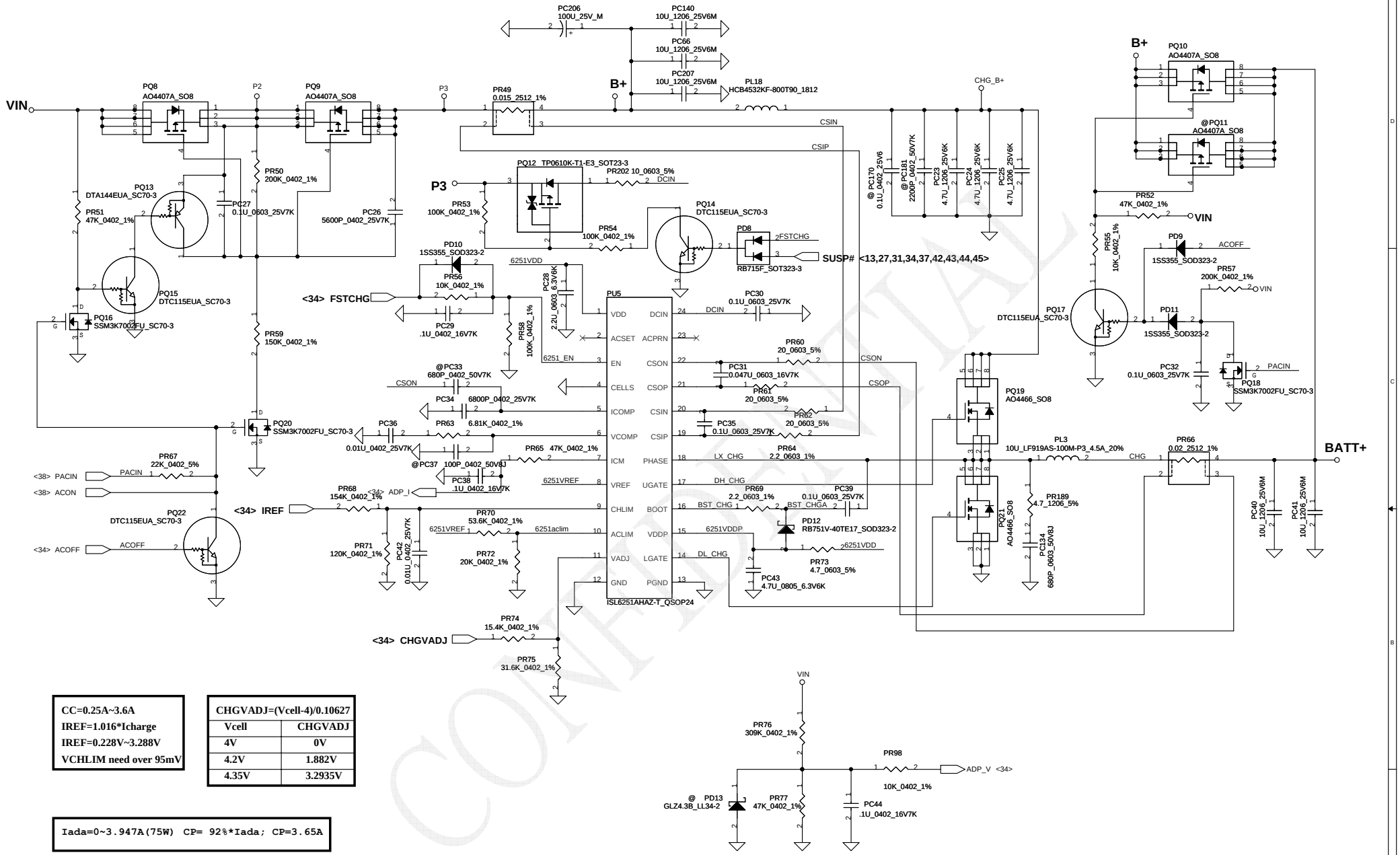

CC=0.25A~3.6A
IREF=1.016*Icharge
IREF=0.228V~3.288V
VCHLIM need over 95mV

CHGVADJ=(Vcell-4)/0.10627

Vcell	CHGVADJ
4V	0V
4.2V	1.882V
4.35V	3.2935V

Iada=0~3.947A(75W) CP= 92%*Iada; CP=3.65A

CP mode
Vaclim=2.39*(20K//152K/(20K//152K+24K//152K))=1.09986V

Iinput=(1/0.02)((0.05*Vaclm)/2.39+0.05)
where Vaclm=1.09986V, Iinput=3.65A

CELLS	VDD	GND	Float
CELL number	4	3	2

90W Iadapter=0~4.74A PR49=0.015 ohm CP=4.357A PR70=53.6K PR72=20K
120W Iadapter=0~6.32A PR49=0.015 ohm CP=5.81A PR70=8.25K PR72=26.7K

CONFIDENTIAL

Security Classification	Compal Secret Data		
Issued Date	2009/11/26	Deciphered Date	2010/11/26

THIS SHEET OF ENGINEERING DRAWING IS THE PROPRIETARY PROPERTY OF COMPAL ELECTRONICS, INC. AND CONTAINS CONFIDENTIAL AND TRADE SECRET INFORMATION. THIS SHEET MAY NOT BE TRANSFERED FROM THE CUSTODY OF THE COMPETENT DIVISION OF R&D DEPARTMENT EXCEPT AS AUTHORIZED BY COMPAL ELECTRONICS, INC. NEITHER THIS SHEET NOR THE INFORMATION IT CONTAINS MAY BE USED BY OR DISCLOSED TO ANY THIRD PARTY WITHOUT PRIOR WRITTEN CONSENT OF COMPAL ELECTRONICS, INC.

Compal Electronics, Inc.

Title: SCHEMATIC,MB A5361

Size | Document Number: 401715 | Rev: B

Date: Monday, January 11, 2010 | Sheet 40 of 52

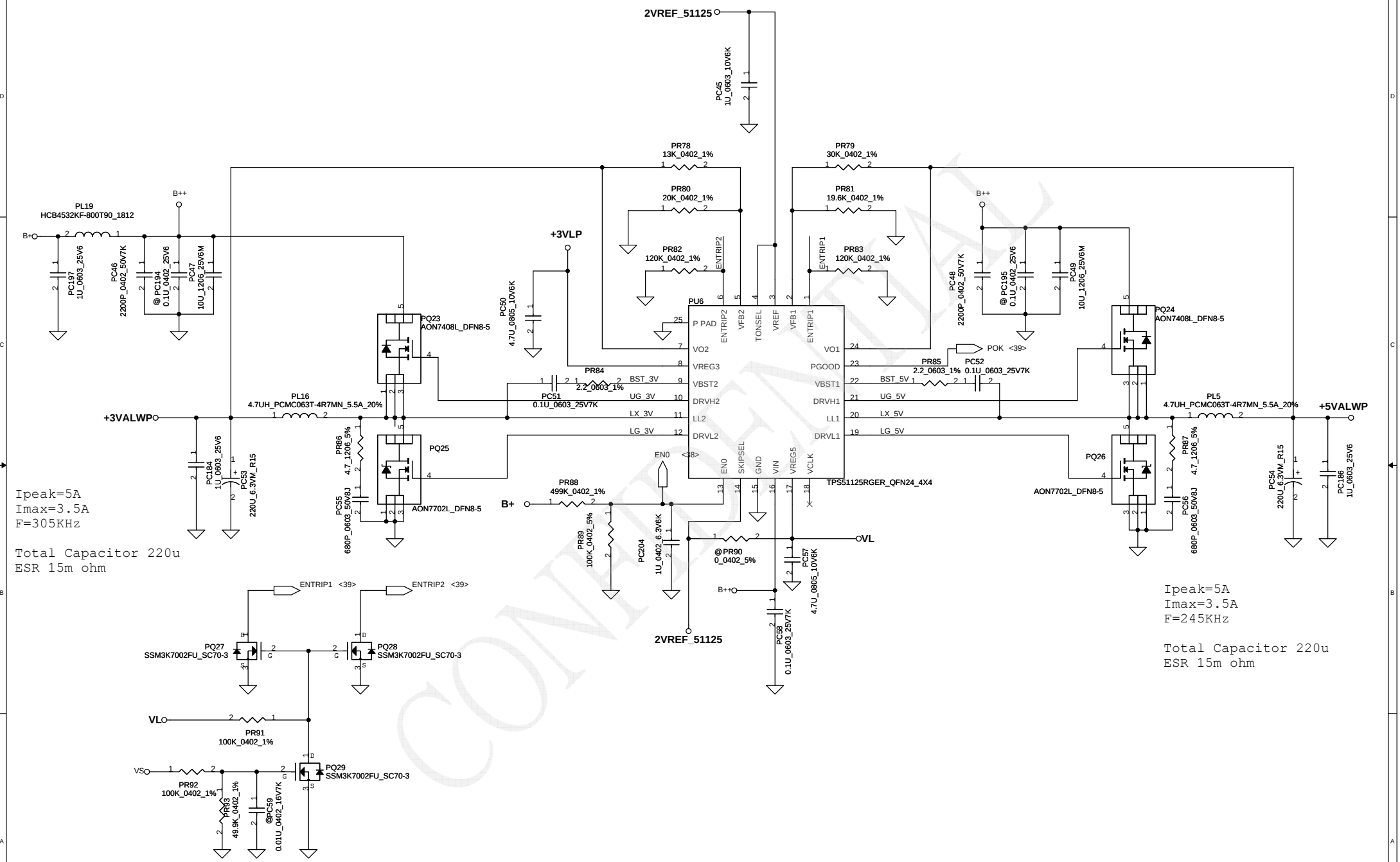

CONFIDENTIAL

Security Classification	Compal Secret Data		
Issued Date	2009/11/26	Deciphered Date	2010/11/26

THIS SHEET OF ENGINEERING DRAWING IS THE PROPRIETARY PROPERTY OF COMPAL ELECTRONICS, INC. AND CONTAINS CONFIDENTIAL AND TRADE SECRET INFORMATION. THIS SHEET MAY NOT BE TRANSFERED FROM THE CUSTODY OF THE COMPETENT DIVISION OF R&D DEPARTMENT EXCEPT AS AUTHORIZED BY COMPAL ELECTRONICS, INC. NEITHER THIS SHEET NOR THE INFORMATION IT CONTAINS MAY BE USED BY OR DISCLOSED TO ANY THIRD PARTY WITHOUT PRIOR WRITTEN CONSENT OF COMPAL ELECTRONICS, INC.

Compal Electronics, Inc.

Title: SCHEMATIC,MB A5361

Size | Document Number: 401715 | Rev: B

Date: Monday, January 11, 2010 | Sheet 41 of 52

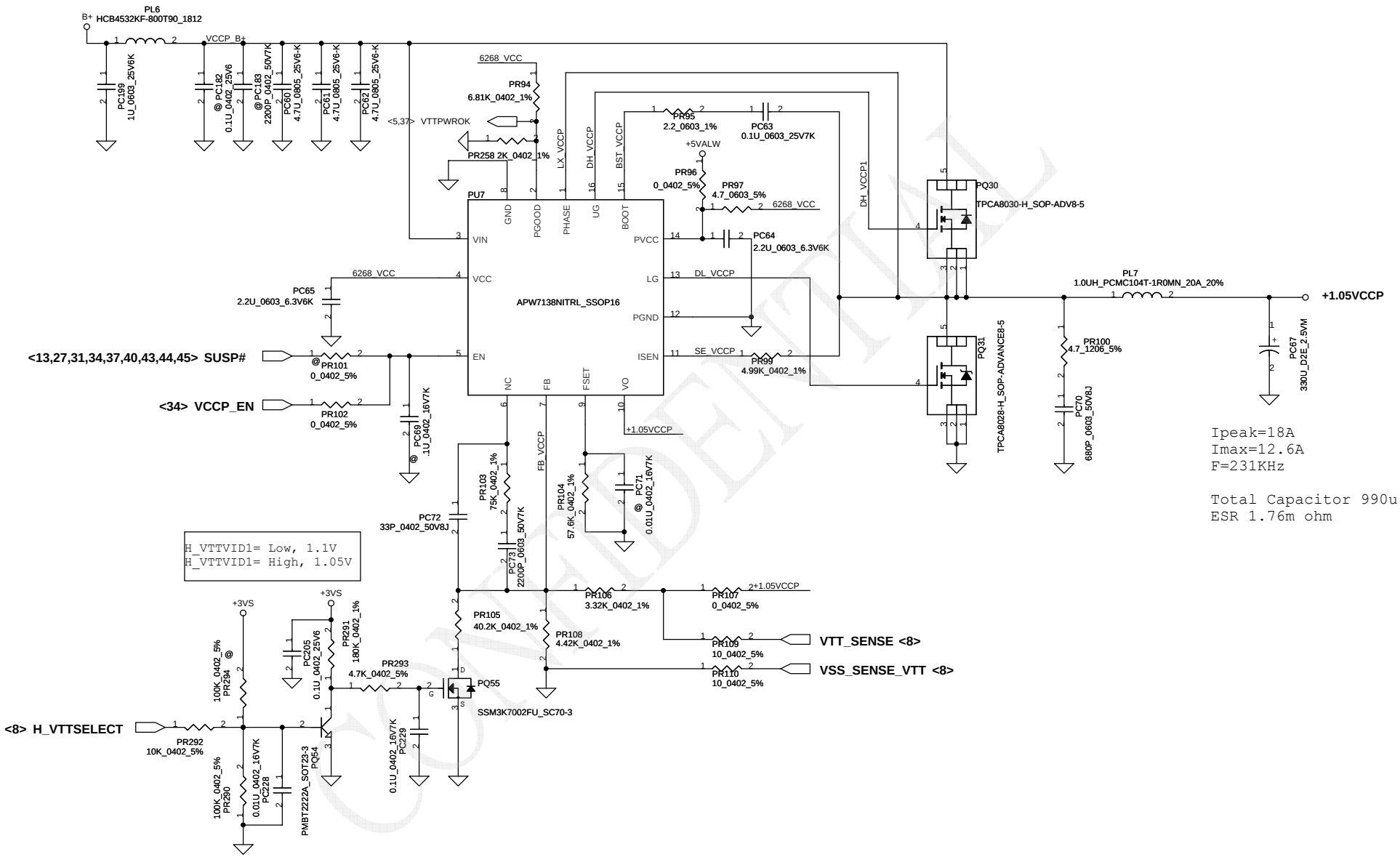

CONFIDENTIAL

Security Classification	Compal Secret Data		
Issued Date	2009/11/26	Deciphered Date	2010/11/26

THIS SHEET OF ENGINEERING DRAWING IS THE PROPRIETARY PROPERTY OF COMPAL ELECTRONICS, INC. AND CONTAINS CONFIDENTIAL AND TRADE SECRET INFORMATION. THIS SHEET MAY NOT BE TRANSFERED FROM THE CUSTODY OF THE COMPETENT DIVISION OF R&D DEPARTMENT EXCEPT AS AUTHORIZED BY COMPAL ELECTRONICS, INC. NEITHER THIS SHEET NOR THE INFORMATION IT CONTAINS MAY BE USED BY OR DISCLOSED TO ANY THIRD PARTY WITHOUT PRIOR WRITTEN CONSENT OF COMPAL ELECTRONICS, INC.

Compal Electronics, Inc.

Title: SCHEMATIC,MB A5361

Size | Document Number: 401715 | Rev: B

Date: Monday, January 11, 2010 | Sheet 42 of 52

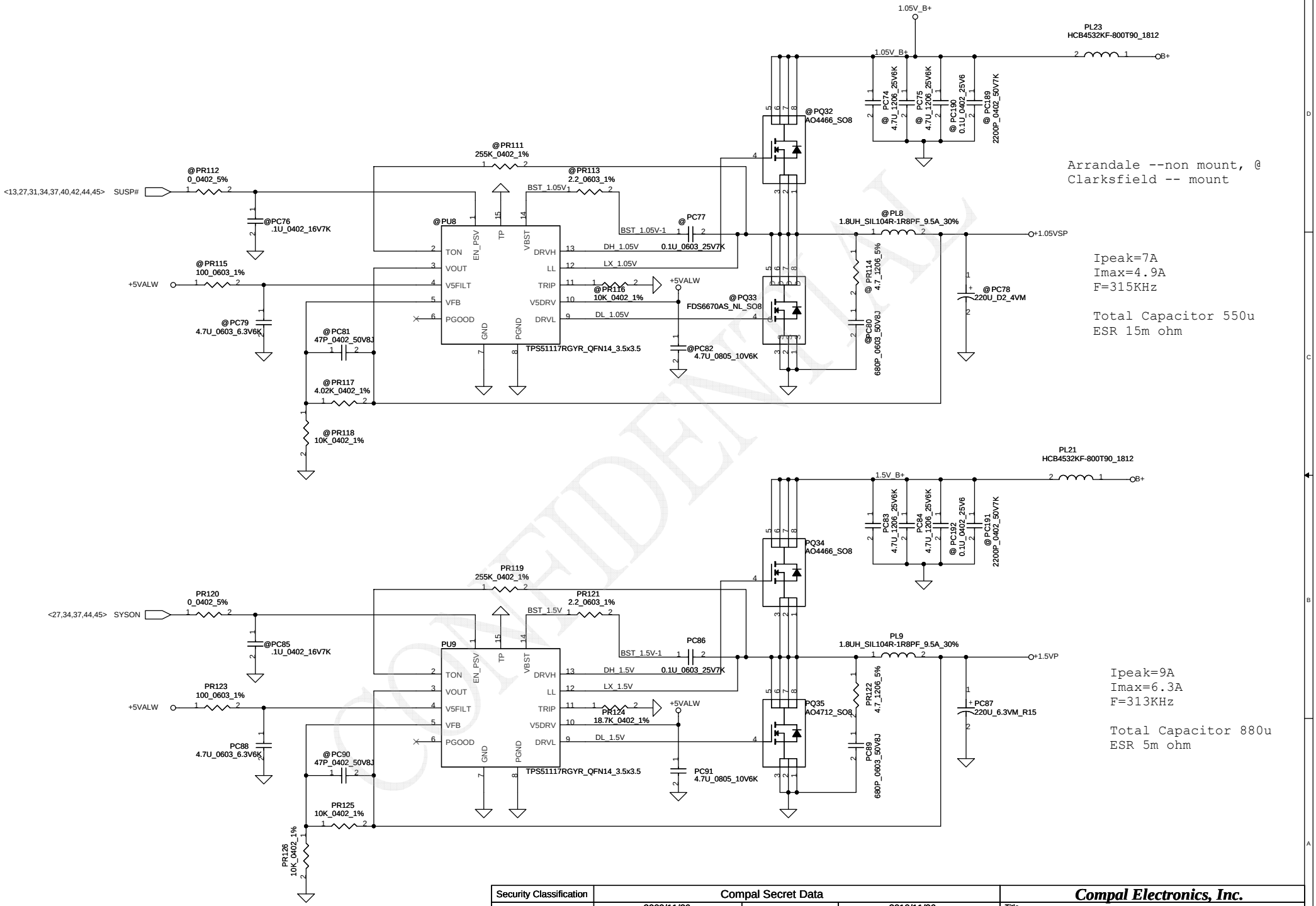

CONFIDENTIAL

Security Classification	Compal Secret Data		
Issued Date	2009/11/26	Deciphered Date	2010/11/26

THIS SHEET OF ENGINEERING DRAWING IS THE PROPRIETARY PROPERTY OF COMPAL ELECTRONICS, INC. AND CONTAINS CONFIDENTIAL AND TRADE SECRET INFORMATION. THIS SHEET MAY NOT BE TRANSFERED FROM THE CUSTODY OF THE COMPETENT DIVISION OF R&D DEPARTMENT EXCEPT AS AUTHORIZED BY COMPAL ELECTRONICS, INC. NEITHER THIS SHEET NOR THE INFORMATION IT CONTAINS MAY BE USED BY OR DISCLOSED TO ANY THIRD PARTY WITHOUT PRIOR WRITTEN CONSENT OF COMPAL ELECTRONICS, INC.

Compal Electronics, Inc.

Title: SCHEMATIC,MB A5361

Size | Document Number: 401715 | Rev: B

Date: Monday, January 11, 2010 | Sheet 43 of 52

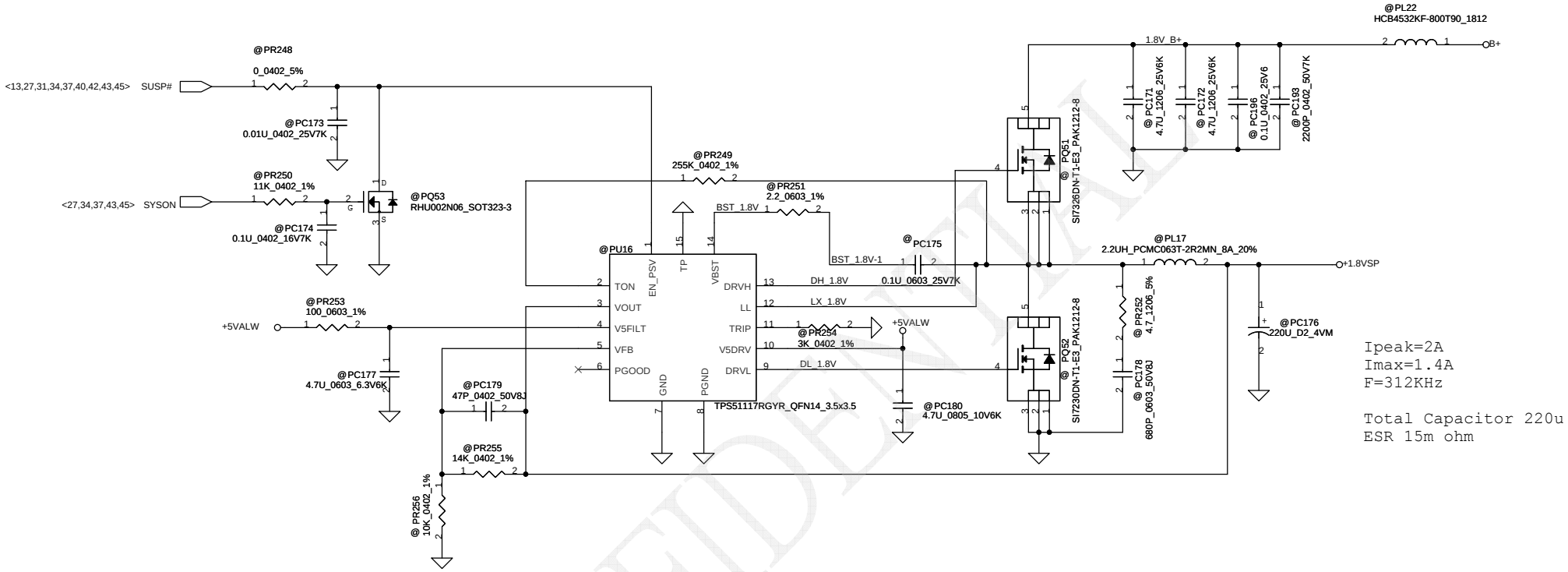

Ipeak=2A
Imax=1.4A
F=312KHz

Total Capacitor 220u
ESR 15m ohm

UMA system is unmount

CONFIDENTIAL

Security Classification	Compal Secret Data		
Issued Date	2009/11/26	Deciphered Date	2010/11/26

THIS SHEET OF ENGINEERING DRAWING IS THE PROPRIETARY PROPERTY OF COMPAL ELECTRONICS, INC. AND CONTAINS CONFIDENTIAL AND TRADE SECRET INFORMATION. THIS SHEET MAY NOT BE TRANSFERED FROM THE CUSTODY OF THE COMPETENT DIVISION OF R&D DEPARTMENT EXCEPT AS AUTHORIZED BY COMPAL ELECTRONICS, INC. NEITHER THIS SHEET NOR THE INFORMATION IT CONTAINS MAY BE USED BY OR DISCLOSED TO ANY THIRD PARTY WITHOUT PRIOR WRITTEN CONSENT OF COMPAL ELECTRONICS, INC.

Compal Electronics, Inc.

Title: SCHEMATIC,MB A5361

Size | Document Number: 401715 | Rev: B

Date: Monday, January 11, 2010 | Sheet 44 of 52

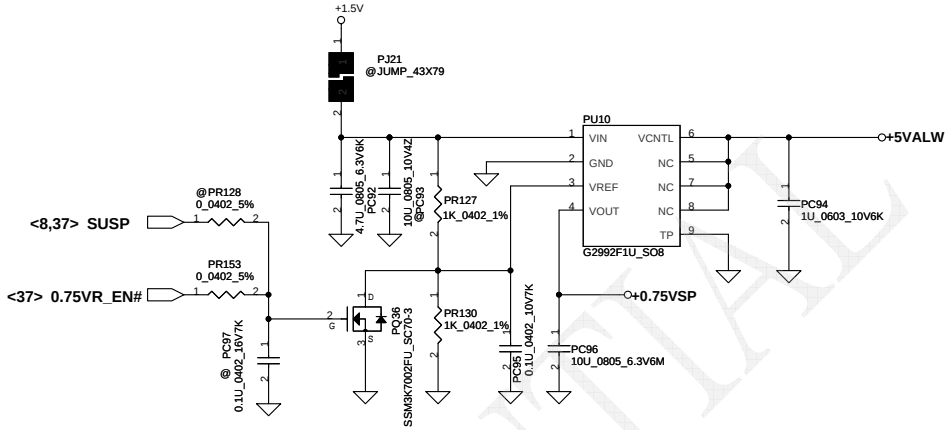

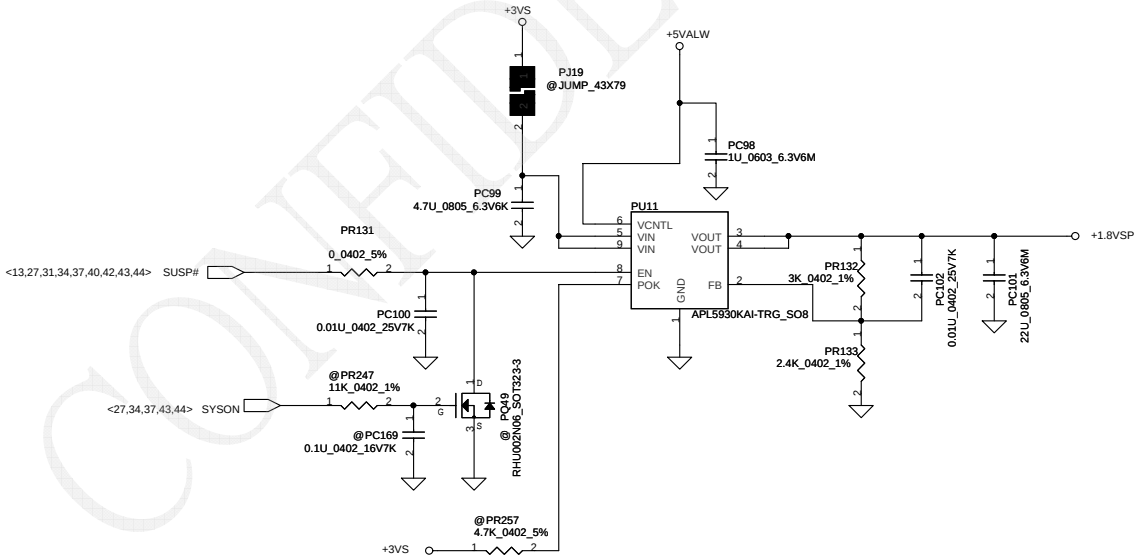

Discrete system is unmount

CONFIDENTIAL

Security Classification	Compal Secret Data		
Issued Date	2009/11/26	Deciphered Date	2010/11/26

THIS SHEET OF ENGINEERING DRAWING IS THE PROPRIETARY PROPERTY OF COMPAL ELECTRONICS, INC. AND CONTAINS CONFIDENTIAL AND TRADE SECRET INFORMATION. THIS SHEET MAY NOT BE TRANSFERED FROM THE CUSTODY OF THE COMPETENT DIVISION OF R&D DEPARTMENT EXCEPT AS AUTHORIZED BY COMPAL ELECTRONICS, INC. NEITHER THIS SHEET NOR THE INFORMATION IT CONTAINS MAY BE USED BY OR DISCLOSED TO ANY THIRD PARTY WITHOUT PRIOR WRITTEN CONSENT OF COMPAL ELECTRONICS, INC.

Compal Electronics, Inc.

Title: SCHEMATIC,MB A5361

Size | Document Number: 401715 | Rev: B

Date: Monday, January 11, 2010 | Sheet 45 of 52

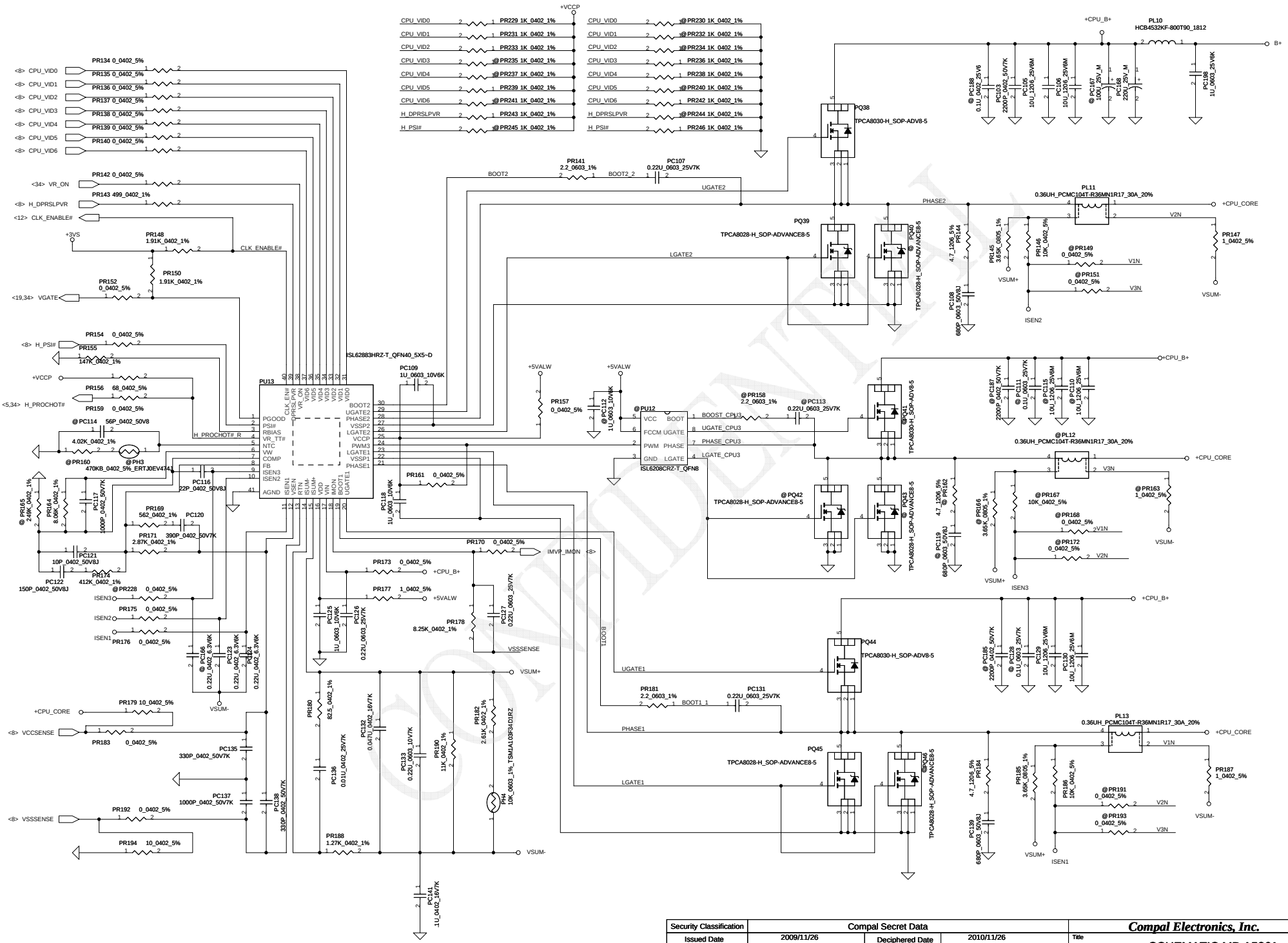

CONFIDENTIAL

Security Classification	Compal Secret Data		
Issued Date	2009/11/26	Deciphered Date	2010/11/26

THIS SHEET OF ENGINEERING DRAWING IS THE PROPRIETARY PROPERTY OF COMPAL ELECTRONICS, INC. AND CONTAINS CONFIDENTIAL AND TRADE SECRET INFORMATION. THIS SHEET MAY NOT BE TRANSFERED FROM THE CUSTODY OF THE COMPETENT DIVISION OF R&D DEPARTMENT EXCEPT AS AUTHORIZED BY COMPAL ELECTRONICS, INC. NEITHER THIS SHEET NOR THE INFORMATION IT CONTAINS MAY BE USED BY OR DISCLOSED TO ANY THIRD PARTY WITHOUT PRIOR WRITTEN CONSENT OF COMPAL ELECTRONICS, INC.

Compal Electronics, Inc.

Title: SCHEMATIC,MB A5361

Size	Document Number	Rev
C	401715	B

Date: Monday, January 11, 2010 | Sheet 46 of 52

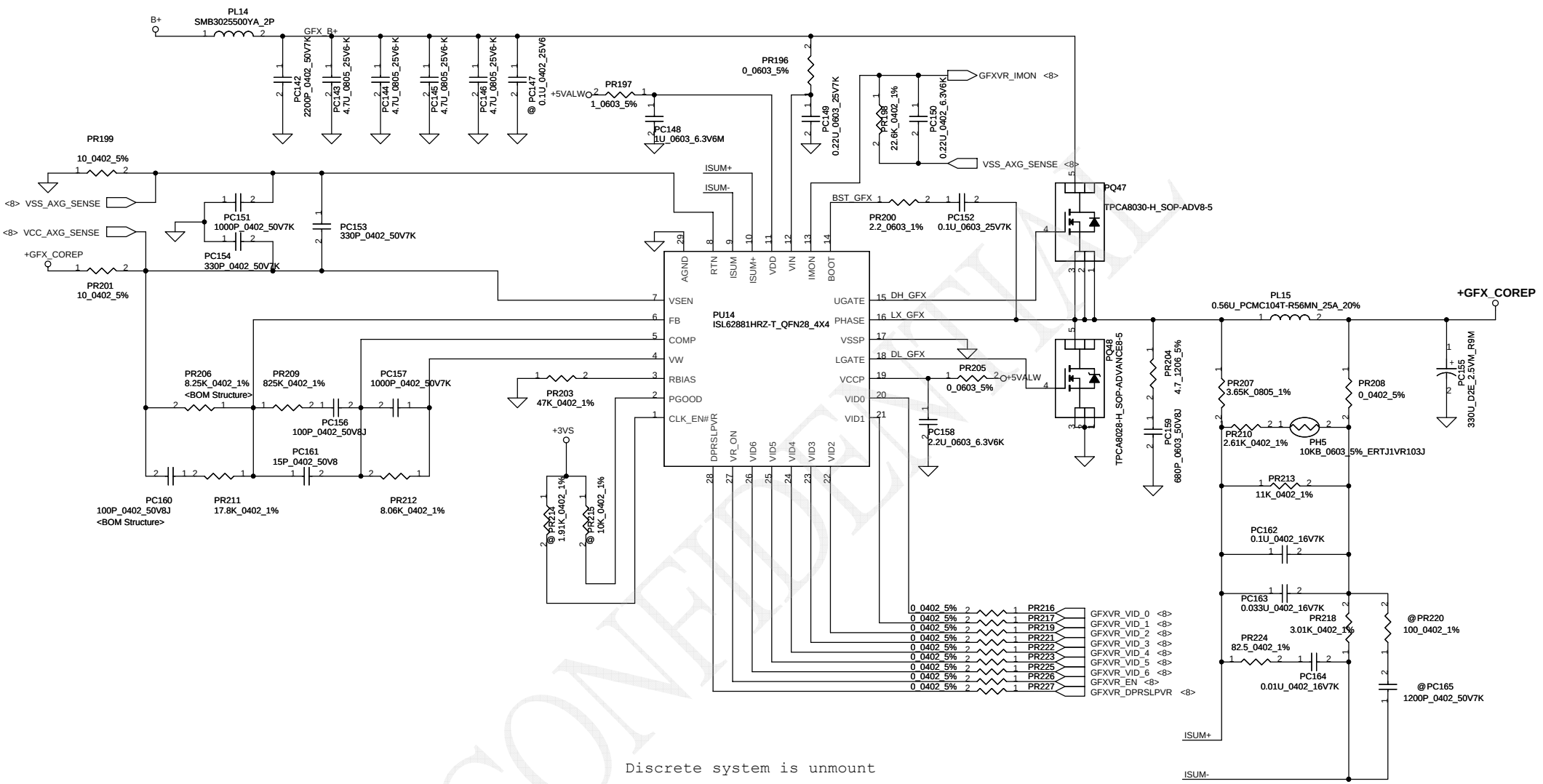

Security Classification	Compal Secret Data		
Issued Date	2009/11/26	Deciphered Date	2010/11/26

THIS SHEET OF ENGINEERING DRAWING IS THE PROPRIETARY PROPERTY OF COMPAL ELECTRONICS, INC. AND CONTAINS CONFIDENTIAL AND TRADE SECRET INFORMATION. THIS SHEET MAY NOT BE TRANSFERED FROM THE CUSTODY OF THE COMPETENT DIVISION OF R&D DEPARTMENT EXCEPT AS AUTHORIZED BY COMPAL ELECTRONICS, INC. NEITHER THIS SHEET NOR THE INFORMATION IT CONTAINS MAY BE USED BY OR DISCLOSED TO ANY THIRD PARTY WITHOUT PRIOR WRITTEN CONSENT OF COMPAL ELECTRONICS, INC.

Compal Electronics, Inc.

Title: SCHEMATIC,MB A5361

Size | Document Number: 401715 | Rev: B

Date: Monday, January 11, 2010 | Sheet 47 of 52

NO	DATE	PAGE	MODIFICATION LIST	PURPOSE
EVT		BATTERY CONN/OTP	Change PH1 and PH2 to SL200000V00	Circuit modify
EVT		BATTERY CONN/OTP	Add PC200,PC201,PC202,PC203(0.1uF_0402_1%)	EMI request
EVT		CHARGER	Change PR76 to SD034309380	Circuit modify
EVT		3VALWP/5VALWP	Change PR82 and PR83 to 120k	Circuit modify
EVT		3VALWP/5VALWP	Change P184,PC186,PC197 to SE000006900	Sourcer request
EVT		1.05V_VCCP	Change PL7 to 0.47uH_18A	Circuit modify
EVT		1.05V_VCCP	Change PR95 to 2.2 ohm,PR100 and PC70 to mount	EMI request
EVT		1.05V_VCCP	Change PC199 to SE000006900	Sourcer request
EVT		1.05VSP/1.5VP	Change PR113 to 2.2 ohm,PR114 and PC80 to mount	EMI request
EVT		1.05VSP/1.5VP	Change PR116 to 10KΩ, PR124 to 18.7KΩ	Circuit modify
EVT		CPU_CORE	Change PR141 and PR181 to 2.2 ohm, PR144,PR184,PC108 and PC139 to mount	EMI request
EVT		CPU_CORE	Change PU13 to SA00002OU00 ,PL10 to SM010018210 PC141 to SE076104K80	Circuit modify
EVT		CPU_CORE	Change PC198 to SE000006900	Sourcer request
EVT		DCIN/DECTOR	Change PC68,PC104 to SE000006900	Sourcer request
EVT		GM VGA_CORE	Change PC161 to SE071150J80 ,PC141,PC162 to SE076104K80	Circuit modify
EVT2		3VALWP/5VALWP	Change PC45 to 1uF , add PC204 (1uF_0402)	Circuit modify
EVT2		1.05V_VCCP	Change PR94 to 3.4KΩ	Circuit modify
EVT2		1.05VSP/1.5VP	Change PR115 、PR123 to 100 Ω, PC79、PC88 to 4.7uF	Circuit modify
EVT2		1.8VSP	Change PR251,PL22 to unmount	Circuit modify
EVT2		0.75VSP/1.8VSP	Change PR132 to 3K Ω, PR133 to 2.4KΩ	Circuit modify
EVT2		CPU_CORE	Change PR150 to 1.91K Ω, PC132、PC124 to SE124224K80, PC140、PR195 to unmount, PC107 、PC131 to 0.22uF delete PR160、PH3	Circuit modify
EVT2		GM VGA_CORE	Change PC149 to 0.22U_0603_25V,PL15 to 0.56U_25A_20% PR206 to 8.25KΩ ,PR220,PC165 to unmount	Circuit modify
EVT2		1.8VSP	mount PWM circuit	For Discrete system
EVT2		0.75VSP/1.8VSP	mount LDO circuit	For UMA system
PVT		1.05V_VCCP	Change PR99 to 4.99KΩ,PU7 to APW7138,PC71 to unmount PQ55 to SB000009610,PL7 to 1uH_10*10*4 PR94 to 3.4K ohm,PR258 to 1K ohm Delete PC66 Add PC205(0.1uF_0402)	Circuit modify
PVT		1.05V_VCCP		ESD request
PVT		1.05V_VCCP	Unmount PQ54,PQ55,PC205,PC228,PC229,PR105,PR290,PR291 ,PR292,PR293,PR294,	For UMA system
PVT		0.75VSP/1.8VSP	Change PQ36 to SB000009610,PC92 to 4.7uF, PU11 to APL5930, signal 0.75VR_EN to 0.75VR_EN#, SUSP# to SUSP,Delete PQ37,PR129	Circuit modify
PVT		GM VGA_CORE	unmount GM VGA_CORE circuit Delete GFXVR_PWRGD signal	For Discrete system
PVT		BATTERY CONN/OTP	Change PR33 to 12.4K ohm,PR37 to 15.8K ohm PR29 pin2,PR36 pin1 connect to+3VL	Circuit modify
PVT		CPU_CORE	Change PC132 to SE076473K80, PL11,PL12,PL13 to SH00000HK00 (DCR 5%)	Circuit modify
PVT		1.05VSP/1.5VP	Change PJ14 to PL23, PR117 to 4.02K ohm, PR118,PR125, PR126 to 10K ohm, PR121,PR122,PC89 to mount	Circuit modify
PVT		CHARGER	ADD PC206,PC66,PC140,PC207(unmount)	EMI request
PVT		CHARGER	Change PR64,PR69 to 2.2_0603_1%, PR189,PR134 to mount	Circuit modify
PVT		CHARGER	Change PR70 to 75K ohm, PQ9 to AO4407A	For UMA system
PVT		1.8VSP	Change PR255 to 14K ohm,PR256 to10K ohm,PR251 to 2.2 ohm	For Discrete system
PVT		3VALWP/5VALWP	Change PR84,PR85 to 2.2_0603_1%, mount PR86,PR87,PC55,PC56	Circuit modify
Pre MP		BATTERY CONN/OTP	Change PC19 to 0.22U_0603_25V	Circuit modify
Pre MP		BATTERY CONN/OTP	Change PR44 to 12.1K ohm	Battery OTP modify
Pre MP		1.05V_VCCP	Change PR94 to 6.81K ohm,PR258 to 2K ohm PR101 to unmount,PR102 to mount	HW request
Pre MP		1.05V_VCCP	Unmount PQ54,PQ55,PC205,PC228,PC229,PR105,PR290,PR291 ,PR292,PR293,PR294,	For Discrete system
Pre MP		0.75VSP/1.8VSP	Change PR128 to unmount,PR153 to mount	HW request
Pre MP		CPU_CORE	Change PR171 to 2.87K ohm,PR188 to 1.27K ohm	CPU_CORE OCP modify
Pre MP		CHARGER	Add PC66,PC140,PC206,PC207	EMI request
Pre MP		1.05VSP/1.5VP	Unmount 1.05VSP circuit	For cost down
Pre MP		1.05VSP/1.5VP	Add PL23	For DIS SKU HW request

CONFIDENTIAL

Security Classification	Compal Secret Data		
Issued Date	2009/11/26	Deciphered Date	2010/11/26

THIS SHEET OF ENGINEERING DRAWING IS THE PROPRIETARY PROPERTY OF COMPAL ELECTRONICS, INC. AND CONTAINS CONFIDENTIAL AND TRADE SECRET INFORMATION. THIS SHEET MAY NOT BE TRANSFERED FROM THE CUSTODY OF THE COMPETENT DIVISION OF R&D DEPARTMENT EXCEPT AS AUTHORIZED BY COMPAL ELECTRONICS, INC. NEITHER THIS SHEET NOR THE INFORMATION IT CONTAINS MAY BE USED BY OR DISCLOSED TO ANY THIRD PARTY WITHOUT PRIOR WRITTEN CONSENT OF COMPAL ELECTRONICS, INC.

Compal Electronics, Inc.

Title: SCHEMATIC,MB A5361

Size: Custom | Document Number: 401715 | Rev: B

Date: Monday, January 11, 2010 | Sheet 48 of 52

ISPD

PCB	ZZZ	PCB LA-5361P REV10
DC-IN	PJP1	PJP1 45@
Trans former	UL3	10/100M transformer 8103EL@
LAN	UL1	8103EL 8103EL@
SB_GL_R1	U5	PCH HM55R1@

CONFIDENTIAL

Security Classification	Compal Secret Data		
Issued Date	2009/11/26	Deciphered Date	2010/11/26

THIS SHEET OF ENGINEERING DRAWING IS THE PROPRIETARY PROPERTY OF COMPAL ELECTRONICS, INC. AND CONTAINS CONFIDENTIAL AND TRADE SECRET INFORMATION. THIS SHEET MAY NOT BE TRANSFERED FROM THE CUSTODY OF THE COMPETENT DIVISION OF R&D DEPARTMENT EXCEPT AS AUTHORIZED BY COMPAL ELECTRONICS, INC. NEITHER THIS SHEET NOR THE INFORMATION IT CONTAINS MAY BE USED BY OR DISCLOSED TO ANY THIRD PARTY WITHOUT PRIOR WRITTEN CONSENT OF COMPAL ELECTRONICS, INC.

Compal Electronics, Inc.

Title: SCHEMATIC,MB A5361

Size: D | Document Number: 401715 | Rev: B

Date: Monday, January 11, 2010 | Sheet 49 of 52

Revision Change: 0.2 to 0.3

NO	DATE	PAGE	MODIFICATION LIST	PURPOSE
1	7/1	36	Mount Q193	LVDS Display
2	7/1	12	Mount : R91, Unmount : R89, C925, C918, L92	Co-layout GEN for low power component
3	7/1	21	U5.BC38 Change UMA_HDMI_TX2+ to UMA_HDMI_TX0+ U5.BD38 Change UMA_HDMI_TX2- to UMA_HDMI_TX0- U5.BD40 Change UMA_HDMI_TX0+ to UMA_HDMI_TX2+ U5.BE40 Change UMA_HDMI_TX0- to UMA_HDMI_TX2-	Modify HDMI Trace
4	7/1	18	Mount Socket U59A , Unmount U59	BIOS Interface Change
5	7/1	21	U61.2 Change DDPD_CTRLCLK to DDPD_CTRLDATA U61.5 Change DDPD_CTRLDATA to DDPD_CTRLCLK	Modify DP Dongle Trace
6	7/1	29	Add CN8	Power Solution
7	7/1	32	Mount (0.01uF) CL34, CL35	EMI Solution
8	7/1	39	Mount (0.1uF) : C847, C842, C843, C844, C845, C846	ESD Solution
9	7/1	21	Remove R1291, R1293	BIOS Interface Change
10	7/1	9	Add (22uF) C189, C193, C210, C211, C258, C222, C260, C259, C262, C261, C264, C263, C268, C265, C269, C267	Modify CPU_CORE Quality
11	7/1	13	Mount : R1427, C485, R1414, R1415, R1389	Display for Discrete
12	7/1	15	mount (Discrete): R1400, R1401, R1396	Display for Discrete
13	7/1	16	Remove : R134, R135, RV37, RV79	Cost Down
14	7/1	28	Change C350 150uF to 330uF	USB Power Stable
15	7/1	36	Mount Q193	LVDS Display
16	7/1	5	Change R32 3K to 750	S3 Power Saving
17	7/1	5	Mount : R7, R416, R879, D6, C111, U141, PQ56 Umount : R189	S3 Power Saving
18	7/1	8	Mount : Q194, C209, R1407, Q206, R1429, C936, R1408	S3 Power Saving
19	7/1	10	Mount : R60, PQ57, PQ58 , Unmount : R61, R62	S3 Power Saving
20	7/1	39	Mount : PQ60, R1442	S3 Power Saving
21	7/1	39	Add : R1403, R1393, Q192, C839, R1406, R1405	ATI / nVidia Common
22	7/1	21	Add (0.1uF) C934,C935	Add AC decoupling for DP
23	7/1	14	mount : R1440, Mount (Discrete) : R1382, R1392	Display for Discrete
24	7/1	14	Remove : Q195, R1439, R1441	LCDS Inverter Control
25	7/1	14	Change R1189 2.2K to 100K	LVDS Control
26	7/1	39	JCPU.AJ1, JCPU.AF1, JCPU.AE7, JCPU.AE4, JCPU.AC1, JCPU.AB7, JCPU.AB4, JCPU.Y1, JCPU.W7, JCPU.W4, JCPU.U1, JCPU.T7, JCPU.T4, JCPU.P1, JCPU.N7, JCPU.N4, JCPU.L1, JCPU.H1 Change +1.5V to +1.5V_CPU	S3 Power Change
26	8/20	8	C35, C36, C39, C40, C923, C932, C933	BOM Control for GM@
27	8/20	22	R239	Move form P27 to P22
28	8/20	27	JBW, C287, C288, C289, C290, C286, R240, R239, C281, C282, C283, C284, C285, C137	Remove all of components for Braidwood
29	8/20	35	Change RC12, RC13, RC14 from 22 ohm to Bead 120 ohm	For EMI request
30	9/1	34	Add C112	For EMI request
31	9/1	34	Add C794, C820	For EMI request
32	9/1	17	Remove R159, R160, R161, R162, C251, C252, C253, C254	Common Function (NSWAA)
33	9/1	14	Add R1190 (100K)	Solve leakage for+3VS
34	9/1	20	Add R1242 (1K)	Reset function
35	9/1	23	R1331 from +3VS to +3VALW	Change Power Plane
36	9/1	23	R1326 replace 10K to 100K	Solve leakage for CIR
36	9/1	23	R1326 replace 10K to 100K	Solve leakage for CIR

CONFIDENTIAL

THIS SHEET OF ENGINEERING DRAWING IS THE PROPRIETARY PROPERTY OF COMPAL ELECTRONICS, INC. AND CONTAINS CONFIDENTIAL AND TRADE SECRET INFORMATION. THIS SHEET MAY NOT BE TRANSFERED FROM THE CUSTODY OF THE COMPETENT DIVISION OF R&D DEPARTMENT EXCEPT AS AUTHORIZED BY COMPAL ELECTRONICS, INC. NEITHER THIS SHEET NOR THE INFORMATION IT CONTAINS MAY BE USED BY OR DISCLOSED TO ANY THIRD PARTY WITHOUT PRIOR WRITTEN CONSENT OF COMPAL ELECTRONICS, INC.

NO	DATE	PAGE	MODIFICATION LIST	PURPOSE
PVT		P05-Auburndale(1/5/)-JTAG/XDP	R189 from always to @	for ITEL S3 reduce solution
			PQ56 change to P/N: SB501380020 (BSS138_NL_SOT23-3)	for ITEL S3 reduce solution demand
PVT		P08-Auburndale(4/5)-PWR	Add C937~C938	for ITEL S3 reduce solution demand
			Change R1408 from 100k to 470ohm	for meet INTEL S3 reduce sequence
PVT		P10-DDRIII-SODIMM0	Add R1479, R1480, R1481, R1482	for INTEL CFD CPU +S3 reduce solution
PVT		P13-MXM connector	Remove DP fuction	
			Remove VGA_SPDIF signal.	GPU don't need SPDIF
PVT		P14-LVDS	Remove R1340 ~ R1355	for layout routing.
			Change R626 from GM@ to always mount.	for LVDS POWER ENVDD
PVT		P16- HDMI Conn.	Change R1394 from HDMI@ to PM@	for Discrete SKU without HDMI
PVT		P18-IBEX-M(2/9)-PCI-E/SMBUS/CLK	U59 Change to 4MB size	for SW demand
PVT		P19-IBEX-M(3/9)-DMI/GPIO/LVDS	R1248 Change to @	
			Reserve C953 180pF	for VGATE to avoid noise
PVT		P19-IBEX-M(3/9)-DMI/GPIO/LVDS	R1248 Change to @	
			Reserve C953 180pF	for VGATE to avoid noise
PVT		P21-IBEX-M(5/9)-PCI/USB/NAND	R1235 Change from IDP@ to @	Common with NSWAA
			Add R1475	Common with NSWAA
PVT		P22-IBEX-M(6/9)-CPU/GPIO	Add VGA_HDMI_HPD to PCH	Common with NSWAA
			Change GPIO17 to 3G_off#, del R1282	Add 3G control Signal
			Change R1261 from 0ohm to 56ohm	Intel Spec
PVT		P26-HDD/SSD/ODD/eSATA/USB Conn	Reserve C952	for IMIC to reduce +5VS noise
PVT		P27-NEW CARD/BCAS	Add Choke L93 R1477 R1478	for EMI demand
			CB1 change from 4.7uF_0603 to 0.1uF_0402	for BCAS ISSUE
			RB5 change from 33k_0402 to 47k_0402	for BCAS ISSUE
			CB2 change from 0.033uF_0402 to 0.01uF_0402	for BCAS ISSUE
PVT		P29-PCIe-WLAN/GPS/TV/UWB	Change DM5 power to +3VS	for LAYOUT
			Change RM5 pull high to +3VS	for LAYOUT
			Change JGPS.20 to 3G_off#, add R1483.	for 3G control
PVT		P30-PCIe-RTL8103EL/RTL8111DL	Reserve R1476	for LOW POWER LAN IC: ISOLATE function
			Reserve CL45, CL46	for EMI ISN LAN test
PVT		P32-AMP/Audio Jack/HP/SPK	UA3 change to connector GND instead of GNDA	for LAYOUT
			Remove VGA_SPDIF signal. Remove LA11	GPU don't need SPDIF
			Add RA35, RA36	for internal MIC experiment
PVT		P33-JM385 CardReader	Add thermalpad pin and connect to GND for UC1	LAYOUT Modify
			UC1 P/N change from SA00003IL00 to SA00003G010	for BOM
PVT		P35-ROM/LID/Debug PORT/GSENSOR	U46 Change to 256KB	for EC demand
PVT		P37-DC INTERFACE	Add C941~C951 for ESD demand	for ESD demand
			Change R1447 from 470ohm to 47ohm	for meet INTEL S3 reduce sequence

CONFIDENTIAL

Security Classification	Compal Secret Data		
Issued Date	2009/11/26	Deciphered Date	2010/11/26

THIS SHEET OF ENGINEERING DRAWING IS THE PROPRIETARY PROPERTY OF COMPAL ELECTRONICS, INC. AND CONTAINS CONFIDENTIAL AND TRADE SECRET INFORMATION. THIS SHEET MAY NOT BE TRANSFERED FROM THE CUSTODY OF THE COMPETENT DIVISION OF R&D DEPARTMENT EXCEPT AS AUTHORIZED BY COMPAL ELECTRONICS, INC. NEITHER THIS SHEET NOR THE INFORMATION IT CONTAINS MAY BE USED BY OR DISCLOSED TO ANY THIRD PARTY WITHOUT PRIOR WRITTEN CONSENT OF COMPAL ELECTRONICS, INC.

Compal Electronics, Inc.

Title: SCHEMATIC,MB A5361

Size: Custom | Document Number: 401715 | Rev: B

Date: Monday, January 11, 2010 | Sheet 51 of 52

NO DATE	PAGE	MODIFICATION LIST	PURPOSE
PRE-MP	P05-Auburndale(1/5/)-JTAG/XDP	Change R189 from @ to always mount.	for ITEL S3 reduce solution demand
		D6 change to to SCS00004000	for ITEL S3 reduce solution demand
		Add R1488	for ITEL S3 reduce solution demand
		Reserve C954 for DRAMPWROK	for ITEL S3 reduce solution demand
PRE-MP	P08-Auburndale(4/5)-PWR	Change R49 to SD028330080	for +GFX_CORE Power down glitch
PRE-MP	P10-DDRIII-SODIMM	Reserve C955 for SM_DRAMRST#	for ITEL S3 reduce solution demand
PRE-MP	P14-LVDS	Change R1439 to GM@, R1440 to PM@	for Intel DTST function
		Add C958 for LCD_BL_PWM	by ESD demand
		Change R626 to GM@ 100Kohm, PM@ 10Kohm	
PRE-MP	P15-CRT	Change L18, L19, L20 to SM01000DS00	for Layout
		footprint:CHILI_NBQ100505T-800Y-N_2P	
		L21, L22 footprint change to R_0402	for Layout
PRE-MP	P16- HDMI Conn.	Change HDMI Common Choke to 120ohm	by EMI demand
		WCM-2012-121T SM070000N00	
		Change D54, R571 BOM Structure from HDMI@ to H@	for HDMI CEC TVAP
		Change R1394 BOM Structure from PM@ to H@ for HMDI HPD.	
		Add R442, R443 to reduce DIS DDC cap value	
PRE-MP	P17-IBEX-M(1/9)-HDA/JTAG/SATA	Remove U59A	
		Change C205, C204 from 18pF to 15pF	for RTC CLK
PRE-MP	P18-IBEX-M(2/9)-PCI-E/SMBUS/CLK	Change UWB_OFF# from EC to PCH GPIO67	
		Change R1230 from PM@ to @	DIS SKU DON'T NEED DCI
		Change R1216, Y3, C869, C225 to GM@	DIS SKU DON'T NEED DCI
		Set C869 PM@ 0ohm when Dis SKU	DIS SKU DON'T NEED DCI
PRE-MP	P19-IBEX-M(3/9)-DMI/GPIO/LVDS	Change UWB_OFF# from EC to PCH GPIO67	
		Change R1230 from PM@ to @	DIS SKU DON'T NEED DCI
		Change R1216, Y3, C869, C225 to GM@	DIS SKU DON'T NEED DCI
		Set C869 PM@ 0ohm when Dis SKU	DIS SKU DON'T NEED DCI
		R1239 change from 1Kohm to 10Kohm.	
PRE-MP	P20-IBEX-M(4/9)-CRT/LVDS/HDMI	Reserve R1490	for UMA HDMI
PRE-MP	P21-IBEX-M(5/9)-PCI/USB/NAND	Change R1269, R1270, R1272, to SD028470A80	for GREEN BOM
PRE-MP	P22-IBEX-M(6/9)-CPU/GPIO	Change TEMP_ALERT# pull high to +3VS	
		Reserve C957 for RST_GATE	for ITEL S3 reduce solution demand
		Change C957 from 1000pF to 47nF (SE076473K80)	for ITEL S3 reduce solution demand
		Change C957 to PS@	for ITEL S3 reduce solution demand
PRE-MP	P29-PCIe-WLAN/GPS/TV/UWB	Change Touch Screen USB to port12.	
PRE-MP	P30-PCIe-RTL8103EL/RTL8111DL	Change UL1 8111DL@ to SA00002UV10	for low power LAN IC
		and UL1 8103EL@ to SA00002XC10	for low power LAN IC
PRE-MP	P31-HDA-ALC272	Add C960 for AZ_RST_HD#	by ESD demand
PRE-MP	P32-AMP/Audio Jack/HP/SPK	Change UA3 GND to GNDA	
PRE-MP	P33-JM385 CardReader	Add C959 for PLT_RST#	by ESD demand
PRE-MP	P34-LPC-EC-KB926	Change EC.26pin to H_PROCHOT#_EC	
		and add R1489 for H_PROCHOT#	
PRE-MP	P35-ROM/LID/Debug PORT/GSENSOR	Change U34 to SA00003GI00	
		Change C647 from 10pF to 0.1uF	by ESD demand
PRE-MP	P36-Switchs,Connectors & LED	Q56 change from SB570020020 to SB00000M700	
		Reserve D88, R444, R445	by ESD demand
PRE-MP	P37-DC INTERFACE	Q198, Q201, Q207 change to SB00000EO00	
		Change R1447 to SD002470A80 for GREEN BOM	

CONFIDENTIAL

Security Classification	Compal Secret Data		
Issued Date	2009/11/26	Deciphered Date	2010/11/26

THIS SHEET OF ENGINEERING DRAWING IS THE PROPRIETARY PROPERTY OF COMPAL ELECTRONICS, INC. AND CONTAINS CONFIDENTIAL AND TRADE SECRET INFORMATION. THIS SHEET MAY NOT BE TRANSFERED FROM THE CUSTODY OF THE COMPETENT DIVISION OF R&D DEPARTMENT EXCEPT AS AUTHORIZED BY COMPAL ELECTRONICS, INC. NEITHER THIS SHEET NOR THE INFORMATION IT CONTAINS MAY BE USED BY OR DISCLOSED TO ANY THIRD PARTY WITHOUT PRIOR WRITTEN CONSENT OF COMPAL ELECTRONICS, INC.

Compal Electronics, Inc.

Title: SCHEMATIC,MB A5361

Size: Custom | Document Number: 401715 | Rev: B

Date: Monday, January 11, 2010 | Sheet 52 of 52